CONTRACT DOCUMENTS
FOR
LA 44 AT PARKER ROAD / LA 933 TURN LANE
MA-22-05

ASCENSION PARISH

PARISH PRESIDENT
Clint Cointment

COUNCIL MEMBERS

Alvin Thomas, Jr., District 1
Joel Robert, District 2
Travis Turner, District 3
Corey Orgeron, District 4
Dempsey Lambert, District 5
Chase Melancon, District 6
Aaron Lawler, District 7
Teri Casso, District 8
Dal Waguespack, District 9
John Cagnolatti, District 10
Michael Mason, District 11

STATE OF LOUISIANA
DUSTIN J. MAYARD
REG. No. 42123
REGISTERED
PROFESSIONAL ENGINEER
CIVIL ENGINEERING
6/24/2024

June 2024

Prepared by McKim & Creed

for

<u>Ascension Parish Engineering Transportation Department</u>
<u>Department of Public Works East</u>
<u>42077 Churchpoint Road Gonzales, Louisiana</u>

MOVE ASCENSION PROJECT NO. MA-22-04
TABLE OF CONTENTS

	Page No.
Title Sheet	A1
Table of Contents	B1
Invitation to Bidders	C1-C3
General Conditions	D1-D135
Technical Specifications and Supplemental Conditions …….	E1-E6
Special Provisions	F1-F2
Plans (63 sheets) –…….....	G1-G63
Sampling and Testing Plan……	H1-H104

PARISH OF ASCENSION
PURCHASING

615 E Worthey Rd.
Gonzales, LA. 70737
(225) 450-1200
www.ascensionparish.net

Clint Cointment
Parish President

BID NOTICE

Sealed bids will be received by Ascension Parish Government at the Ascension Parish Government Purchasing Office, 615 E. Worthey Street, Gonzales, Louisiana 70737 until **10:00 a.m. CDT** on **July 23, 2024**. Bids received after the closure time, as stated herein, will be returned unopened. Bids will be publicly opened and read aloud for the construction project entitled.

PROJECT NAME: LA 44 at Parker Road / LA 933 Turn Lane
PROJECT NO.: ROAD240028; MA-22-05
STATEMENT OF WORK: Construction of a northbound left turn lane from LA 44 onto westbound Parker Road
DESCRIPTION: Move Ascension Program
ROUTE: LA 44
PARISH: Ascension Parish
LENGTH: 0.20 miles
LIMITS: The project begins approximately at Shadows of Ascension Boulevard and ends at the intersection of LA 44 at LA 933 / Parker Road.

PROJECT ENGINEER:	McKim & Creed Dustin Mayard, P.E. dmayard@mckimcreed.com
ASCENSION PARISH CHIEF TRANSPORTATION ENGINEER:	Daniel Helms, P.E., PTOE, RSP_{2I} 225-450-1320 daniel.helms@apgov.us
PROJECT MANAGER:	Treg Cunningham 225-450-1353 treg.cunningham@apgov.us

Bids should be submitted in a sealed envelope and must be to the attention of the Ascension Parish Purchasing Department and clearly labeled on the outside of the envelope as **Bid Submittal, with the project numbers ROAD240028; MA-22-05, the name LA 44 at Parker Road / LA 933 Turn Lane and Louisiana Contractor's License Number**, as well as all accompanying funds and documents, as follows:

Bid Submittal
Project No.: ROAD240028; MA-22-05
Project Name: LA 44 at Parker Road / LA 933 Turn Lane
LA License No.:

"Official" Bid Documents are available and Electronic bids are accepted at Central Bidding and may be obtained from www.centralauctionhouse.com or www.ascensionparish.net. For questions related to the electronic bidding process, please call Central Bidding at (225) 810-4814.

COPIES OF CONTRACT DOCUMENTS. Electronic copies of the drawings and specifications for use in preparing Bids may be obtained with contractor provided media. The Contractor to whom a contract is awarded will be furnished two (2) working copies of the specifications and the drawings, together with all Addenda thereto.

Bid packages may be submitted in different manners. Consult the bid documents for specific deadlines for desired submittal process before application. The following are acceptable methods:

Hand-delivered to:
615 E. Worthey Road, Gonzales, LA 70737
Uploaded to: www.centralauctionhouse.com

To address the above requirement for electronic bids, Ascension Parish Government will allow electronic bids submitted via the parish-approved online bid site to be submitted as follows (Refer to L.R.S. 38:2212):

A. A copy of the bid bond MUST be attached to the bid documents submitted electronically.
B. The original bid bond document must be received in our office no later than 48 hours after bid opening date and time.
C. The bid bond envelope must be clearly labeled as a Bid Bond with the project name, the vendor's name as it appears on the bid documents and the vendor's address.

All addenda, Amendments, Letters of Clarification, and Withdrawal Notices will be posted online at www.centralauctionhouse.com.

Construction proposal information may be accessed online at www.centralauctionhouse.com. Users shall select "Login" and, if necessary, submit and create a New User Registration to view and download drawings. Upon creating a user registration account, users must click "Ascension Parish Government" to view any current advertised listings. This listing is titled "LA 44 at Parker Road / LA 933 Turn Lane".

All registered users will have the ability to submit questions and view project information as well as view project drawings.

The Ascension Parish Government shall not be responsible if the bidder cannot complete and submit a bid due to failure or incomplete delivery of the files submitted electronically.

All questions regarding this project and the bid packages shall be submitted to the Purchasing Department via purchasing@apgov.us by 10:00 a.m. CDT on July 12, 2024. Responses will be coordinated with the Project Engineer and Posted on the www.centralauctionhouse.com website by 5:00 p.m. CDT on July 17, 2024.

PARISH OF ASCENSION
PURCHASING

615 E Worthey Rd.
Gonzales, LA. 70737
(225) 450-1200
www.ascensionparish.net

Clint Cointment
Parish President

A **MANDATORY Pre-Bid meeting** will be held at **10:00 am CDT** on **July 10, 2024,** at the Ascension Parish Department of Public Works Building, 42077 Churchpoint Road, Gonzales, LA 70737.

Bid security in the amount of five percent (5%) of the total bid must accompany each Bid and shall be made payable to Ascension Parish Government. See bid documents for specific criteria.

RS 38:2218. Evidence of good faith; countersigning:

A. The public entity advertising for bids for work shall require the bidders to attach a certified check, cashier's check, or bid bond for not more than five percent of the contract price of work to be done, as evidence of good faith of the bidder. The public entity advertising for bids for work may require the bidders to attach a certified check, cashier's check, or bid bond for not more than five percent of the estimated price of supplies or materials, as evidence of good faith of the bidder.

No bidder may withdraw his bid within forty-five (45) days after the actual date of opening thereof.

The Parish of Ascension reserves the right to disqualify any Bid, response to a Request for Qualifications, or Request for Proposals if it is determined that the submitting business entity is not in good standing with the Louisiana Secretary of State or is not authorized to do business in the State of Louisiana.

The United States Department of Transportation (DOT) operates a toll-free hotline Monday through Friday, 8:00
a.m. to 5:00 p.m., EDT. Anyone with knowledge of possible bid rigging, bidder collusion or other fraudulent activities should call this hotline at 1-(800)-424-9071. All information will be treated confidentially, and caller anonymity will be respected.

Ascension Parish Government reserves the right to reject any and all bid for just cause.

Ascension Parish Government
Clint Cointment, Parish President

CHIEF - Please publish 6/27/2024, 7/4/2024, 7/11/2024
WEEKLY- Please publish 6/27/2024, 7/4/2024, 7/11/2024

GENERAL CONDITIONS OF THE CONSTRUCTION CONTRACT

GENERAL CONDITIONS OF THE CONSTRUCTION CONTRACT

TABLE OF CONTENTS

PART 1 - BIDDING AND CONTRACT DOCUMENTS 3

PART 1 - ARTICLE 2: INSTRUCTIONS TO BIDDERS 3

PART 1 - ARTICLE 3: DRAFT CONTRACT 9

PART 2 - GENERAL CONDITIONS 25

PART 2 - ARTICLE 1: DEFINITIONS AND TERMINOLOGY 25

PART 2 - ARTICLE 2: PRELIMINARY MATTERS 31

PART2: ARTICLE 3: CONTRACT DOCUMENTS: INTENT, AMENDING, REUSE 33

PART 2 - ARTICLE 4: AVAILABILITY OF LANDS; SUBSURFACE AND PHYSICAL CONDITIONS; HAZARDOUS ENVIRONMENTAL CONDITIONS; REFERENCE POINTS 36

PART 2 - ARTICLE 5: BONDS AND INSURANCE 42

PART 2 - ARTICLE 6: CONTRACTOR'S RESPONSIBILITIES 50

PART 2 - ARTICLE 7: OTHER WORK AT THE SITE 65

PART 2 - ARTICLE 8: OWNER'S RESPONSIBILITIES 67

PART 2 - ARTICLE 9: ENGINEER'S STATUS DURING CONSTRUCTION 69

PART 2 - ARTICLE 10: CHANGES IN THE WORK; CLAIMS 76

PART 2 - ARTICLE 11: COST OF THE WORK; ALLOWANCES; UNIT PRICE WORK 79

PART 2 - ARTICLE 12: CHANGE OF CONTRACT PRICE; CHANGE OF CONTRACT TIMES 84

PART 2 - ARTICLE 13: TESTS AND INSPECTIONS; CORRECTION, REMOVAL OR ACCEPTANCE OF DEFECTIVE WORK 87

PART 2 - ARTICLE 14: PAYMENTS TO CONTRACTOR AND COMPLETION 92

PART 2 - ARTICLE 15: SUSPENSION OF WORK AND TERMINATION 99

PART 2 - ARTICLE 16: DISPUTE RESOLUTION 102

PART 2 - ARTICLE 17: MISCELLANEOUS 103

PART 3 - BID FORMS 104

PART 4 - CONTRACT FORMS 124

PART 1 - BIDDING AND CONTRACT DOCUMENTS

PART 1 - ARTICLE 2: INSTRUCTIONS TO BIDDERS

2.1 CROSS REFERENCE TO PRIMARY STATEMENTS. Definitions, requirements, and limitations affecting the bidding are contained in the various contract documents and are not necessarily repeated in these instructions.

2.2 QUALIFICATION OF BIDDERS. Bidders may be required to submit evidence that they have a practical knowledge of the particular task bid upon, and that they have the financial resources to complete the proposed scope in entirety.

In determining the Bidder's qualifications, the following factors will be considered: contracts previously completed by the Bidder and whether the Bidder (a) maintains a permanent place of business, (b) has adequate plant and equipment to do the task properly and expeditiously, (c) has the financial resources to meet all obligations incidental to the task, and (d) has appropriate technical experience.

Each Bidder may be required to show that he has completed similar work and that there are no just claims pending against such work. No Bid will be accepted from a Bidder who is engaged on any contract which would impair his ability to perform or finance his work.

2.3 LOUISIANA LICENSE REQUIREMENTS. Only Bids of Contractors licensed under LSA R.S. – 37:2150 et seq., will be considered. Contractors shall be licensed under Classification II – Highway, Street and Bridge Construction. Licensing is supervised by the Louisiana Licensing Board for Contractors, 7434 Perkins Road, Baton Rouge, Louisiana. Contractors desiring to bid shall submit with their Bids evidence that they hold a valid license in the proper classification.

2.4 FAMILIARIZATION WITH THE WORK. Before submitting their Bid, each prospective Bidder shall familiarize themselves with the scope of the task, the sites where the proposed improvements are to be performed, local labor conditions and all laws, regulations and other factors affecting performance of the work. The Bidder shall carefully correlate their observations with requirements of the Contract Documents and otherwise satisfy himself of the expense and difficulties attending performance of the Work. The submission of a Bid will constitute a representation of compliance by the Bidder. There will be no financial adjustment justification for lack of such familiarization. Additionally, evidence of having the lack of familiarization could result in contract termination or substantial financial impacts to the contractor due to liquidated damages or other variables.

2.4.1 SITE CONDITIONS. Each Bidder shall visit the sites of the Work and completely inform themselves relative to construction hazards and procedure, the availability of lands, the character and quantity of surface and subsurface materials, and utilities to be encountered, the arrangement and condition of existing structures and facilities, the procedure necessary for maintenance of uninterrupted operation of existing facilities, the character of construction equipment and facilities needed for performance of the Work,

and facilities for transportation, handling, and storage of materials and equipment. All such factors shall be properly investigated and considered in the preparation of the Bid.

24.2 ACCESS TO THE SITE(S). The project is to be constructed within the Parish of Ascension. Contractors and Suppliers wishing to inspect the various sites may do so at their convenience.

25 INTERPRETATIONS. The Drawings have been prepared by McKim & Creed, 1022 S. Purpera Ave., Gonzales, LA 70737, who is hereinafter called the ENGINEER and who is to act as the OWNER's representative, assumes all duties and responsibilities and have the rights and authority assigned to the ENGINEER in the Contract Documents in connection with completion of the Work in accordance with the Contract Documents. All questions about the meaning or intent of the Specifications and Contract Documents shall be submitted to the ENGINEER in writing. Replies will be issued by Addenda will be transmitted via facsimile, e-mail, or hand - delivered to all parties recorded by ENGINEER as having received the bidding documents and posted on the Central Auction House website. Addenda will be issued at least 72 hours, (3 working days, excluding weekends and holidays) prior to the time stated for opening bids. Questions received less than five (5) working days prior to the date for opening Bids will not be answered. Only answers furnished by formal written Addenda will be binding. Oral and other interpretations or clarifications will be without legal effect.

26 TAXES AND PERMITS. Attention is directed to the requirements of the General Conditions and Supplemental Conditions regarding payment of taxes and obtaining permits. All taxes that are lawfully assessed against Owner or Contractor in connection with the Work shall be paid by Contractor. The bid prices shall include all such taxes and the costs of all required permits.

27 BID SECURITY. The amount of bid security is stated in the Invitation. The required security must be in the form of a certified or bank cashier's check or a bid bond. The bid bond must be executed by a surety meeting the requirements set forth in the General Conditions and Supplemental Conditions. Bid bond must have attached appropriate and satisfactory Power of Attorney. The bond shall also be countersigned by a person who is under contract with the Surety Company or Bond Issuer as a Licensed Agent in this State and who is residing in the State. Refer to R.S. 38:2218

The bid security shall be made payable without condition to the Owner. The bid security may be retained by and shall be forfeited to the Owner as liquidated damages if the Bid is accepted and a contract based thereon is awarded and the Bidder should fail to enter into a contract in the form prescribed, with legally responsible sureties, within fifteen (15) days after such award is made by Owner.

28 RETURN OF BID SECURITY. The bid security of the successful Bidder will be retained until the bidder has executed the Agreement and furnished the required Contract Security, whereupon checks furnished as bid security will be returned; if the bidder fails to execute and deliver the Agreement and furnish the required Contract Security within fifteen (15) days of the Notice of Award, Owner may annul the Notice of Award and the bid security of that Bidder will be forfeited. The bid security of any Bidder whom Owner believes 'to have a reasonable chance of receiving the award' may be retained by Owner until the seventh day after the executed

Agreement is delivered by Owner to Contractor and the required Contract Security is furnished but not to exceed thirty (30) days after the Bid opening. Checks furnished as bid security by other Bidders will be returned within five (5) days of the Bid opening.

2.9 CONTRACT TIME. The Contract Time is an essential part of the contract and it may be necessary for each Bidder to satisfy Owner of his ability to complete the Work within the time set forth in the Bid Forms. Provisions for delays, liquidated damages, and extensions of time are set forth in the General and Supplemental Conditions.

The Contractor is responsible for equipment and material delivery. A time extension to the Contract duration will not be allowed for late material or equipment delivery.

2.10 SUBCONTRACTORS AND SUPPLIERS. Ten (10) days after Bids are opened, the successful Bidder, and any other Bidder so requested, shall submit a list of all Subcontractors and Suppliers he expects to use in the Work and to submit manufacturer's data on selected equipment, if requested by Owner.

2.10.1 SUBCONTRACTOR QUALIFICATION. Particular consideration will be given to the qualifications of each Subcontractor proposed. An experience statement with pertinent information as to similar projects and other evidence of qualification shall be furnished for each named Subcontractor, as requested by the Owner or Engineer. If Owner or Engineer, after due investigation has reasonable objection to any proposed Subcontractor, he may, before giving Notice of Award, request the successful Bidder to submit an acceptable substitute without an increase in his Bid. If the successful Bidder declines to make substitution he will not thereby sacrifice his bid security. Any Subcontractor so listed and to whom Owner or Engineer does not make written objection prior to the giving of the Notice of Award will be deemed acceptable to the Owner and Engineer.

Contractor shall not be required to employ any Subcontractor against whom he has reasonable objection.

The use of Subcontractors listed by the Bidder and accepted by Owner prior to Notice of Award will be required in the performance of the Work.

2.10.2 SUPPLIERS. The list of Subcontractors shall also include the suppliers of the principal items of materials and equipment the Bidder expects to use in the Work unless such suppliers or manufacturers are named in the Bid. All material manufacturer, producer, supplier, source, or plant shall meet all qualifications required by LADOTD.

2.10.3 MANUFACTURER'S DATA. The list of Subcontractors submitted as provided herein shall be accompanied by two prints or copies of data on equipment and materials to be furnished by each supplier or manufacturer. Data so submitted shall illustrate the physical characteristics of the equipment and materials to be furnished. Although the drawings and specifications submitted prior to the Notice of Award need not be complete, but must contain sufficient detail for Engineer to determine whether the materials and equipment will conform to the Contract Documents.

The Contract Documents will take precedence over any nonconforming data submitted.

Any Bid specifically conditioned upon furnishing equipment or materials which are not responsive to the Contract Documents will not be considered.

2.11 BIDS.

2.11.1 BID FORM. The Bid Form is bound within the Contract Documents. Bid forms must be completed in ink or typed.

Bids by corporations must be executed in the corporate name by a president or vice-president (or other corporate officer) accompanied by evidence of authority to sign. The state of incorporation shall be shown below the corporate name. Bids by partnerships must be executed in the partnership name and signed by a partner; title and the official address of the partnership must be shown below the signature. Bids by joint ventures shall be signed by each participant in the joint venture or by an authorized agent of each participant.

The names of all persons signing must also be legibly printed below the signature. A Bid by a person who affixes to his signature the word "president", "secretary", "agent", or other designation without disclosing his principal may be held to be liable for the Bid.

All blank spaces in the Bid Form shall be filled. Bids received without all such items completed will be considered as a nonresponsive Bid.

The Bid shall contain an acknowledgement of receipt of all Addenda, the numbers and dates of which shall be filled in on the Bid Form.

No alterations in the Bids, or in the printed forms therein, by erasures, interpolations, or otherwise will be acceptable unless each such alteration is signed or initialed by the Bidder. If initialed, Owner may require the Bidder to clarify any alteration so initialed.

All questions regarding this project and the bid package shall be submitted to the Purchasing Department via purchasing@apgov.us ***by 10:00 am CST on July 12, 2024. Responses will be coordinated with the Project Engineer and posted on the centralauctionhouse.com web site by 5:00 PM CST on July 17, 2024.***

In addition to paper bids, electronic bids and electronic bid bonds for the project will be downloaded by the Ascension Parish Purchasing Department. Electronic bids and electronic bid bonds must be submitted through www.centralauctionhouse.com prior to the electronic bidding deadline. Beginning at ***10:00 AM CST* on July 23, 2024 all bids will be downloaded. No bids are accepted after *10:00 AM*. (CST) of July 23, 2024.**

2.11.2 AFFIDAVIT. Bidders shall include with their Bid the attached Non-Collusion Affidavit.

2.11.3 SUBMISSION OF BIDS. The bid shall consist of the Bid Form and the other documents that are required to be submitted along with the Bid Form.

Each Bid and accompanying data shall be enclosed in a sealed envelope or wrapping, addressed to:

Ascension Parish Government Purchasing Office
615 E. Worthey Street, Gonzales, Louisiana 70787
(P.O. Box 2392, Gonzales, Louisiana 70707)

and identified on the outside with the Bidder's name, Louisiana Contractor License Number and the words "***LA 44 at Parker Road / LA 933 Turn Lane***, ***MA-22-05***."

If the Bid is sent by mail, the sealed envelope shall be enclosed in a separate mailing envelope with the notation "**BID ENCLOSED**" on the face thereof.

Bids shall be deposited at the designated location prior to the time and date for receipt of Bids indicated in the Invitation for Bids, or the modified time and date indicated by Addendum. Bids received after the time and date for receipt of Bids will be returned unopened.

Bidder shall assume full responsibility for timely delivery at the location designated for receipt of Bids.

Oral, telephone, or telegraph Bids are invalid and will not receive consideration.

No Bidder may submit more than one Bid. Multiple Bids under different names will not be accepted from one firm or association.

2.11.4 MODIFICATION AND WITHDRAWAL OF BIDS. Bids may be modified or withdrawn by an appropriate document duly executed (in the manner that a Bid must be executed) and delivered to the place where Bids are to be submitted at any time prior to the opening of Bids.

2.11.5 BIDS TO REMAIN OPEN. All Bids shall remain open for up to 45 days after the day of the Bid opening. Owner shall release Bids and return bid securities as specified in Section 2.8 under "Return of Bid Security".

2.12 AWARD OF CONTRACT.

2.12.1 To the extent permitted by the applicable local, state and federal laws and regulations, Owner reserves the right to reject any and all Bids for just cause. Ascension Parish Government reserves the right to reject any and all bids in accordance with Louisiana State Bid Law.

2.12.2 In order to be responsive, the apparent low bidder must submit the additional information and documentation required by the Owner and Engineer with the time delays established by law.

2.12.3 The apparent low Bidder must establish complete satisfaction of the Owner, a minimum, that he has: (a) adequate financial resources to meet bid Contractual obligations and will maintain same for the Contract Time; (b) adequate equipment to perform the Work properly and within the Contract Time; (c) the necessary experience and technical qualifications in the type of Work provided for in the Contract; (d) conformed to the Qualification Submittals as requested.

2.12.4 Owner may conduct such investigations as it deems necessary to assist in the evaluation of any Bid and to establish the responsibility, qualifications and financial ability of the Bidders, proposed Subcontractors, and other persons and organizations to do the Work in accordance with the Contract Documents to the Owner's satisfaction within the prescribed time. Owner reserves the right to reject the Bid of any Bidder who does not pass any such evaluation to Owner's satisfaction.

2.12.5 If the Contract is to be awarded for the Work, it will be awarded to the lowest responsive and responsible Bidder as determined by the evaluation of the corresponding Bid.

2.13 EXECUTION OF THE AGREEMENT. The Contractor shall be furnished four (4) copies of the Agreement, including insurance certificates, and other Contract Documents bound therewith. Within fifteen (15) days of Notice of Award, Contractor shall execute the Agreement, insert executed copies of the required bonds and power of attorney and submit all copies to Owner. The date of contract on the Agreement and Bond forms shall be left blank for filling in by Owner. The certification date on the power of attorney also shall be left blank for filling in by Owner.

Owner shall execute all copies, insert the date of contract on the Agreement, Bonds, and power of attorney, and return all copies to Engineer for review and distribution.

Once all contract documents have been executed, the Contractor shall be furnished one (1) set of original documents. The Owner shall have one (1) set of these documents recorded in the office of the Recorder of Mortgages in the jurisdiction where the work is to be performed.

2.14 COPIES OF CONTRACT DOCUMENTS. -- See Invitation to Bidders

2.15 LOCAL MATERIAL AND FIRMS. By statutory authority, preference is hereby given to materials, supplies, and provisions produced, manufactured, or grown in Louisiana, quality being equal to articles offered by competitors outside of the State (LSA R.S. – 38:2252), and preference is hereby given to firms doing business in the State of Louisiana (LSA R.S.– 38:2253).

PART 1 - ARTICLE 3: DRAFT CONTRACT

NOTICE
This is a DRAFT CONTRACT. The FINAL CONTRACT is subject to final negotiations and special conditions pending agreement approved by Ascension Parish Government Legal entities.

MASTER CONTRACT
For
PUBLIC WORKS/CONSTRUCTION

BE IT KNOWN that on this _____ day of _____, 20_____

Ascension Parish Government (hereinafter called OWNER), by and through the Office of the Parish President (hereinafter sometimes referred to as the PARISH), as approved by Resolution adopted by the Parish Council of Ascension on the ____ day of _____, 20_____.

AND

_____, (hereinafter called CONTRACTOR) qualified to do and doing business in this State and Parish (hereinafter referred to as "CONTRACTOR") and authorized to enter into this contract;

do hereby enter into contract under the following terms and conditions:

NOTE: This Contract or Agreement governs the relationship and rights between the Parties. While there may be other Documents (for example, General Conditions) which might exist between the Parties, those documents **do not** control in the event or to the extent that there is any conflict or contradiction with the terms of this Agreement or Contract. In the event that there is any conflict between the terms of this Agreement/Contract and any other document between the parties, THE PARTIES AGREE THAT THIS AGREEMENT/CONTRACT SHALL CONTROL AND GOVERN.

1. SCOPE OF WORK

A. CONTRACTOR shall complete all Work as specified or indicated in the Contract Documents in conjunction with:

LA 44 at Parker Road / LA 933 Turn Lane
MA-22-05

2. ENGINEER

A. The Drawings have been prepared by ***McKim & Creed, 1022 S. Purpera Ave, Gonzales, LA 70737*** and prepared for Ascension Parish Government, who is hereinafter called ENGINEER and who is to act as OWNER's representative, assume all duties and responsibilities and have

the rights and authority assigned to ENGINEER in the Contract Documents in connection with completion of the Work in accordance with the Contract Documents.

3. TERM OF CONTRACT

A. The Work will be substantially completed (See item #44 on page D28) within ***90 Calendar Days*** from the date identified on the Notice to Proceed from the Engineer.

B. The Notice to Proceed shall be issued within thirty (30) days from the execution of this contract unless the Owner or Owner's representative and the Contractor agree in writing to another specified date.

C. This Construction Contract shall terminate upon final acceptance by the Engineer and all justified payments are made to contractor.

4. PROJECT SCHEDULE

A. CONTRACTOR shall submit and strictly adhere to a project construction schedule throughout the allocated contract and associated time frame. CONTRACTOR is aware that OWNER may have a representative at each site where Work is being performed and that CONTRACTOR needs to coordinate with the OWNER'S REPRESENTATIVE or PROJECT MANAGER where Work on the CONTRACT will be performed. CONTRACTOR will coordinate with the OWNER'S REPRESENTATIVE by strictly following the project construction schedule or Progress Schedule. OWNER recognizes and understands that changes in project construction schedule or Progress Schedule may become necessary during the course of the project. However, in the event of any such change, the CONTRACTOR shall notify the OWNER'S REPRESENTATIVE **in writing** of a proposed change. Said written notice shall be provided at least 12 hours prior to the revised construction activity. Said notice shall be provided by emailing notice of change to menlow@apgov.us or trabalais@apgov.us and other contacts including testing company that is a team for member for the project.

B. Should the CONTRACTOR fail to timely notify the OWNER'S REPRESENTATIVE of such change, the OWNER'S REPRESENTATIVE will document the CONTRACTOR'S failure to notify of the change in work and SHALL assess stipulated damages as follows. For EACH failure to notify the OWNER'S REPRESENTATIVE of any change in the project construction schedule or Progress Schedule, the CONTRACTOR AGREES TO PAY **$150.00 per failure to notify the OWNER'S REPRESENTATIVE.** CONTRACTOR agrees that these stipulated damages reflect the lost time, manpower, and mileage incurred by OWNER attempting to locate the CONTRACTOR where a change in schedule occurs and the required notice was not provided. CONTRACTOR further agrees that **said amount shall be paid** by directly reducing the amount of monthly invoices/pay applications by the amount of penalties issued. The Penalty fees shall be itemized on monthly invoices.

5. LIQUIDATED DAMAGES

A. OWNER and CONTRACTOR recognize that time is of the essence of this Agreement and the OWNER will suffer financial loss if the Work is not completed within the times specified in

Section 3A above, plus any extensions thereof allowed in accordance with the contract conditions and approved time changes thereto. There are delays, expenses and difficulties involved in proving in a legal arbitration proceeding the actual loss suffered by OWNER if the Work is not completed on time. Accordingly, instead of requiring proof, OWNER and CONTRACTOR agree that as liquidated damages for delay (but not as a penalty) CONTRACTOR shall pay OWNER the amount of $500 for each and every day that expires after the time specified in Section 3A for Substantial Completion until the Work is substantially complete.

6. CONTRACT PRICE

A. OWNER shall pay CONTRACTOR for completion of the Work completed in accordance with the Contract Documents in the amount specified therein, subject to adjustment as provided in the Contract Documents or amendments thereto. The estimated total of this contract is **$_____.**

7. PAYMENT PROCEDURES

A. CONTRACTOR shall submit Applications for Payment in accordance with Article 14.02 of the General Conditions. Applications for Payment will be processed by ENGINEER as provided in the General Conditions.

B. **Progress Payments**. OWNER shall make progress payments on account of the Contract Price on the basis of CONTRACTOR'S Applications for Payment as recommended by ENGINEER, once each month during construction. All progress payments will be on the basis of progress of the Work measured by the schedule of values established in Part 2 Article 14.2 of the General Conditions (and in each case of Unit Price Work based on the number of units completed) or, in the event there is no schedule of values, as provided in the General Conditions. Payment will be made on work that has been installed, inspected, tested, verified, and done so to the satisfaction of the engineer.

C. Pursuant to LA R.S. – 38.2248 (Public Contract Law), Owner shall withhold retainage from each progress payment until payment is due under terms and conditions governing substantial completion or final payment. Retainage shall be ten percent (10%) of the amount of work completed to date.

D. **Fuel or Asphalt/Concrete Adjustments.** There shall be **NO** adjustments for prices or costs of any fuel or asphalt/concrete on this project, arising out of the work on this project/contract, or arising out of this contract. Further, the CONTRACTOR hereby waives any price adjustment for fuel or asphalt/concrete or the ability or right to request any price adjustment for fuel or asphalt/concrete. Particularly, the Louisiana DOTD provisions (or any such or similar provisions by any other third party) pertaining to or related to fuel or asphalt/concrete adjustments are not part of this contract, are not incorporated by reference or otherwise in this Contract, and shall not apply in any form or fashion to the contract. Any language in this Contract which implies that the CONTRACTOR may obtain an adjustment in price for fuel or asphalt/concrete is hereby to be interpreted that CONTRACTOR shall **not** receive any such adjustment. CONTRACTOR shall not assert that any language in the CONTRACT creates any vagueness or ambiguity in the

CONTRACT entitling CONTRACTOR to price adjustments for fuel or asphalt/concrete. CONTRACTOR hereby waives any right or ability to request any price adjustment for fuel or asphalt/concrete and CONTRACTOR shall **not** submit any request for any change in price for fuel or asphalt/concrete adjustments to the OWNER in any form.

E. **Final Payment**. Upon final completion and acceptance of the Work in accordance with paragraph 14.7 of the General Conditions. OWNER shall pay the remainder of the Contract Price as recommended by ENGINEER.

F. There shall be no fees charged by, nor paid to, CONTRACTOR for consultation with the Parish.

G. CONTRACTOR hereby agrees that the responsibility for payment of taxes from the funds thus received under this agreement shall be said CONTRACTOR's obligation and identified under Federal Tax Identification Number as listed in the Scope.

H. The Parish agrees to make payment to CONTRACTOR for services upon receipt and approval of each invoice. The Parish will pay CONTRACTOR the amount due and payable within thirty (30) days or unless a conflict results in a delay of payment. Upon receipt of each invoice, the Parish shall have the right and opportunity to review, confirm or otherwise determine the accuracy of each invoice and performance of service. In the event that the Parish disputes or otherwise may question the accuracy of each invoice or quality of all work performed, the Parish may withhold payment of any invoice until a successful and satisfactory resolution can be had between the parties. Parish agrees to not unreasonably withhold payments of any invoice.

I. Other than the fee schedule herein, there will be absolutely no additional fees due CONTRACTOR to cover its overhead costs, general expenses, capital expenses, expenses for principal/branch/ field offices, employees' salaries, direct and indirect costs, additional costs or profit of any nature whatsoever in excess of the previously agreed hourly rate.

8. CONTRACTOR'S REPRESENTATIONS

In order to induce OWNER to enter into this Agreement, CONTRACTOR makes the following representations:

A. CONTRACTOR is familiar with the nature and extent of the Contract Documents, Work site, locality and all local conditions and Laws and Regulations that in any manner may affect cost, progress, performance or furnishing of the Work.

B. CONTRACTOR has reviewed and checked all information and data shown or indicated on the Contract Documents with respect to existing Underground Facilities. No additional examinations, investigations, explorations, tests, reports, studies, or similar information or data in respect of said Underground Facilities are or will be required by CONTRACTOR in order to perform and furnish the Work at the Contract Price, within the Contract Time and in accordance with the other terms and conditions of the Contract Documents, including specifically the provisions of Paragraph 4.3 of the General Conditions.

C. CONTRACTOR has correlated the results of all such observations, examinations, investigations, explorations, tests, reports, and studies with the terms and conditions. Of the Contract Documents.

D. CONTRACTOR has given ENGINEER written notice of all conflicts, errors or discrepancies that he has discovered in the Contract Documents and the written resolution thereof by ENGINEER is acceptable to CONTRACTOR.

9. CONTRACT DOCUMENTS

The Contract Documents which comprise of the contract between OWNER and CONTRACTOR, attached hereto and made a part hereof, consist of the documents listed in Table of Contents, and the documents identified below.

A. CONTRACTOR Bid Documents
B. Bid Bonds
C. Agreement
D. Payment Bond
E. Performance Bond
F. Notice of Award
G. Notice to Proceed
H. Technical Specifications and Special Provisions prepared by ENGINEER
I. Standard General Conditions
J. Drawings prepared by ENGINEER

10. CONTRACTOR DOCUMENTS

A. The CONTRACTOR shall also furnish sufficient as-built sets of plans, specifications and contract documents.

B. All data collected by the CONTRACTOR and all documents, notes, drawings, tracings and files shall remain the property of the OWNER except as otherwise provided herein. The CONTRACTOR shall furnish to the PROJECT MANAGER originals of any project documents used in completion of the project or in any way related to this project to the PROJECT MANAGER.

C. The Owner shall furnish without charge all standard plans and specifications and any other information which the Owner now has in its files which may be of use to the CONTRACTOR. CONTRACTOR has the duty to and must confirm and verify all information contained therein.

D. **Construction Documents.** The CONTRACTOR shall use the most current version of the standard forms of documents adopted and specified by the OWNER in the performance of the Contract, all as of the date of the signing of this contract. Notwithstanding anything to the contrary in any other provision of this contract, none of the contract documents provided by the OWNER are or will become the property of the CONTRACTOR but shall remain the property of the OWNER to the extent the OWNER has a property interest therein.

E. Notwithstanding any Section hereinafter, there will be retention of all related records:

i. All records, reports, documents and other material delivered or transmitted to CONTRACTOR by Parish shall remain the property of Parish, and shall be returned by CONTRACTOR to Parish, at CONTRACTOR's expense, at termination or expiration of this contract. All records, reports, documents, exhibits or other material related to this contract and/or obtained or prepared by CONTRACTOR in connection with the performance of the services contracted for herein shall become the property of Parish, and shall be returned by CONTRACTOR to Parish, at CONTRACTOR's expense, at termination or expiration of this contract.

ii. The Parish and CONTRACTOR acknowledge and agree that the Parish has the right to review retain all records, reports, worksheets or any other material of either party related to this contract. CONTRACTOR further agrees that CONTRACTOR will furnish to the Parish copies of any and all records, reports, worksheets, bills, statements or any other material of CONTRACTOR or Parish related to this contract.

iii. CONTRACTOR shall maintain all books, documents, papers, accounting records and other evidence pertaining to costs incurred and shall make such materials available at its offices at any reasonable time for inspection and copying by the Parish.

iv. CONTRACTOR shall retain all of its records and supporting documentation applicable to this contract with the Parish for a period of three (3) years after termination of the contract in accordance with state law, except as follows:

1. Records that are subject to Federal Funds and/or audit findings shall be retained for five (5) years after such findings have been resolved close out has been issued.

2. All such records and supporting documentation shall be made readily available for inspection, copying or audit by representatives of the Parish. In the event the CONTRACTOR goes out of existence, it shall turn over to the Parish all of its records relating to this contract to be retained by the Parish for the required period of time.

F. In the event there is re-use of any documents created by CONTRACTOR, CONTRACTOR invokes the privileges afforded it as per La. Revised Statute R.S. 38:2317.

G. The Parish agrees not to use CONTRACTOR's work product on any other project without the express written notice to the CONTRACTOR.

H. All of CONTRACTOR's pre-existing or proprietary computer programs, software, information, standard details or material developed by CONTRACTOR outside of this agreement shall remain the exclusive property of the CONTRACTOR.

11. NON-ASSIGNABILITY

A. CONTRACTOR shall not assign nor transfer any interest in this contract (whether by assignment or novation) without prior written consent of the Parish, provided however, that claims for money due or to become due to the CONTRACTOR from the Parish under this

contract may be assigned to a bank, trust company, or other financial institution without such prior written consent. Notice of any such assignment or transfer shall be furnished promptly to the Parish.

B. No assignment by a party hereto of any rights under or interests in the Contract Documents will be binding on another party hereto without the written consent of the party sought to be bound; and specifically but without limitation moneys that may become due and moneys that are due may not be assigned without such consent (except to the extent that the effect of this restriction may be limited by law), and unless specifically stated to the contrary in any written consent to an assignment no assignment will release or discharge the assignor from any duty or responsibility under the Contract Documents.

C. OWNER and CONTRACTOR each binds itself, its partners, successors, assigns and legal representative to the other party hereto, its partners, successors, assigns, and legal representatives in respect to all covenants, agreements and obligations contained in the Contract Documents.

12. BUDGET LIMITATION

A. It is the responsibility of the CONTRACTOR to advise the Parish in advance if contract funds or contract terms may be insufficient to complete contract objectives. CONTRACTOR understands and specifically warrants that it assumes the sole responsibility to advise the Parish in advance if contract funds or contract terms may be insufficient to complete contract objectives. In providing opinions of probable construction cost, the Parish understands that the CONTRACTOR has no control over costs and price of labor, equipment or materials or over the general CONTRACTOR's method of pricing, and that the opinion of probable costs provided herein are made on the basis of the CONTRACTOR's qualifications and experience.

B. The continuation of this contract is contingent upon the appropriation of funds by the Parish to fulfill the requirements of the contract. If the Parish fails to appropriate sufficient monies to provide for the continuation of this or any other related contract, or if such appropriation is reduced by the veto of Parish President by any means provided in the appropriations Ordinance to prevent the total appropriation for the year from exceeding revenues for that year, or for any other lawful purpose, and the effect of such reduction is to provide insufficient monies for the continuation of the contract, the contract shall terminate on the date of the beginning of the first fiscal year for which funds are not appropriated

13. INSURANCE

A. The CONTRACTOR shall secure and maintain at its expense such insurance that will protect it and the Parish from claims under the Workmen's Compensation Acts and from claims for bodily injury, death or property damage which may arise from the performance of services under this agreement. All certificates of insurance shall be furnished to the Parish and shall provide that insurance shall not be canceled without thirty (30) days prior notice of cancellation given to the Parish of Ascension, in writing, on all of the required coverage provided to Ascension Parish. Where possible, all policies and notices should name the CONTRACTOR and Parish. The Parish may examine the policies at any time.

B. All policies and certificates of insurance shall contain the following clauses:

i. The CONTRACTOR's insurers will have no right of recovery or subrogation against the Parish of Ascension, it being the intention of the parties that the insurance policy so affected shall protect both parties and be the primary coverage for any and all losses covered by the below described insurance.

ii. The Parish of Ascension shall be named as additional named insured with respect to automobile and general liability.

iii. The insurance companies issuing the policy or policies shall have no recourse against the Parish of Ascension for payment of any premiums or for assessments under any form of policy.

iv. Any and all deductible in the described insurance policies shall be assumed by and be at the sole risk of the CONTRACTOR.

C. Prior to the execution of this agreement, the CONTRACTOR shall provide at its own expense, proof of the following insurance coverage required by the contract to the Parish of Ascension by insurance companies authorized to do business in the State of Louisiana. Insurance is to be placed with insurers with an A.M. Best rating of no less than B+.

i. Worker's compensation Insurance: As required by Louisiana State Statute exception; employer's liability shall be at least $1,000,000 per occurrence when work is to be over water and involves maritime exposures, otherwise this limit shall be no less than $500,000 per occurrence.

ii. Commercial General Liability Insurance with a Combined Single Limit of at least $500,000.00 per Occurrence for bodily injury and property damage. This insurance shall include coverage for bodily injury and property damage, and indicate on the certificate of insurance the following:

1. Premises Operations;
2. Broad form contractual liability;
3. Products and completed operations;
4. Personal injury;
5. Broad form property damage;
6. Explosion, collapse and underground coverage (not needed for design).

iii. Business Automobile Liability Insurance with a Combined Single Limit of $500,000.00 per Occurrence for bodily injury and property damage, unless otherwise indicated. This insurance shall include for bodily injury and property damage the following coverage:

1. Any automobiles;
2. Owned automobiles;
3. Hired automobiles;

4. Non-owned automobiles;
5. Uninsured motorist.

iv. An umbrella policy or excess policy may be used to meet minimum requirements.

v. The CONTRACTOR shall also secure and maintain at its expense professional liability insurance in the sum of at least One Million Dollars ($1,000,000.00) per claim.

vi. All policies of insurance shall meet the requirements of the Parish of Ascension prior to the commencing of any work. The Parish of Ascension has the right, but not the duty, to approve all insurance policies prior to commencing of any work. If at any time, it becomes known that any of the said policies shall be or becomes unsatisfactory to the Parish of Ascension as to form or substance; or if a company issuing any such policy shall be or become unsatisfactory to the Parish of Ascension, the CONTRACTOR shall promptly obtain a new policy, timely submit same to the Parish of Ascension for approval and submit a certificate thereof as provided above. The Parish agrees to not unreasonably withhold approval of any insurance carrier selected by CONTRACTOR. In the event that Parish cannot agree or otherwise authorize said carrier, CONTRACTOR shall have the option of selecting and submitting new insurance carrier within 30 days of said notice by the Parish. In the event that the second submission is insufficient or is not approved, then the Parish shall have the unilateral opportunity to thereafter select a responsive and responsible insurance carrier all at the cost of CONTRACTOR and thereafter deduct from CONTRACTOR's fee the cost of such insurance.

vii. Upon failure of CONTRACTOR to furnish, deliver and/or maintain such insurance as above provided, this contract, at the election of the Parish of Ascension, may be forthwith declared suspended, discontinued or terminated. Failure of the CONTRACTOR to maintain insurance shall not relieve the CONTRACTOR from any liability under the contract, nor shall the insurance requirements be construed to conflict with the obligation of the CONTRACTOR concerning indemnification.

viii. WAIVER: Except as otherwise provided by law, the coverage requirements of this section may be waived in whole or in part on agreements under $50,000.00, and the Parish is authorized to use its discretion in regard to insurance requirements for such contracts. Except as otherwise provided by law, the Parish President or the Parish Chief Administrative Officer is authorized to omit in whole or in part the insurance requirements of this section in connection with such contracts.

D. CONTRACTOR shall maintain a current copy of all annual insurance policies and provide same to the Parish of Ascension on an annual basis or as may be reasonably requested.

14. OTHER ITEMS AND CONDITIONS

A. **Licenses and Commissions.** The CONTRACTOR shall, at all times during the term of this contract, maintain valid Louisiana licenses and commissions as are customarily required of such a CONTRACTOR, including but not limited to those that may be required by this State and/or Parish. The CONTRACTOR agrees to renew and or keep current all licenses and commissions

herein. The CONTRACTOR agrees to maintain a copy of all such licenses or commissions on file at all time and make same available for review as may be reasonably requested by the Parish of Ascension.

B. The professional and technical adequacy and accuracy of designs, drawings, specifications, documents, and other work products furnished under this agreement will be conducted in a manner consistent with that level of care and skill ordinarily exercised by members of the profession in the Baton Rouge Metropolitan area including the parishes surrounding Ascension Parish. In the event the Parish must have work done by change order or addition resulting from an error or omission by the CONTRACTOR, CONTRACTOR shall provide, at no cost to Parish, all professional services attributable to the change order. This is in addition to Parish's right to recover from CONTRACTOR any damages for its errors and omissions.

C. The CONTRACTOR shall defend, indemnify, and hold the Parish harmless from against any and all actions, claims, demands, complaints, or lawsuits of any kind (whether in tort or in contract) for any sums of money, costs, liabilities, judgments, fines, or penalties asserted or alleged by any person, party, entity, firm or generation for any damage, injury, claim, or cause of action (of any kind) including, but not limited to, pecuniary and non-pecuniary damages/losses to person or property which are alleged to have been caused by or which were caused by or (wholly or partially), which grow out of, which arise from, or which result from any acts, errors, or omissions by CONTRACTOR, its agents, servants, or employees while engaged in connection with services required to be performed by the CONTRACTOR under this agreement. This paragraph is to be broadly interpreted to include any and all causes of action which result wholly or partially from the conduct or the CONTRACTOR.

D. This agreement shall be binding upon the successors and assigns for the parties hereto.

E. This agreement represents the entire Agreement between Parish and CONTRACTOR.

F. If there is any dispute concerning this agreement, the laws of Louisiana shall apply. The exclusive venue and jurisdiction for all lawsuits, claims, disputes, and other matters in questions between the parties to this agreement or any breach thereof shall be in the 23rd Judicial District Court for the Parish of Ascension, State of Louisiana. It is also understood and agreed that the laws and ordinances of Ascension shall apply.

G. In the event that the CONTRACTOR modifies the Parish's contract documents without the expressed prior written consent of the Parish, the CONTRACTOR shall indemnify and hold harmless the Parish from any claims, lawsuits, or damages that arise out of or are attributable to the modification. This indemnification and hold harmless obligation shall include not only the damages suffered by the Parish but also all reasonable expenses including, but not limited to, any and all litigation or other dispute resolution costs and any and all professional fees incurred by the Parish as a result of the CONTRACTOR's deviation from the Parish's contract documents.

H. CONTRACTOR agrees to a covenant against contingent fees. CONTRACTOR warrants that it has not employed or retained any company or person, other than a bona fide employee working solely for the CONTRACTOR, to solicit or secure this Contract, and that it has not paid or

agreed to pay any company or person, other than a bona fide employee working solely for the CONTRACTOR, any fee, commission, percentage, brokerage fee, gifts, or any other consideration, contingent upon or resulting from the award or making of this Contract. For breach or violation of this warranty, the Parish shall have the right to annul this contract without liability.

I. This contract may be amended only by mutual written consent of the respective parties.

J. **Third Party Beneficiary**. It is specifically agreed by and between the parties to this contract that no person or party is intended, deemed, considered, or construed to be a third party beneficiary of this contract.

K. Neither party will be liable for failure to fulfill its obligations when due to causes beyond its reasonable control.

L. Any failure or delay by either party in exercising any right or remedy will not constitute a waiver.

M. Severability: if any provision or item in this contract is held invalid or unenforceable for any reason, then such invalidity or unenforceability shall not affect other provisions or items of this contract. In such event, the remaining portions shall be given full force and effect without the invalid provision or item, and to this end the provisions or items of this contract are hereby declared severable.

N. It is specifically understood that the terms "agreement" and "contract" may be used interchangeably. It is specifically understood that the terms “OWNER”, “PROJECT MANAGER” and "Parish" and "the Parish of Ascension" may be used interchangeably.

O. **Conflict of Interest.** It is understood and agreed between the parties hereto that CONTRACTOR is not retained exclusively by the Parish but that the Parish may retain other CONTRACTORs during the term of this Contract. In the event of reasonably known conflicts of interest or potential conflicts of interest between the Parish and other parties who have engaged CONTRACTOR, the CONTRACTOR agrees to make full disclosure of the same, and that they will take no action on behalf of any other client directly adverse to the Parish, nor will CONTRACTOR take any action on behalf of the Parish directly adverse to any other client.

P. CONTRACTOR warrants that CONTRACTOR is qualified to perform the intended purposes of this agreement. In the event that CONTRACTOR becomes not fit nor qualified for any reason whatsoever, then CONTRACTOR agrees to withdraw from work herein at no cost to the Parish. In the event that the Parish determines that CONTRACTOR is not suited for Parish purposes or otherwise fails to represent Parish policies to the satisfaction of the Parish, then CONTRACTOR agrees to withdraw from this agreement.

Q. CONTRACTOR specifically agrees and understands that CONTRACTOR shall not maintain or otherwise claim that it possesses any security interest in any aspect of the work that forms the basis of this agreement.

R. CONTRACTOR agrees to ensure that its personnel are, at all times, educated and trained, and further, that CONTRACTOR and its personnel will perform all work and services in a workmanlike and professional manner.

S. CONTRACTOR recognizes and understands that time is of the essence. CONTRACTOR agrees to perform and provide services in accordance with this agreement and all incorporated attachments.

T. CONTRACTOR shall be responsible for any and all losses and damages suffered or incurred by the Parish, including but not limited to all costs, attorney's fees, out of pocket expenses, any & all Parish employee time, and any other expenditure by the Parish to defend, remedy, repair, replace, correct, or cure any condition or liability created or arising out of the actions or omissions to act of the CONTRACTOR, it's agents, officer, servants, or employees. This includes the payment of any cost or fees of any type or kind incurred by the Parish in defending any lawsuit, complaint, claim, claim filed or arising out of the action or omission to act of the CONTRACTOR.

U. CONTRACTOR agrees that it will be responsible for all of its own actual and reasonably related expenses for its on and off-site office work. CONTRACTOR further agrees that Parish will not be responsible for or in any way liable for CONTRACTOR's payroll costs, indirect or direct expenses, overhead, or any other amounts associated with CONTRACTOR's business other than the specific fees & costs generated under the terms of this agreement.

15. TERMINATION AND SUSPENSION

A. **Termination for Cause.** The Parish may terminate this Contract for cause based upon the failure of the CONTRACTOR to comply with the terms and/or conditions of the Contract, provided that the Parish shall give the CONTRACTOR written notice specifying the failure. If within thirty (30) days after receipt of such notice, the CONTRACTOR shall not have corrected such failure and thereafter proceeded diligently to complete such correction, then the Parish may, at its sole and exclusive option, place the CONTRACTOR in default and this contract shall terminate on the date specified in such notice. Work to be performed during this 30-day period shall not proceed without the actual knowledge of the Parish and specifically supervised by the Parish. Any work performed by CONTRACTOR during this period without the actual knowledge of the Parish and not under the supervision of the Parish shall not be compensated nor honored; CONTRACTOR specifically waives and forfeits any and all claims to payment, compensation, quantum merit, and/or reimbursement from the Parish of any work performed during this period in violation of this paragraph. CONTRACTOR agrees and understands specifically that satisfactory performance shall be unilaterally and exclusively determined by the Parish.

B. **Termination for Convenience.** Notwithstanding any other section herein, the Parish may terminate this contract at any time for any reason whatsoever by giving thirty (30) days written notice to the CONTRACTOR. The CONTRACTOR shall be entitled to payment for deliverables in progress; to the extent work has been actually and satisfactorily performed.

C. **Right to Cancel.**

i. The continuation of this contract is contingent upon the appropriation of funds to fulfill the requirements of the contract by the Parish. If the Parish fails to appropriate sufficient monies to provide for the continuation of this or any other contract, or if such appropriation is reduced by the veto of Parish President by any means provided in the appropriations Ordinance to prevent the total appropriation for the year from exceeding revenues for that year, or for any other lawful purpose, and the effect of such reduction is to provide insufficient monies for the continuation of the contract, the contract shall terminate on the date of the beginning of the first fiscal year for which funds are not appropriated. It is understood and agreed that the paragraph below may preempt this paragraph, all at the exclusive and unilateral option of the Parish.

ii. Either party shall have the right to cancel this contract, with or without cause, by giving the other party (30) days written notice.

D. Additional Causes for Termination or suspension:

i. The Parish has the right to cancel this contract upon less than thirty (30) days due to budgetary reductions and changes in funding priorities by the Parish.

ii. By mutual agreement and consent of the parties hereto.

iii. By the Parish as a consequence of the CONTRACTOR's failure to comply with the terms, progress or quality of work in a satisfactory manner, proper allowances being made for circumstances beyond the control of the CONTRACTOR.

iv. By either party upon failure to fulfill its obligations as set forth in this contract.

v. In the event of the abandonment of the project by the Parish.

vi. A Stop Work Order can be immediately issued by the Parish if they deem it necessary to protect the health, safety, and welfare of the community.

E. Upon termination, the CONTRACTOR shall be paid for actual work performed prior to the notice of termination on a pro-rata share of the basic fee based on the phase or percentage of work actually completed.

F. Upon termination, the CONTRACTOR shall deliver to the Parish all original documents, notes, drawings, tracings, computer files, and files except the CONTRACTOR's personal and administrative files.

G. Should the Parish desire to suspend the work, but not definitely terminate the contract, this may be done by thirty (30) days' notice given by the Parish to that effect, and the work may be reinstated and resumed in full force & effect upon receipt from the Parish of thirty (30) days' notice in writing to that effect. CONTRACTOR shall receive no additional compensation during

the suspension period. The parties agree to revisit the terms of this contract during the suspension period which shall not exceed six (6) months, unless mutually agreed upon.

H. There is a right to cancel by the Parish by giving thirty (30) days' notice to CONTRACTOR and paying undisputed fees due for services on that portion of the work that has been satisfactorily, timely and/or professionally completed, all in the exclusive discretion of the Parish at any time herein.

I. In the event of a default and/or breach of this agreement and this matter is forwarded to legal counsel, then the prevailing party may be entitled to collect a reasonable attorney fees and all costs associated therewith whether or not litigation is initiated. Attorney fees shall be based upon the current, reasonable prevailing rate for counsel as provided on the fee schedule of the Louisiana Attorney General or in the private sector, whichever is greater. The parties agree to be responsible for such attorney fees, together for all with legal interest from date of agreement breach, plus all costs of collection.

J. Termination or cancellation of this agreement will not affect any rights or duties arising under any term or condition herein.

K. As to the filing of bankruptcy, voluntarily or involuntarily, by CONTRACTOR, CONTRACTOR agrees that if any execution or legal process is levied upon its interest in this contract, or if any liens or privileges are filed against its interest, or if a petition in bankruptcy is filed against it, or if it is adjudicated bankrupt in involuntary proceedings, or if it should breach this contract in any material respect, the Parish shall have the right, at its unilateral option, to immediately cancel and terminate this contract. In the event that CONTRACTOR is placed in any chapter of bankruptcy, voluntarily or involuntarily, or otherwise triggers any provision of the preceding sentence herein, it is understood and agreed that all materials, goods and/or services provided shall be and remain the property of the Parish. All rights of CONTRACTOR as to goods, wares, products, services, materials and the like supplied to Parish shall be deemed forfeited.

16. AUDITORS

Notwithstanding other Sections herein, CONTRACTOR shall maintain all records for a period of three years after the date of final payment under this contract. It is hereby agreed that the Parish Department of Finance or its designated auditor shall have the sole, unilateral and exclusive option of auditing all accounts of CONTRACTOR which relate to this contract. Such audit may be commenced at any reasonable time. CONTRACTOR agrees not to delay, retard, interrupt or unduly interfere with commencement and completion of such an audit. If in the exclusive and unilateral opinion of the Parish that CONTRACTOR delays, retards, interferes with or otherwise interrupts such an audit, the Parish may seek such relief as per law. In such an event, CONTRACTOR agrees to be liable for all reasonable attorney fees, costs of auditors, court costs, and any other reasonably related expenses with such litigation

17. DISCRIMINATION CLAUSE

CONTRACTOR agrees to comply with the Americans with Disabilities Act of 1990 and any current amendments thereto. All individuals shall have equal access to employment opportunities available to a similarly suited individual. CONTRACTOR agrees not to discriminate in its employment practices, and will render services under this contract without regard to race, color, religion, sex, national origin, veteran status, political affiliation, or disabilities. Any act of discrimination committed by CONTRACTOR, or failure to comply with these statutory obligations when applicable shall be grounds for termination of this contract. CONTRACTOR agrees to abide by the requirements of all local, state, and/or federal law, including but not limited to the following: Title VI and VII of the Civil Rights Act of 1964, as amended by the Equal Opportunity Act of 1972, Federal Executive Order 11246, the Federal Rehabilitation Act of 1973, as amended, the Vietnam Era Veteran's Readjustment Assistance Act of 1974, Title IX of the Education Amendments of 1972, the Age Act of 1975, and the requirements of the Americans with Disabilities Act of 1990. CONTRACTOR warrants and guarantees that it is an Equal Employment Opportunity employer. In all hiring or employment made possible by or resulting from this Contract, there shall not be any discrimination against any person because of race, color, religion, sex, national origin, disability, age or veterans status; and where applicable, affirmative action will be taken to ensure that CONTRACTOR's employees are treated equally during employment without regard to their race, color, religion, sex, national origin, disability, age, political affiliation, disabilities or veteran status. This requirement shall apply to but not be limited to the following: employment upgrading, demotion, or transfer; recruitment or recruitment advertising; layoff or termination; rates of pay or other forms of compensation; and selection for training, including apprenticeship. All solicitations or advertisements for employees shall state that all applicants will receive consideration for employment without regard to race, color, religion, sex, national origin, disability, age or veteran status.

18. INDEPENDENT CONTRACTOR

A. While in the performance of services or carrying out obligations herein, the CONTRACTOR shall be acting in the capacity of an independent contractor and not as an employee of the Parish. The Parish shall not be obliged to any person, firm or corporation for any obligations of the CONTRACTOR arising from the performance of its services under this agreement. The CONTRACTOR shall not be authorized to represent the Parish with respect to services being performed, dealings with other agencies, and administration of specifically related contracts, unless done so in writing by the Parish.

B. CONTRACTOR hereby agrees to be responsible for payment of taxes from the funds thus received under this Contract. CONTRACTOR agrees to be responsible for and to pay all applicable federal income taxes, federal social security tax (or self-employment taxes in lieu thereof) and any other applicable federal or state unemployment taxes. CONTRACTOR agrees to indemnify and hold the Parish harmless for any and all federal and/or state income tax liability, including taxes, interest and penalties, resulting from the Parish's treatment of CONTRACTOR as independent contractor.

C. CONTRACTOR further agrees to reimburse Parish for any and all costs it incurs, including, but not limited to, accounting fees and legal fees, in defending itself against any such liability.

D. CONTRACTOR agrees and acknowledges that it (and its employees) is an **independent contractor** as defined in R.S. 23: 1021 (or any other provision of law) and as such nothing herein shall make CONTRACTOR an employee of the Parish nor create a partnership between CONTRACTOR and the Parish.

E. CONTRACTOR acknowledges exclusion of Workmen's Compensation Coverage. CONTRACTOR acknowledges of the exclusion of Unemployment Compensation Coverage.

F. CONTRACTOR agrees to a waiver of any and all sick and annual benefits from the Parish. It is expressly agreed and understood between the parties entering into this personal service contract, that CONTRACTOR, acting as an independent agent, shall not receive any sick and annual leave from the Parish.

19. NOTICES

All notices shall be by certified mail, return receipt requested, and sent to the following individuals at the following addresses. Changes of person and addresses are to be exchanged in a like manner:

Parish of Ascension: Office of the Parish President
P. O. Box 1659
Gonzales, LA 70707

CONTRACTOR:

20. AUTHORITY TO ENTER CONTRACT

The undersigned representative of CONTRACTOR warrants and personally guarantees that he/she has the requisite and necessary authority to enter and sign this contract on behalf of the corporate entity. The undersigned parties warrant and represent that they each have the respective authority and permission to enter this agreement. The Parish shall require, as an additional provision, that CONTRACTOR provide a certified copy of a corporate resolution authorizing the undersigned to enter and sign this agreement in the event that CONTRACTOR is a member of a corporation, partnership, LLC, LLP, and any other juridical entity.

This agreement is executed in two (2) originals. IN TESTIMONY WHEREOF, they have executed this agreement, the day and year first above written.

WITNESSES

_____
Title: Parish President
Ascension Parish Government
Date:

WITNESSES

_____
Title:
Date:

PART 2 - GENERAL CONDITIONS

PART 2 - ARTICLE 1: DEFINITIONS AND TERMINOLOGY

1.1 *Defined Terms*

A. Wherever used in the Bidding Requirements or Contract Documents and printed with initial capital letters, the terms listed below will have the meanings indicated which are applicable to both the singular and plural thereof. In addition to terms specifically defined, terms with initial capital letters in the Contract Documents include references to identified articles and paragraphs, and the titles of other documents or forms.

1. *Addenda*—Written or graphic instruments issued prior to the opening of Bids which clarify, correct, or change the Bidding Requirements or the proposed Contract Documents.

2. *Agreement*—The written instrument which is evidence of the agreement between Owner and Contractor covering the Work.

3. *Application for Payment*—The form acceptable to Engineer which is to be used by Contractor during the course of the Work in requesting progress or final payments and which is to be accompanied by such supporting documentation as is required by the Contract Documents.

4. *Asbestos*—Any material that contains more than one percent asbestos and is friable or is releasing asbestos fibers into the air above current action levels established by the United States Occupational Safety and Health Administration.

5. *Bid*—The offer or proposal of a Bidder submitted on the prescribed form setting forth the prices for the Work to be performed.

6. *Bidder*—The individual or entity who submits a Bid directly to Owner.

7. *Bidding Documents*—The Bidding Requirements and the proposed Contract Documents (including all Addenda).

8. *Bidding Requirements*—The advertisement or invitation to bid, Instructions to Bidders, Bid security of acceptable form, if any, and the Bid Form with any supplements.

9. *Change Order*—A document recommended by Engineer which is signed by Contractor and Owner and authorizes an addition, deletion, or revision in the Work or an adjustment in the Contract Price or the Contract Times, issued on or after the Effective Date of the Agreement.

10. *Claim*—A demand or assertion by Owner or Contractor seeking an adjustment of

Contract Price or Contract Times, or both, or other relief with respect to the terms of the Contract. A demand for money or services by a third party is not a Claim.

11. *Contract*—The entire and integrated written agreement between the Owner and Contractor concerning the Work. The Contract supersedes prior negotiations, representations, or agreements, whether written or oral.

12. *Contract Documents*—Those items so designated in the Agreement. Only printed or hard copies of the items listed in the Agreement are Contract Documents. Approved Shop Drawings, other Contractor submittals, and the reports and drawings of subsurface and physical conditions are not Contract Documents.

13. *Contract Price*—The moneys payable by Owner to Contractor for completion of the Work in accordance with the Contract Documents as stated in the Agreement (subject to the provisions of Paragraph 11.3 in the case of Unit Price Work).

14. *Contract Times*—The number of days or the dates stated in the Agreement to: (i) achieve Milestones, if any; (ii) achieve Substantial Completion; and (iii) complete the Work so that it is ready for final payment as evidenced by Engineer's written recommendation of final payment.

15. *Contractor*—The individual or entity with whom Owner has entered into the Agreement.

16. Cost of the Work—See Paragraph 11.1.A for definition.

17. *Drawings*—That part of the Contract Documents prepared or approved by Engineer which graphically shows the scope, extent, and character of the Work to be performed by Contractor. Shop Drawings and other Contractor submittals are not Drawings as so defined.

18. *Effective Date of the Agreement*—The date indicated in the Agreement on which it becomes effective, but if no such date is indicated, it means the date on which the Agreement is signed and delivered by the last of the two parties to sign and deliver.

19. *Engineer*—The individual or entity named as such in the Agreement.

20. *Field Order*—A written order issued by Engineer which requires minor changes in the Work but which does not involve a change in the Contract Price or the Contract Times.

21. *General Requirements*—Sections of Division 1 of the Specifications.

22. *Hazardous Environmental Condition*—The presence at the Site of Asbestos, PCBs, Petroleum, Hazardous Waste, or Radioactive Material in such quantities or circumstances that may present a substantial danger to persons or property exposed

thereto.

23. *Hazardous Waste*—The term Hazardous Waste shall have the meaning provided in Section 1004 of the Solid Waste Disposal Act (42 USC Section 6903) as amended from time to time.

24. *Laws and Regulations; Laws or Regulations*—Any and all applicable laws, rules, regulations, ordinances, codes, and orders of any and all governmental bodies, agencies, authorities, and courts having jurisdiction.

25. *Liens*—Charges, security interests, or encumbrances upon Project funds, real property, or personal property.

26. *Milestone*—A principal event specified in the Contract Documents relating to an intermediate completion date or time prior to Substantial Completion of all the Work.

27. *Notice of Award*—The written notice by Owner to the Successful Bidder stating that upon timely compliance by the Successful Bidder with the conditions precedent listed therein, Owner will sign and deliver the Agreement.

28. *Notice to Proceed*—A written notice given by Owner to Contractor fixing the date on which the Contract Times will commence to run and on which Contractor shall start to perform the Work under the Contract Documents.

29. *Owner*—The individual or entity with whom Contractor has entered into the Agreement and for whom the Work is to be performed.

30. *PCBs*—Polychlorinated biphenyls.

31. *Petroleum*—Petroleum, including crude oil or any fraction thereof which is liquid at standard conditions of temperature and pressure (60 degrees Fahrenheit and 14.7 pounds per square inch absolute), such as oil, petroleum, fuel oil, oil sludge, oil refuse, gasoline, kerosene, and oil mixed with other non-Hazardous Waste and crude oils.

32. *Progress Schedule*—A schedule, prepared and maintained by Contractor, describing the sequence and duration of the activities comprising the Contractor's plan to accomplish the Work within the Contract Times.

33. *Project*—The total construction of which the Work to be performed under the Contract Documents may be the whole, or a part.

34. *Project Manual*—The bound documentary information prepared for bidding and constructing the Work. A listing of the contents of the Project Manual, which may be bound in one or more volumes, is contained in the table(s) of contents.

35. *Radioactive Material*—Source, special nuclear, or byproduct material as defined by the Atomic Energy Act of 1954 (42 USC Section 2011 et seq.) as amended from time to time.

36. *Resident Project Representative*—The authorized representative of Engineer who may be assigned to the Site or any part thereof.

37. *Samples*—Physical examples of materials, equipment, or workmanship that are representative of some portion of the Work and which establish the standards by which such portion of the Work will be judged.

38. *Schedule of Submittals*—A schedule, prepared and maintained by Contractor, of required submittals and the time requirements to support scheduled performance of related construction activities.

39. *Schedule of Values*—A schedule, prepared and maintained by Contractor, allocating portions of the Contract Price to various portions of the Work and used as the basis for reviewing Contractor's Applications for Payment.

40. *Shop Drawings*—All drawings, diagrams, illustrations, schedules, and other data or information which are specifically prepared or assembled by or for Contractor and submitted by Contractor to illustrate some portion of the Work.

41. *Site*—Lands or areas indicated in the Contract Documents as being furnished by Owner upon which the Work is to be performed, including rights-of-way and easements for access thereto, and such other lands furnished by Owner which are designated for the use of Contractor.

42. *Specifications*—That part of the Contract Documents consisting of written requirements for materials, equipment, systems, standards and workmanship as applied to the Work, and certain administrative requirements and procedural matters applicable thereto.

43. *Subcontractor*—An individual or entity having a direct contract with Contractor or with any other Subcontractor for the performance of a part of the Work at the Site.

44. *Substantial Completion*—The time at which the Work (or a specified part thereof) has progressed to the point where, in the opinion of Engineer, the Work (or a specified part thereof) is sufficiently complete, in accordance with the Contract Documents, so that the Work (or a specified part thereof) can be utilized for the purposes for which it is intended. The terms "substantially complete" and "substantially completed" as applied to all or part of the Work refer to Substantial Completion thereof.

45. *Successful Bidder*—The Bidder submitting a responsive Bid to whom Owner makes an award.

46. *Supplementary Conditions*—That part of the Contract Documents which amends or supplements these General Conditions.

47. *Supplier*—A manufacturer, fabricator, supplier, distributor, materialman, or vendor having a direct contract with Contractor or with any Subcontractor to furnish materials or equipment to be incorporated in the Work by Contractor or Subcontractor.

48. *Underground Facilities*—All underground pipelines, conduits, ducts, cables, wires, manholes, vaults, tanks, tunnels, or other such facilities or attachments, and any encasements containing such facilities, including those that convey electricity, gases, steam, liquid petroleum products, telephone or other communications, cable television, water, wastewater, storm water, other liquids or chemicals, or traffic or other control systems.

49. *Unit Price Work*—Work to be paid for on the basis of unit prices.

50. *Work*—The entire construction or the various separately identifiable parts thereof required to be provided under the Contract Documents. Work includes and is the result of performing or providing all labor, services, and documentation necessary to produce such construction, and furnishing, installing, and incorporating all materials and equipment into such construction, all as required by the Contract Documents.

51. *Work Change Directive*—A written statement to Contractor issued on or after the Effective Date of the Agreement and signed by Owner and recommended by Engineer ordering an addition, deletion, or revision in the Work, or responding to differing or unforeseen subsurface or physical conditions under which the Work is to be performed or to emergencies. A Work Change Directive will not change the Contract Price or the Contract Times but is evidence that the parties expect that the change ordered or documented by a Work Change Directive will be incorporated in a subsequently issued Change Order following negotiations by the parties as to its effect, if any, on the Contract Price or Contract Times.

1.2 *Terminology*

A. The words and terms discussed in Paragraph 1.2.B through F are not defined but, when used in the Bidding Requirements or Contract Documents, have the indicated meaning.

B. *Intent of Certain Terms or Adjectives:*

1. The Contract Documents include the terms “as allowed,” “as approved,” “as ordered,” “as directed” or terms of like effect or import to authorize an exercise of professional judgment by Engineer. In addition, the adjectives “reasonable,” “suitable,” “acceptable,” “proper,” “satisfactory,” or adjectives of like effect or import are used to describe an action or determination of Engineer as to the Work. It is intended that such exercise of professional judgment, action, or determination will be solely to evaluate, in general, the Work for compliance with the information in the Contract Documents and with the design concept of the Project as a functioning whole as shown or indicated in the Contract Documents (unless there is a specific statement indicating otherwise). The use of any such term or adjective is not intended to and shall not be effective to

assign to Engineer any duty or authority to supervise or direct the performance of the Work, or any duty or authority to undertake responsibility contrary to the provisions of Paragraph 9.09 or any other provision of the Contract Documents.

C. *Day:*

1. The word "day" means a calendar day of 24 hours measured from midnight to the next midnight.

D. *Defective:*

1. The word "defective," when modifying the word "Work," refers to Work that is unsatisfactory, faulty, or deficient in that it:

a. does not conform to the Contract Documents; or

b. does not meet the requirements of any applicable inspection, reference standard, test, or approval referred to in the Contract Documents; or

c. has been damaged prior to Engineer's recommendation of final payment (unless responsibility for the protection thereof has been assumed by Owner at Substantial Completion in accordance with Paragraph 14.4 or 14.5).

E. *Furnish, Install, Perform, Provide:*

1. The word "furnish," when used in connection with services, materials, or equipment, shall mean to supply and deliver said services, materials, or equipment to the Site (or some other specified location) ready for use or installation and in usable or operable condition.

2. The word "install," when used in connection with services, materials, or equipment, shall mean to put into use or place in final position said services, materials, or equipment complete and ready for intended use.

3. The words "perform" or "provide," when used in connection with services, materials, or equipment, shall mean to furnish and install said services, materials, or equipment complete and ready for intended use.

4. When "furnish," "install," "perform," or "provide" is not used in connection with services, materials, or equipment in a context clearly requiring an obligation of Contractor, "provide" is implied.

F. Unless stated otherwise in the Contract Documents, words or phrases that have a well-known technical or construction industry or trade meaning are used in the Contract Documents in accordance with such recognized meaning.

PART 2 - ARTICLE 2: PRELIMINARY MATTERS

2.1 *Delivery of Bonds and Evidence of Insurance*

A. When Contractor delivers the executed counterparts of the Agreement to Owner, Contractor shall also deliver to Owner such bonds as Contractor may be required to furnish.

B. *Evidence of Insurance:* Before any Work at the Site is started, Contractor and Owner shall each deliver to the other, with copies to each additional insured identified in the Supplementary Conditions, certificates of insurance (and other evidence of insurance which either of them or any additional insured may reasonably request) which Contractor and Owner respectively are required to purchase and maintain in accordance with Article 5.

2.2 *Copies of Documents*

A. Owner shall furnish to Contractor up to two (2) printed or hard copies of the Drawings and Project Manual. Additional copies will be furnished upon request at the cost of reproduction.

2.3 *Commencement of Contract Times; Notice to Proceed*

A. The Contract Times will commence within thirty (30 calendar days after the Effective Date of the Agreement or, if a Notice to Proceed is given, on the day indicated in the Notice to Proceed.

2.4 *Starting the Work*

A. Contractor shall start to perform the Work on the date when the Contract Times commence to run. No Work shall be done at the Site prior to the date on which the Contract Times commence to run.

2.5 *Before Starting Construction*

A. *Preliminary Schedules:* Within 10 days after the Effective Date of the Agreement (unless otherwise specified in the General Requirements), Contractor shall submit to Engineer for timely review:

1. a preliminary Progress Schedule indicating the times (numbers of days or dates) for starting and completing the various stages of the Work, including any Milestones specified in the Contract Documents;

2. a preliminary Schedule of Submittals; and

3. a preliminary Schedule of Values for all of the Work which includes quantities and prices of items which when added together equal the Contract Price and subdivides

the Work into component parts in sufficient detail to serve as the basis for progress payments during performance of the Work. Such prices will include an appropriate amount of overhead and profit applicable to each item of Work.

2.6 *Preconstruction Conference; Designation of Authorized Representatives*

A. Before any Work at the Site is started, a conference attended by Owner, Contractor, Engineer, and others as appropriate will be held to establish a working understanding among the parties as to the Work and to discuss the schedules referred to in Paragraph 2.5.A, procedures for handling Shop Drawings and other submittals, processing Applications for Payment, and maintaining required records.

B. At this conference Owner and Contractor each shall designate, in writing, a specific individual to act as its authorized representative with respect to the services and responsibilities under the Contract. Such individuals shall have the authority to transmit instructions, receive information, render decisions relative to the Contract, and otherwise act on behalf of each respective party.

2.7 *Initial Acceptance of Schedules*

A. At least 10 days before submission of the first Application for Payment a conference attended by Contractor, Engineer, and others as appropriate will be held to review for acceptability to Engineer as provided below the schedules submitted in accordance with Paragraph 2.5.A. Contractor shall have an additional 10 days to make corrections and adjustments and to complete and resubmit the schedules. No progress payment shall be made to Contractor until acceptable schedules are submitted to Engineer.

1. The Progress Schedule will be acceptable to Engineer if it provides an orderly progression of the Work to completion within the Contract Times. Such acceptance will not impose on Engineer responsibility for the Progress Schedule, for sequencing, scheduling, or progress of the Work, nor interfere with or relieve Contractor from Contractor's full responsibility therefor.

2. Contractor's Schedule of Submittals will be acceptable to Engineer if it provides a workable arrangement for reviewing and processing the required submittals.

3. Contractor's Schedule of Values will be acceptable to Engineer as to form and substance if it provides a reasonable allocation of the Contract Price to component parts of the Work.

PART2: ARTICLE 3: CONTRACT DOCUMENTS: INTENT, AMENDING, REUSE

3.1 *Intent*

A. The Contract Documents are complementary; what is required by one is as binding as if required by all.

B. It is the intent of the Contract Documents to describe a functionally complete project (or part thereof) to be constructed in accordance with the Contract Documents. Any labor, documentation, services, materials, or equipment that reasonably may be inferred from the Contract Documents or from prevailing custom or trade usage as being required to produce the indicated result will be provided whether or not specifically called for, at no additional cost to Owner.

C. Clarifications and interpretations of the Contract Documents shall be issued by Engineer as provided in Article 9.

3.2 *Reference Standards*

D. Standards, Specifications, Codes, Laws, and Regulations

1. Reference to standards, specifications, manuals, or codes of any technical society, organization, or association, or to Laws or Regulations, whether such reference be specific or by implication, shall mean the standard, specification, manual, code, or Laws or Regulations in effect at the time of opening of Bids (or on the Effective Date of the Agreement if there were no Bids), except as may be otherwise specifically stated in the Contract Documents.

2. No provision of any such standard, specification, manual, or code, or any instruction of a Supplier, shall be effective to change the duties or responsibilities of Owner, Contractor, or Engineer, or any of their subcontractors, consultants, agents, or employees, from those set forth in the Contract Documents. No such provision or instruction shall be effective to assign to Owner, Engineer, or any of their officers, directors, members, partners, employees, agents, consultants, or subcontractors, any duty or authority to supervise or direct the performance of the Work or any duty or authority to undertake responsibility inconsistent with the provisions of the Contract Documents.

3.3 *Reporting and Resolving Discrepancies*

E. Reporting Discrepancies:

1. *Contractor's Review of Contract Documents Before Starting Work*: Before undertaking each part of the Work, Contractor shall carefully study and compare the Contract Documents and check and verify pertinent figures therein and all applicable field

measurements. Contractor shall promptly report in writing to Engineer any conflict, error, ambiguity, or discrepancy which Contractor discovers, or has actual knowledge of, and shall obtain a written interpretation or clarification from Engineer before proceeding with any Work affected thereby.

2. *Contractor's Review of Contract Documents During Performance of Work*: If, during the performance of the Work, Contractor discovers any conflict, error, ambiguity, or discrepancy within the Contract Documents, or between the Contract Documents and (a) any applicable Law or Regulation, (b) any standard, specification, manual, or code, or (c) any instruction of any Supplier, then Contractor shall promptly report it to Engineer in writing. Contractor shall not proceed with the Work affected thereby (except in an emergency as required by Paragraph 6.16.A) until an amendment or supplement to the Contract Documents has been issued by one of the methods indicated in Paragraph 3.04.

3. Contractor shall not be liable to Owner or Engineer for failure to report any conflict, error, ambiguity, or discrepancy in the Contract Documents unless Contractor had actual knowledge thereof.

F. *Resolving Discrepancies:*

1 Except as may be otherwise specifically stated in the Contract Documents, the provisions of the Contract Documents shall take precedence in resolving any conflict, error, ambiguity, or discrepancy between the provisions of the Contract Documents and:

a. the provisions of any standard, specification, manual, or code, or the instruction of any Supplier (whether or not specifically incorporated by reference in the Contract Documents); or

b. the provisions of any Laws or Regulations applicable to the performance of the Work (unless such an interpretation of the provisions of the Contract Documents would result in violation of such Law or Regulation).

3.4 *Amending and Supplementing Contract Documents*

G. The Contract Documents may be amended to provide for additions, deletions, and revisions in the Work or to modify the terms and conditions thereof by either a Change Order or a Work Change Directive.

H. The requirements of the Contract Documents may be supplemented, and minor variations and deviations in the Work may be authorized, by one or more of the following ways:

1. A Field Order;

2. Engineer's approval of a Shop Drawing or Sample (subject to the provisions of

Paragraph 6.17.D.3); or

3. Engineer's written interpretation or clarification.

3.5 *Reuse of Documents*

I. Contractor and any Subcontractor or Supplier shall not:

1. have or acquire any title to or ownership rights in any of the Drawings, Specifications, or other documents (or copies of any thereof) prepared by or bearing the seal of Engineer or its consultants, including electronic media editions; or
2. reuse any such Drawings, Specifications, other documents, or copies thereof on extensions of the Project or any other project without written consent of Owner and Engineer and specific written verification or adaptation by Engineer.

J. The prohibitions of this Paragraph 3.5 will survive final payment, or termination of the Contract. Nothing herein shall preclude Contractor from retaining copies of the Contract Documents for record purposes.

3.6 *Electronic Data*

K. Unless otherwise stated in the Supplementary Conditions, the data furnished by Owner or Engineer to Contractor, or by Contractor to Owner or Engineer, that may be relied upon are limited to the printed copies (also known as hard copies). Files in electronic media format of text, data, graphics, or other types are furnished only for the convenience of the receiving party. Any conclusion or information obtained or derived from such electronic files will be at the user's sole risk. If there is a discrepancy between the electronic files and the hard copies, the hard copies govern.

L. Because data stored in electronic media format can deteriorate or be modified inadvertently or otherwise without authorization of the data's creator, the party receiving electronic files agrees that it will perform acceptance tests or procedures within 60 days, after which the receiving party shall be deemed to have accepted the data thus transferred. Any errors detected within the 60-day acceptance period will be corrected by the transferring party.

M. When transferring documents in electronic media format, the transferring party makes no representations as to long term compatibility, usability, or readability of documents resulting from the use of software application packages, operating systems, or computer hardware differing from those used by the data's creator.

PART 2 - ARTICLE 4: AVAILABILITY OF LANDS; SUBSURFACE AND PHYSICAL CONDITIONS; HAZARDOUS ENVIRONMENTAL CONDITIONS; REFERENCE POINTS

4.1 *Availability of Lands*

A. Owner shall furnish the Site. Owner shall notify Contractor of any encumbrances or restrictions not of general application but specifically related to use of the Site with which Contractor must comply in performing the Work. Owner will obtain in a timely manner and pay for easements for permanent structures or permanent changes in existing facilities. If Contractor and Owner are unable to agree on entitlement to or on the amount or extent, if any, of any adjustment in the Contract Price or Contract Times, or both, as a result of any delay in Owner's furnishing the Site or a part thereof, Contractor may make a Claim therefor as provided in Paragraph 10.5.

B. Upon reasonable written request, Owner shall furnish Contractor with a current statement of record legal title and legal description of the lands upon which the Work is to be performed and Owner's interest therein as necessary for giving notice of or filing a mechanic's or construction lien against such lands in accordance with applicable Laws and Regulations.

C. Contractor shall provide for all additional lands and access thereto that may be required for temporary construction facilities or storage of materials and equipment.

4.2 *Subsurface and Physical Conditions*

A. *Reports and Drawings:* The Supplementary Conditions identify:

1. those reports known to Owner of explorations and tests of subsurface conditions at or contiguous to the Site; and

2. those drawings known to Owner of physical conditions relating to existing surface or subsurface structures at the Site (except Underground Facilities).

B. *Limited Reliance by Contractor on Technical Data Authorized:* Contractor may rely upon the accuracy of the "technical data" contained in such reports and drawings, but such reports and drawings are not Contract Documents. Such "technical data" is identified in the Supplementary Conditions. Except for such reliance on such "technical data," Contractor may not rely upon or make any claim against Owner or Engineer, or any of their officers, directors, members, partners, employees, agents, consultants, or subcontractors with respect to:

1. the completeness of such reports and drawings for Contractor's purposes, including,

but not limited to, any aspects of the means, methods, techniques, sequences, and procedures of construction to be employed by Contractor, and safety precautions and programs incident thereto; or

2. other data, interpretations, opinions, and information contained in such reports or shown or indicated in such drawings; or

3. any Contractor interpretation of or conclusion drawn from any "technical data" or any such other data, interpretations, opinions, or information.

4.3 *Differing Subsurface or Physical Conditions*

4.3.1 *Notice:* If Contractor believes that any subsurface or physical condition that is uncovered or revealed either:

4.3.1.1 is of such a nature as to establish that any "technical data" on which Contractor is entitled to rely as provided in Paragraph 4.2 is materially inaccurate; or

4.3.1.2 is of such a nature as to require a change in the Contract Documents; or

4.3.1.3 differs materially from that shown or indicated in the Contract Documents; or

4.3.1.4 is of an unusual nature, and differs materially from conditions ordinarily encountered and generally recognized as inherent in work of the character provided for in the Contract Documents; then Contractor shall, promptly after becoming aware thereof and before further disturbing the subsurface or physical conditions or performing any Work in connection therewith (except in an emergency as required by Paragraph 6.16.A), notify Owner and Engineer in writing about such condition. Contractor shall not further disturb such condition or perform any Work in connection therewith (except as aforesaid) until receipt of written order to do so.

4.3.2 *Engineer's Review*: After receipt of written notice as required by Paragraph 4.3.1, Engineer will promptly review the pertinent condition, determine the necessity of Owner's obtaining additional exploration or tests with respect thereto, and advise Owner in writing (with a copy to Contractor) of Engineer's findings and conclusions.

4.3.3 *Possible Price and Times* Adjustments*:*

4.3.3.1 The Contract Price or the Contract Times, or both, will be equitably adjusted to the extent that the existence of such differing subsurface or physical condition causes an increase or decrease in Contractor's cost of, or time required for, performance of the Work; subject, however, to the following:

a. such condition must meet any one or more of the categories described in Paragraph 4.3.A; and

b. with respect to Work that is paid for on a unit price basis, any adjustment in

Contract Price will be subject to the provisions of Paragraphs 9.7 and 11.3.

4.3.3.2 Contractor shall not be entitled to any adjustment in the Contract Price or Contract Times if:

a. Contractor knew of the existence of such conditions at the time Contractor made a final commitment to Owner with respect to Contract Price and Contract Times by the submission of a Bid or becoming bound under a negotiated contract; or the existence of such condition could reasonably have been discovered or revealed as a result of any examination, investigation, exploration, test, or study of the Site and contiguous areas required by the Bidding Requirements or Contract Documents to be conducted by or for Contractor prior to Contractor's making such final commitment; or

b. Contractor failed to give the written notice as required by Paragraph 4.3.1.

4.3.3.3 If Owner and Contractor are unable to agree on entitlement to or on the amount or extent, if any, of any adjustment in the Contract Price or Contract Times, or both, a Claim may be made therefor as provided in Paragraph 10.05. However, neither Owner or Engineer, or any of their officers, directors, members, partners, employees, agents, consultants, or subcontractors shall be liable to Contractor for any claims, costs, losses, or damages (including but not limited to all fees and charges of engineers, architects, attorneys, and other professionals and all court or arbitration or other dispute resolution costs) sustained by Contractor on or in connection with any other project or anticipated project.

4.4 *Underground Facilities*

4.4.1 *Shown or Indicated:* The information and data shown or indicated in the Contract Documents with respect to existing Underground Facilities at or contiguous to the Site is based on information and data furnished to Owner or Engineer by the owners of such Underground Facilities, including Owner, or by others. Unless it is otherwise expressly provided in the Supplementary Conditions:

4.4.1.1 Owner and Engineer shall not be responsible for the accuracy or completeness of any such information or data provided by others; and

4.4.1.2 the cost of all of the following will be included in the Contract Price, and Contractor shall have full responsibility for:

a. reviewing and checking all such information and data;

b. locating all Underground Facilities shown or indicated in the Contract Documents;

c. coordination of the Work with the owners of such Underground Facilities, including Owner, during construction; and

d. the safety and protection of all such Underground Facilities and repairing any damage thereto resulting from the Work.

4.4.2 *Not Shown or Indicated:*

4.4.2.1 If an Underground Facility is uncovered or revealed at or contiguous to the Site which was not shown or indicated, or not shown or indicated with reasonable accuracy in the Contract Documents, Contractor shall, promptly after becoming aware thereof and before further disturbing conditions affected thereby or performing any Work in connection therewith (except in an emergency as required by Paragraph 6.16.A), identify the owner of such Underground Facility and give written notice to that owner and to Owner and Engineer. Engineer will promptly review the Underground Facility and determine the extent, if any, to which a change is required in the Contract Documents to reflect and document the consequences of the existence or location of the Underground Facility. During such time, Contractor shall be responsible for the safety and protection of such Underground Facility.

4.4.2.2 If Engineer concludes that a change in the Contract Documents is required, a Work Change Directive or a Change Order will be issued to reflect and document such consequences. An equitable adjustment shall be made in the Contract Price or Contract Times, or both, to the extent that they are attributable to the existence or location of any Underground Facility that was not shown or indicated or not shown or indicated with reasonable accuracy in the Contract Documents and that Contractor did not know of and could not reasonably have been expected to be aware of or to have anticipated. If Owner and Contractor are unable to agree on entitlement to or on the amount or extent, if any, of any such adjustment in Contract Price or Contract Times, Owner or Contractor may make a Claim therefor as provided in Paragraph 10.5.

4.5 *Reference Points*

4.5.1 Owner shall provide engineering surveys to establish reference points for construction which in Engineer's judgment are necessary to enable Contractor to proceed with the Work. Contractor shall be responsible for laying out the Work, shall protect and preserve the established reference points and property monuments, and shall make no changes or relocations without the prior written approval of Owner. Contractor shall report to Engineer whenever any reference point or property monument is lost or destroyed or requires relocation because of necessary changes in grades or locations, and shall be responsible for the accurate replacement or relocation of such reference points or property monuments by professionally qualified personnel.

4.6 *Hazardous Environmental Condition at Site*

4.6.1 *Reports and Drawings:* The Supplementary Conditions identify those reports and drawings known to Owner relating to Hazardous Environmental Conditions that have been identified at the Site.

4.6.2 *Limited Reliance by Contractor on Technical Data Authorized:* Contractor may rely upon the accuracy of the "technical data" contained in such reports and drawings, but such reports and drawings are not Contract Documents. Such "technical data" is identified in the Supplementary Conditions. Except for such reliance on such "technical data," Contractor may not rely upon or make any claim against Owner or Engineer, or any of their officers, directors, members, partners, employees, agents, consultants, or subcontractors with respect to:

4.6.2.1 the completeness of such reports and drawings for Contractor's purposes, including, but not limited to, any aspects of the means, methods, techniques, sequences and procedures of construction to be employed by Contractor and safety precautions and programs incident thereto; or

4.6.2.2 other data, interpretations, opinions and information contained in such reports or shown or indicated in such drawings; or

4.6.2.3 any Contractor interpretation of or conclusion drawn from any "technical data" or any such other data, interpretations, opinions or information.

4.6.3 Contractor shall not be responsible for any Hazardous Environmental Condition uncovered or revealed at the Site which was not shown or indicated in Drawings or Specifications or identified in the Contract Documents to be within the scope of the Work. Contractor shall be responsible for a Hazardous Environmental Condition created with any materials brought to the Site by Contractor, Subcontractors, Suppliers, or anyone else for whom Contractor is responsible.

4.6.4 If Contractor encounters a Hazardous Environmental Condition or if Contractor or anyone for whom Contractor is responsible creates a Hazardous Environmental Condition, Contractor shall immediately: (i) secure or otherwise isolate such condition; (ii) stop all Work in connection with such condition and in any area affected thereby (except in an emergency as required by Paragraph 6.16.A); and (iii) notify Owner and Engineer (and promptly thereafter confirm such notice in writing). Owner shall promptly consult with Engineer concerning the necessity for Owner to retain a qualified expert to evaluate such condition or take corrective action, if any. Promptly after consulting with Engineer, Owner shall take such actions as are necessary to permit Owner to timely obtain required permits and provide Contractor the written notice required by Paragraph 4.6.E.

4.6.5 Contractor shall not be required to resume Work in connection with such condition or in any affected area until after Owner has obtained any required permits related thereto and delivered written notice to Contractor: (i) specifying that such condition and any affected area is or has been rendered safe for the resumption of Work; or (ii) specifying any special conditions under which such Work may be resumed safely. If Owner and Contractor cannot agree as to entitlement to or on the amount or extent, if any, of any adjustment in Contract Price or Contract Times, or both, as a result of such Work stoppage or such special conditions under which Work is agreed to be resumed by Contractor, either party may make a Claim therefor

as provided in Paragraph 10.5.

4.6.6 If after receipt of such written notice Contractor does not agree to resume such Work based on a reasonable belief it is unsafe, or does not agree to resume such Work under such special conditions, then Owner may order the portion of the Work that is in the area affected by such condition to be deleted from the Work. If Owner and Contractor cannot agree as to entitlement to or on the amount or extent, if any, of an adjustment in Contract Price or Contract Times as a result of deleting such portion of the Work, then either party may make a Claim therefor as provided in Paragraph 10.5. Owner may have such deleted portion of the Work performed by Owner's own forces or others in accordance with Article 7.

4.6.7 To the fullest extent permitted by Laws and Regulations, Owner shall indemnify and hold harmless Contractor, Subcontractors, and Engineer, and the officers, directors, members, partners, employees, agents, consultants, and subcontractors of each and any of them from and against all claims, costs, losses, and damages (including but not limited to all fees and charges of engineers, architects, attorneys, and other professionals and all court or arbitration or other dispute resolution costs) arising out of or relating to a Hazardous Environmental Condition, provided that such Hazardous Environmental Condition: (i) was not shown or indicated in the Drawings or Specifications or identified in the Contract Documents to be included within the scope of the Work, and (ii) was not created by Contractor or by anyone for whom Contractor is responsible. Nothing in this Paragraph
4.6.G shall obligate Owner to indemnify any individual or entity from and against the consequences of that individual's or entity's own negligence.

4.6.8 The provisions of Paragraphs 4.2, 4.3, and 4.4 do not apply to a Hazardous Environmental Condition uncovered or revealed at the Site.

PART 2 - ARTICLE 5: BONDS AND INSURANCE

5.1 *Performance, Payment, and Other Bonds*

A. Contractor shall furnish performance and payment bonds, each in an amount at least equal to the Contract Price as security for the faithful performance and payment of all of Contractor's obligations under the Contract Documents. These bonds shall remain in effect until one year after the date when final payment becomes due or until completion of the correction period specified in Paragraph 13.7, whichever is later, except as provided otherwise by Laws or Regulations or by the Contract Documents. Contractor shall also furnish such other bonds as are required by the Contract Documents. All bonds must be countersigned by a resident agent of the State in which the Project is done.

B. All bonds shall be in the form prescribed by the Contract Documents except as provided otherwise by Laws or Regulations, and shall be executed by such sureties as are named in the list of "Companies Holding Certificates of Authority as Acceptable Sureties on Federal Bonds and as Acceptable Reinsuring Companies" as published in Circular 570 (amended) by the Financial Management Service, Surety Bond Branch,
U.S. Department of the Treasury. All bonds signed by an agent or attorney-in-fact must be accompanied by a certified copy of that individual's authority to bind the surety. The evidence of authority shall show that it is effective on the date the agent or attorney- in-fact signed each bond.

C. If the surety on any bond furnished by Contractor is declared bankrupt or becomes insolvent or its right to do business is terminated in any state where any part of the Project is located or it ceases to meet the requirements of Paragraph 5.1.B, Contractor shall promptly notify Owner and Engineer and shall, within 20 days after the event giving rise to such notification, provide another bond and surety, both of which shall comply with the requirements of Paragraphs 5.1.B and 5.2.

5.2 *Licensed Sureties and Insurers*

A. All bonds and insurance required by the Contract Documents to be purchased and maintained by Owner or Contractor shall be obtained from surety or insurance companies that are duly licensed or authorized in the jurisdiction in which the Project is located to issue bonds or insurance policies for the limits and coverages so required. Such surety and insurance companies shall also meet such additional requirements and qualifications as may be provided in the Supplementary Conditions.

5.3 *Certificates of Insurance*

A. Contractor shall deliver to Owner, with copies to each additional insured and loss payee identified in the Supplementary Conditions, certificates of insurance (and other evidence of insurance requested by Owner or any other additional insured) which Contractor is required to purchase and maintain.

B. Owner shall deliver to Contractor, with copies to each additional insured and loss payee identified in the Supplementary Conditions, certificates of insurance (and other evidence of insurance requested by Contractor or any other additional insured) which Owner is required to purchase and maintain.

C. Failure of Owner to demand such certificates or other evidence of Contractor's full compliance with these insurance requirements or failure of Owner to identify a deficiency in compliance from the evidence provided shall not be construed as a waiver of Contractor's obligation to maintain such insurance.

D. Owner does not represent that insurance coverage and limits established in this Contract necessarily will be adequate to protect Contractor.

E. The insurance and insurance limits required herein shall not be deemed as a limitation on Contractor's liability under the indemnities granted to Owner in the Contract Documents.

5.4 *Contractor's Insurance*

A. Contractor shall purchase and maintain such insurance as is appropriate for the Work being performed and as will provide protection from claims set forth below which may arise out of or result from Contractor's performance of the Work and Contractor's other obligations under the Contract Documents, whether it is to be performed by Contractor, any Subcontractor or Supplier, or by anyone directly or indirectly employed by any of them to perform any of the Work, or by anyone for whose acts any of them may be liable:

1. claims under workers' compensation, disability benefits, and other similar employee benefit acts;

2. claims for damages because of bodily injury, occupational sickness or disease, or death of Contractor's employees;

3. claims for damages because of bodily injury, sickness or disease, or death of any person other than Contractor's employees;

4. claims for damages insured by reasonably available personal injury liability coverage which are sustained:

5. by any person as a result of an offense directly or indirectly related to the employment of such person by Contractor, or

6. by any other person for any other reason;

7. claims for damages, other than to the Work itself, because of injury to or destruction of tangible property wherever located, including loss of use resulting therefrom; and

8. claims for damages because of bodily injury or death of any person or property damage arising out of the ownership, maintenance or use of any motor vehicle.

B. The policies of insurance required by this Paragraph 5.4 shall:

1. with respect to insurance required by Paragraphs 5.4.A.3 through 5.4.A.6 inclusive, be written on an occurrence basis, include as additional insureds (subject to any customary exclusion regarding professional liability) Owner and Engineer, and any other individuals or entities identified in the Supplementary Conditions, all of whom shall be listed as additional insureds, and include coverage for the respective officers, directors, members, partners, employees, agents, consultants, and subcontractors of each and any of all such additional insureds, and the insurance afforded to these additional insureds shall provide primary coverage for all claims covered thereby;

2. include at least the specific coverages and be written for not less than the limits of liability provided in the Supplementary Conditions or required by Laws or Regulations, whichever is greater;

3. include contractual liability insurance covering Contractor's indemnity obligations under Paragraphs 6.11 and 6.20;

4. contain a provision or endorsement that the coverage afforded will not be canceled, materially changed or renewal refused until at least 30 days prior written notice has been given to Owner and Contractor and to each other additional insured identified in the Supplementary Conditions to whom a certificate of insurance has been issued (and the certificates of insurance furnished by the Contractor pursuant to Paragraph 5.03 will so provide);

5. remain in effect at least until final payment and at all times thereafter when Contractor may be correcting, removing, or replacing defective Work in accordance with Paragraph 13.7; and

6. include completed operations coverage.

C. The limits of liability for the insurance required by Paragraph 5.4 of the General Conditions shall provide coverage for not less than the following amounts or greater where required by Laws and Regulations:

1. Workers' Compensation, and related coverages under Paragraphs 5.4.A.1 and A.2 of the General Conditions:

a.	State:	Statutory
b.	Applicable Federal (e.g., Longshoreman's):	Statutory
c.	Employer's Liability:	Statutory

2. Contractor's General Liability under Paragraphs 5.4.A.3 through A.6 of the General Conditions which shall include completed operations and product liability coverages and eliminate the exclusion with respect to property under the care, custody and control of Contractor:

a.	General Aggregate	$500,000
b.	Products Completed Operations Aggregate	$500,000
c.	Personal and Advertising Injury	$500,000
d.	Each Occurrence (Bodily Injury and Property Damage)	$500,000
e.	Property Damage liability insurance will provide Explosion, Collapse, and Under-ground coverages where applicable	
f.	Excess or Umbrella Liability General Aggregate	$1,000,000
	Each Occurrence	$500,000

3. Automobile Liability under Paragraph 5.4.A.6 of the General Conditions:

a.	Bodily Injury:	
	Each person	$500,000
	Each Accident	$500,000
b.	Property Damage:	
	Each Accident	$500,000 or
	Combined Single Limit of	$500,000

4. The Contractual Liability coverage required by Paragraph 5.4.B.4 of the General Conditions shall provide coverage for not less than the following amounts:

a.	Bodily Injury:	
	Each person	$100,000
	Each Accident	$300,000
b.	Property Damage:	
	Each Accident	$300,000

D. Contractor shall furnish Owner and each other additional insured identified in the Supplementary Conditions, to whom a certificate of insurance has been issued, evidence satisfactory to Owner and any such additional insured of continuation of such insurance at final payment and one year thereafter.

5.5 *Owner's Liability Insurance*

A. In addition to the insurance required to be provided by Contractor under Paragraph 5.4, Owner, at Owner's option, may purchase and maintain at Owner's expense Owner's own liability insurance as will protect Owner against claims which may arise from operations

under the Contract Documents.

5.6 *Property Insurance*

A. Contractor shall purchase and maintain property insurance upon Work at the Sites in the amount of the full replacement cost thereof. Contractor shall be responsible for any deductible or self-insured retention. This insurance shall:

1. include the interests of Owner, Contractor, Subcontractors, Engineer, and the officers, directors, partners, employees, agents and other consultants, and subcontractors of any of them, each of whom is deemed to have an insurable interest and shall be listed as a loss payee;

2. be written on a Builder's Risk "all-risk" policy form that shall at least include insurance for physical loss or damage to the Work, temporary buildings, falsework, and materials and equipment in transit, and shall insure against at least the following perils or causes of loss: fire, lightning, extended coverage, theft, vandalism and malicious mischief, earthquake, collapse, debris removal, demolition occasioned by enforcement of Laws and Regulations, water damage (other than that caused by flood), and such other perils or causes of loss as may be specifically required by the Supplementary Conditions.

3. include expenses incurred in the repair or replacement of any insured property (including but not limited to fees and charges of engineers and architects);

4. cover materials and equipment stored at the Site or at another location that was agreed to in writing by Owner prior to being incorporated in the Work, provided that such materials and equipment have been included in an Application for Payment recommended by Engineer;

5. allow for partial utilization of the Work by Owner;

6. include testing and startup;

7. be maintained in effect until final payment is made unless otherwise agreed to in writing by Owner, Contractor, and Engineer with 30 days written notice to each other loss payee to whom a certificate of insurance has been issued; and

8. comply with the requirements of Paragraph 5.6C of the general Conditions.

B. Contractor shall purchase and maintain such equipment breakdown insurance or additional property insurance as may be required by the Supplementary Conditions or Laws and Regulations which will include the interests of Owner, Contractor, Subcontractors, and Engineer, and any other individuals or entities identified in the Supplementary Conditions, and the officers, directors, members, partners, employees, agents, consultants and subcontractors of each and any of them, each of whom is deemed to have an insurable

interest and shall be listed as a loss payee.

C. All the policies of insurance (and the certificates or other evidence thereof) required to be purchased and maintained in accordance with this Paragraph 5.6 will contain a provision or endorsement that the coverage afforded will not be canceled or materially changed or renewal refused until at least 30 days prior written notice has been given to Owner and Contractor and to each other loss payee to whom a certificate of insurance has been issued and will contain waiver provisions in accordance with Paragraph 5.7.

D. Owner shall not be responsible for purchasing and maintaining any property insurance specified in this Paragraph 5.06 to protect the interests of Contractor, Subcontractors, or others in the Work to the extent of any deductible amounts that are identified in the Supplementary Conditions. The risk of loss within such identified deductible amount will be borne by Contractor, Subcontractors, or others suffering any such loss, and if any of them wishes property insurance coverage within the limits of such amounts, each may purchase and maintain it at the purchaser's own expense.

If Contractor requests in writing that other special insurance be included in the property insurance policies provided under this Paragraph 5.6, Owner shall, if possible, include such insurance, and the cost thereof will be charged to Contractor by appropriate Change Order. Prior to commencement of the Work at the Site, Owner shall in writing advise Contractor whether or not such other insurance has been procured by Owner.

5.7 *Waiver of Rights*

A. Owner and Contractor intend that all policies purchased in accordance with Paragraph 5.6 will protect Owner, Contractor, Subcontractors, and Engineer, and all other individuals or entities identified in the Supplementary Conditions as loss payees (and the officers, directors, members, partners, employees, agents, consultants, and subcontractors of each and any of them) in such policies and will provide primary coverage for all losses and damages caused by the perils or causes of loss covered thereby. All such policies shall contain provisions to the effect that in the event of payment of any loss or damage the insurers will have no rights of recovery against any of the insurers or loss payees thereunder. Owner and Contractor waive all rights against each other and their respective officers, directors, members, partners, employees, agents, consultants and subcontractors of each and any of them for all losses and damages caused by, arising out of or resulting from any of the perils or causes of loss covered by such policies and any other property insurance applicable to the Work; and, in addition, waive all such rights against Subcontractors and Engineer, and all other individuals or entities identified in the Supplementary Conditions as loss payees (and the officers, directors, members, partners, employees, agents, consultants, and subcontractors of each and any of them) under such policies for losses and damages so caused. None of the above waivers shall extend to the rights that any party making such waiver may have to the proceeds of insurance held by Owner as trustee or otherwise payable under any policy so issued.

B. Owner waives all rights against Contractor, Subcontractors, and Engineer, and the officers, directors, members, partners, employees, agents, consultants and subcontractors of each and any of them for:

1. loss due to business interruption, loss of use, or other consequential loss extending beyond direct physical loss or damage to Owner's property or the Work caused by, arising out of, or resulting from fire or other perils whether or not insured by Owner; and

2. loss or damage to the completed Project or part thereof caused by, arising out of, or resulting from fire or other insured peril or cause of loss covered by any property insurance maintained on the completed Project or part thereof by Owner during partial utilization pursuant to Paragraph 14.5, after Substantial Completion pursuant to Paragraph 14.4, or after final payment pursuant to Paragraph 14.7.

C. Any insurance policy maintained by Owner covering any loss, damage or consequential loss referred to in Paragraph 5.7.B shall contain provisions to the effect that in the event of payment of any such loss, damage, or consequential loss, the insurers will have no rights of recovery against Contractor, Subcontractors, or Engineer, and the officers, directors, members, partners, employees, agents, consultants and subcontractors of each and any of them.

5.8 *Receipt and Application of Insurance Proceeds*

A. Any insured loss under the policies of insurance required by Paragraph 5.6 will be adjusted with Owner and made payable to Owner as fiduciary for the loss payees, as their interests may appear, subject to the requirements of any applicable mortgage clause and of Paragraph 5.8.B. Owner shall deposit in a separate account any money so received and shall distribute it in accordance with such agreement as the parties in interest may reach. If no other special agreement is reached, the damaged Work shall be repaired or replaced, the moneys so received applied on account thereof, and the Work and the cost thereof covered by an appropriate Change Order.

B. Owner as fiduciary shall have power to adjust and settle any loss with the insurers unless one of the parties in interest shall object in writing within 15 days after the occurrence of loss to Owner's exercise of this power. If such objection be made, Owner as fiduciary shall make settlement with the insurers in accordance with such agreement as the parties in interest may reach. If no such agreement among the parties in interest is reached, Owner as fiduciary shall adjust and settle the loss with the insurers and, if required in writing by any party in interest, Owner as fiduciary shall give bond for the proper performance of such duties.

5.9 *Acceptance of Bonds and Insurance; Option to Replace*

A. If either Owner or Contractor has any objection to the coverage afforded by or other provisions of the bonds or insurance required to be purchased and maintained by the other

party in accordance with Article 5 on the basis of non-conformance with the Contract Documents, the objecting party shall so notify the other party in writing within 10 days after receipt of the certificates (or other evidence requested) required by Paragraph 2.1.B. Owner and Contractor shall each provide to the other such additional information in respect of insurance provided as the other may reasonably request. If either party does not purchase or maintain all of the bonds and insurance required of such party by the Contract Documents, such party shall notify the other party in writing of such failure to purchase prior to the start of the Work, or of such failure to maintain prior to any change in the required coverage. Without prejudice to any other right or remedy, the other party may elect to obtain equivalent bonds or insurance to protect such other party's interests at the expense of the party who was required to provide such coverage, and a Change Order shall be issued to adjust the Contract Price accordingly.

5.10 *Partial Utilization, Acknowledgment of Property Insurer*

A. If Owner finds it necessary to occupy or use a portion or portions of the Work prior to Substantial Completion of all the Work as provided in Paragraph 14.5, no such use or occupancy shall commence before the insurers providing the property insurance pursuant to Paragraph 5.6 have acknowledged notice thereof and in writing effected any changes in coverage necessitated thereby. The insurers providing the property insurance shall consent by endorsement on the policy or policies, but the property insurance shall not be canceled or permitted to lapse on account of any such partial use or occupancy.

PART 2 - ARTICLE 6: CONTRACTOR'S RESPONSIBILITIES

6.1 *Supervision and Superintendence*

A. Contractor shall supervise, inspect, and direct the Work competently and efficiently, devoting such attention thereto and applying such skills and expertise as may be necessary to perform the Work in accordance with the Contract Documents. Contractor shall be solely responsible for the means, methods, techniques, sequences, and procedures of construction. Contractor shall not be responsible for the negligence of Owner or Engineer in the design or specification of a specific means, method, technique, sequence, or procedure of construction which is shown or indicated in and expressly required by the Contract Documents.

B. At all times during the progress of the Work, Contractor shall assign a competent resident superintendent who shall not be replaced without written notice to Owner and Engineer except under extraordinary circumstances.

6.2 *Labor; Working Hours*

A. Contractor shall provide competent, suitably qualified personnel to survey and lay out the Work and perform construction as required by the Contract Documents. Contractor shall at all times maintain good discipline and order at the Site.

B. Except as otherwise required for the safety or protection of persons or the Work or property at the Site or adjacent thereto, and except as otherwise stated in the Contract Documents, all Work at the Site shall be performed during regular working hours (6am-6pm). Contractor will not permit the performance of Work on a Saturday, Sunday, or any legal holiday without Owner's written consent (which will not be unreasonably withheld) given after prior written notice to Engineer.

6.3 *Services, Materials, and Equipment*

A. Unless otherwise specified in the Contract Documents, Contractor shall provide and assume full responsibility for all services, materials, equipment, labor, transportation, construction equipment and machinery, tools, appliances, fuel, power, light, heat, telephone, water, sanitary facilities, temporary facilities, and all other facilities and incidentals necessary for the performance, testing, start-up, and completion of the Work.

B. All materials and equipment incorporated into the Work shall be as specified or, if not specified, shall be of good quality and new, except as otherwise provided in the Contract Documents. All special warranties and guarantees required by the Specifications shall expressly run to the benefit of Owner. If required by Engineer, Contractor shall furnish satisfactory evidence (including reports of required tests) as to the source, kind, and quality of materials and equipment.

C. All materials and equipment shall be stored, applied, installed, connected, erected, protected, used, cleaned, and conditioned in accordance with instructions of the applicable Supplier, except as otherwise may be provided in the Contract Documents.

6.4 *Progress Schedule*

A. Contractor shall adhere to the Progress Schedule established in accordance with Paragraph 2.7 as it may be adjusted from time to time as provided below.

1. Contractor shall submit to Engineer for acceptance (to the extent indicated in Paragraph 2.7) proposed adjustments in the Progress Schedule that will not result in changing the Contract Times. Such adjustments will comply with any provisions of the General Requirements applicable thereto.

2. Proposed adjustments in the Progress Schedule that will change the Contract Times shall be submitted in accordance with the requirements of Article 12. Adjustments in Contract Times may only be made by a Change Order.

6.5 *Substitutes and "Or-Equals"*

A. Whenever an item of material or equipment is specified or described in the Contract Documents by using the name of a proprietary item or the name of a particular Supplier, the specification or description is intended to establish the type, function, appearance, and quality required. Unless the specification or description contains or is followed by words reading that no like, equivalent, or "or-equal" item or no substitution is permitted, other items of material or equipment or material or equipment of other Suppliers may be submitted to Engineer for review under the circumstances described below.

1. *"Or-Equal" Items:* If in Engineer's sole discretion an item of material or equipment proposed by Contractor is functionally equal to that named and sufficiently similar so that no change in related Work will be required, it may be considered by Engineer as an "or-equal" item, in which case review and approval of the proposed item may, in Engineer's sole discretion, be accomplished without compliance with some or all of the requirements for approval of proposed substitute items. For the purposes of this Paragraph 6.5.A.1, a proposed item of material or equipment will be considered functionally equal to an item so named if:

a. in the exercise of reasonable judgment Engineer determines that:

1) it is at least equal in materials of construction, quality, durability, appearance, strength, and design characteristics;

2) it will reliably perform at least equally well the function and achieve the results imposed by the design concept of the completed Project as a functioning whole;

and

3) it has a proven record of performance and availability of responsive service.

b. Contractor certifies that, if approved and incorporated into the Work:

1) there will be no increase in cost to the Owner or increase in Contract Times; and

2) it will conform substantially to the detailed requirements of the item named in the Contract Documents.

2. *Substitute Items:*

a. If in Engineer's sole discretion an item of material or equipment proposed by Contractor does not qualify as an "or-equal" item under Paragraph 6.5.A.1, it will be considered a proposed substitute item.

b. Contractor shall submit sufficient information as provided below to allow Engineer to determine if the item of material or equipment proposed is essentially equivalent to that named and an acceptable substitute therefor. Requests for review of proposed substitute items of material or equipment will not be accepted by Engineer from anyone other than Contractor.

c. The requirements for review by Engineer will be as set forth in Paragraph 6.5.A.2.d, as supplemented by the General Requirements, and as Engineer may decide is appropriate under the circumstances.

d. Contractor shall make written application to Engineer for review of a proposed substitute item of material or equipment that Contractor seeks to furnish or use. The application:

1) shall certify that the proposed substitute item will:

a) perform adequately the functions and achieve the results called for by the general design,

b) be similar in substance to that specified, and

c) be suited to the same use as that specified;

2) will state:

a) the extent, if any, to which the use of the proposed substitute item will prejudice Contractor's achievement of Substantial Completion on time,

b) whether use of the proposed substitute item in the Work will require a change in any of the Contract Documents (or in the provisions of any other direct contract with Owner for other work on the Project) to adapt the design to the proposed substitute item, and

c) whether incorporation or use of the proposed substitute item in connection with the Work is subject to payment of any license fee or royalty;

3) will identify:

a) all variations of the proposed substitute item from that specified, and

b) available engineering, sales, maintenance, repair, and replacement services; and

4) shall contain an itemized estimate of all costs or credits that will result directly or indirectly from use of such substitute item, including costs of redesign and claims of other contractors affected by any resulting change.

B. *Substitute Construction Methods or Procedures:* If a specific means, method, technique, sequence, or procedure of construction is expressly required by the Contract Documents, Contractor may furnish or utilize a substitute means, method, technique, sequence, or procedure of construction approved by Engineer. Contractor shall submit sufficient information to allow Engineer, in Engineer's sole discretion, to determine that the substitute proposed is equivalent to that expressly called for by the Contract Documents. The requirements for review by Engineer will be similar to those provided in Paragraph 6.5.A.2.

C. *Engineer's Evaluation:* Engineer will be allowed a reasonable time within which to evaluate each proposal or submittal made pursuant to Paragraphs 6.5.A and 6.5.B. Engineer may require Contractor to furnish additional data about the proposed substitute item. Engineer will be the sole judge of acceptability. No "or equal" or substitute will be ordered, installed or utilized until Engineer's review is complete, which will be evidenced by a Change Order in the case of a substitute and an approved Shop Drawing for an "or equal." Engineer will advise Contractor in writing of any negative determination.

D. *Special Guarantee:* Owner may require Contractor to furnish at Contractor's expense a special performance guarantee or other surety with respect to any substitute.

E. *Engineer's Cost Reimbursement*: Engineer will record Engineer's costs in evaluating a substitute proposed or submitted by Contractor pursuant to Paragraphs 6.5.A.2 and 6.5.B. Whether or not Engineer approves a substitute so proposed or submitted by Contractor, Contractor shall reimburse Owner for the reasonable charges of Engineer for evaluating each such proposed substitute. Contractor shall also reimburse Owner for the reasonable charges of Engineer for making changes in the Contract Documents (or in the provisions of any other direct contract with Owner) resulting from the acceptance of each

proposed substitute.

F. *Contractor's Expense*: Contractor shall provide all data in support of any proposed substitute or "or-equal" at Contractor's expense.

6.6 *Concerning Subcontractors, Suppliers, and Others*

A. Contractor shall not employ any Subcontractor, Supplier, or other individual or entity (including those acceptable to Owner as indicated in Paragraph 6.06.B), whether initially or as a replacement, against whom Owner may have reasonable objection. Contractor shall not be required to employ any Subcontractor, Supplier, or other individual or entity to furnish or perform any of the Work against whom Contractor has reasonable objection.

B. If the Supplementary Conditions require the identity of certain Subcontractors, Suppliers, or other individuals or entities to be submitted to Owner in advance for acceptance by Owner by a specified date prior to the Effective Date of the Agreement, and if Contractor has submitted a list thereof in accordance with the Supplementary Conditions, Owner's acceptance (either in writing or by failing to make written objection thereto by the date indicated for acceptance or objection in the Bidding Documents or the Contract Documents) of any such Subcontractor, Supplier, or other individual or entity so identified may be revoked on the basis of reasonable objection after due investigation. Contractor shall submit an acceptable replacement for the rejected Subcontractor, Supplier, or other individual or entity, and the Contract Price will be adjusted by the difference in the cost occasioned by such replacement, and an appropriate Change Order will be issued. No acceptance by Owner of any such Subcontractor, Supplier, or other individual or entity, whether initially or as a replacement, shall constitute a waiver of any right of Owner or Engineer to reject defective Work.

C. Contractor shall be fully responsible to Owner and Engineer for all acts and omissions of the Subcontractors, Suppliers, and other individuals or entities performing or furnishing any of the Work just as Contractor is responsible for Contractor's own acts and omissions. Nothing in the Contract Documents:

1. shall create for the benefit of any such Subcontractor, Supplier, or other individual or entity any contractual relationship between Owner or Engineer and any such Subcontractor, Supplier or other individual or entity; nor

2. shall create any obligation on the part of Owner or Engineer to pay or to see to the payment of any moneys due any such Subcontractor, Supplier, or other individual or entity except as may otherwise be required by Laws and Regulations.

D. Contractor shall be solely responsible for scheduling and coordinating the Work of Subcontractors, Suppliers, and other individuals or entities performing or furnishing any of the Work under a direct or indirect contract with Contractor.

E. Contractor shall require all Subcontractors, Suppliers, and such other individuals or entities performing or furnishing any of the Work to communicate with Engineer through Contractor.

F. The divisions and sections of the Specifications and the identifications of any Drawings shall not control Contractor in dividing the Work among Subcontractors or Suppliers or delineating the Work to be performed by any specific trade.

G. All Work performed for Contractor by a Subcontractor or Supplier will be pursuant to an appropriate agreement between Contractor and the Subcontractor or Supplier which specifically binds the Subcontractor or Supplier to the applicable terms and conditions of the Contract Documents for the benefit of Owner and Engineer. Whenever any such agreement is with a Subcontractor or Supplier who is listed as a loss payee on the property insurance provided in Paragraph 5.6, the agreement between the Contractor and the Subcontractor or Supplier will contain provisions whereby the Subcontractor or Supplier waives all rights against Owner, Contractor, Engineer, and all other individuals or entities identified in the Supplementary Conditions to be listed as insureds or loss payees (and the officers, directors, members, partners, employees, agents, consultants, and subcontractors of each and any of them) for all losses and damages caused by, arising out of, relating to, or resulting from any of the perils or causes of loss covered by such policies and any other property insurance applicable to the Work. If the insurers on any such policies require separate waiver forms to be signed by any Subcontractor or Supplier, Contractor will obtain the same.

H. Owner may furnish to any Subcontractor or Supplier, to the extent practical, information about amounts paid to Contractor on account of Work performed for Contractor by a particular Subcontractor or Supplier.

6.7 *Patent Fees and Royalties*

A. Contractor shall pay all license fees and royalties and assume all costs incident to the use in the performance of the Work or the incorporation in the Work of any invention, design, process, product, or device which is the subject of patent rights or copyrights held by others. If a particular invention, design, process, product, or device is specified in the Contract Documents for use in the performance of the Work and if, to the actual knowledge of Owner or Engineer, its use is subject to patent rights or copyrights calling for the payment of any license fee or royalty to others, the existence of such rights shall be disclosed by Owner in the Contract Documents.

B. To the fullest extent permitted by Laws and Regulations, Owner shall indemnify and hold harmless Contractor, and its officers, directors, members, partners, employees, agents, consultants, and subcontractors from and against all claims, costs, losses, and damages (including but not limited to all fees and charges of engineers, architects, attorneys, and other professionals, and all court or arbitration or other dispute resolution costs) arising out

of or relating to any infringement of patent rights or copyrights incident to the use in the performance of the Work or resulting from the incorporation in the Work of any invention, design, process, product, or device specified in the Contract Documents, but not identified as being subject to payment of any license fee or royalty to others required by patent rights or copyrights.

C. To the fullest extent permitted by Laws and Regulations, Contractor shall indemnify and hold harmless Owner and Engineer, and the officers, directors, members, partners, employees, agents, consultants and subcontractors of each and any of them from and against all claims, costs, losses, and damages (including but not limited to all fees and charges of engineers, architects, attorneys, and other professionals and all court or arbitration or other dispute resolution costs) arising out of or relating to any infringement of patent rights or copyrights incident to the use in the performance of the Work or resulting from the incorporation in the Work of any invention, design, process, product, or device not specified in the Contract Documents.

6.8 *Permits*

A. Unless otherwise provided in the Supplementary Conditions, Contractor shall obtain and pay for all construction permits and licenses. Owner shall assist Contractor, when necessary, in obtaining such permits and licenses. Contractor shall pay all governmental charges and inspection fees necessary for the prosecution of the Work which are applicable at the time of opening of Bids, or, if there are no Bids, on the Effective Date of the Agreement. Owner shall pay all charges of utility owners for connections for providing permanent service to the Work.

6.9 *Laws and Regulations*

A. Contractor shall give all notices required by and shall comply with all Laws and Regulations applicable to the performance of the Work. Except where otherwise expressly required by applicable Laws and Regulations, neither Owner nor Engineer shall be responsible for monitoring Contractor's compliance with any Laws or Regulations.

If Contractor performs any Work knowing or having reason to know that it is contrary to Laws or Regulations, Contractor shall bear all claims, costs, losses, and damages (including but not limited to all fees and charges of engineers, architects, attorneys, and other professionals and all court or arbitration or other dispute resolution costs) arising out of or relating to such Work. However, it shall not be Contractor's responsibility to make certain that the Specifications and Drawings are in accordance with Laws and Regulations, but this shall not relieve Contractor of Contractor's obligations under Paragraph 3.3.

B. Changes in Laws or Regulations not known at the time of opening of Bids (or, on the Effective Date of the Agreement if there were no Bids) having an effect on the cost or time of performance of the Work shall be the subject of an adjustment in Contract Price or Contract Times. If Owner and Contractor are unable to agree on entitlement to or on the

amount or extent, if any, of any such adjustment, a Claim may be made therefor as provided in Paragraph 10.05.

6.10 *Taxes*

A. Contractor shall pay all sales, consumer, use, and other similar taxes required to be paid by Contractor in accordance with the Laws and Regulations of the place of the Project which are applicable during the performance of the Work.

6.11 *Use of Site and Other Areas*

A. Limitation on Use of Site and Other Areas:

1. Contractor shall confine construction equipment, the storage of materials and equipment, and the operations of workers to the Site and other areas permitted by Laws and Regulations, and shall not unreasonably encumber the Site and other areas with construction equipment or other materials or equipment. Contractor shall assume full responsibility for any damage to any such land or area, or to the owner or occupant thereof, or of any adjacent land or areas resulting from the performance of the Work.

2. Should any claim be made by any such owner or occupant because of the performance of the Work, Contractor shall promptly settle with such other party by negotiation or otherwise resolve the claim by arbitration or other dispute resolution proceeding or at law.

3. To the fullest extent permitted by Laws and Regulations, Contractor shall indemnify and hold harmless Owner and Engineer, and the officers, directors, members, partners, employees, agents, consultants and subcontractors of each and any of them from and against all claims, costs, losses, and damages (including but not limited to all fees and charges of engineers, architects, attorneys, and other professionals and all court or arbitration or other dispute resolution costs) arising out of or relating to any claim or action, legal or equitable, brought by any such owner or occupant against Owner, Engineer, or any other party indemnified hereunder to the extent caused by or based upon Contractor's performance of the Work.

B. *Removal of* Debris *During Performance of the Work:* During the progress of the Work Contractor shall keep the Site and other areas free from accumulations of waste materials, rubbish, and other debris. Removal and disposal of such waste materials, rubbish, and other debris shall conform to applicable Laws and Regulations.

C. *Cleaning:* Prior to Substantial Completion of the Work Contractor shall clean the Site and the Work and make it ready for utilization by Owner. At the completion of the Work Contractor shall remove from the Site all tools, appliances, construction equipment and machinery, and surplus materials and shall restore to original condition all property not designated for alteration by the Contract Documents.

D. *Loading Structures:* Contractor shall not load nor permit any part of any structure to be loaded in any manner that will endanger the structure, nor shall Contractor subject any part of the Work or adjacent property to stresses or pressures that will endanger it.

6.12 *Record Documents*

A. Contractor shall *maintain* in a safe place at the Site one record copy of all Drawings, Specifications, Addenda, Change Orders, Work Change Directives, Field Orders, and written interpretations and clarifications in good order and annotated to show changes made during construction. These record documents together with all approved Samples and a counterpart of all approved Shop Drawings will be available to Engineer for reference. Upon completion of the Work, these record documents, Samples, and Shop Drawings will be delivered to Engineer for Owner.

6.13 *Safety and Protection*

A. Contractor shall be solely responsible for initiating, maintaining and supervising all safety precautions and programs in connection with the Work. Such responsibility does not relieve Subcontractors of their responsibility for the safety of persons or property in the performance of their work, nor for compliance with applicable safety Laws and Regulations. Contractor shall take all necessary precautions for the safety of, and shall provide the necessary protection to prevent damage, injury or loss to:

1. all persons on the Site or who may be affected by the Work;

2. all the Work and materials and equipment to be incorporated therein, whether in storage on or off the Site; and

3. other property at the Site or adjacent thereto, including trees, shrubs, lawns, walks, pavements, roadways, structures, utilities, and Underground Facilities not designated for removal, relocation, or replacement in the course of construction.

B. Contractor shall comply with all applicable Laws and Regulations relating to the safety of persons or property, or to the protection of persons or property from damage, injury, or loss; and shall erect and maintain all necessary safeguards for such safety and protection. Contractor shall notify owners of adjacent property and of Underground Facilities and other utility owners when prosecution of the Work may affect them, and shall cooperate with them in the protection, removal, relocation, and replacement of their property.

C. Contractor shall comply with the applicable requirements of Owner's safety programs, if any. The Supplementary Conditions identify any Owner's safety programs that are applicable to the Work.

D. Contractor shall inform Owner and Engineer of the specific requirements of Contractor's safety program with which Owner's and Engineer's employees and representatives must comply while at the Site.

E. All damage, injury, or loss to any property referred to in Paragraph 6.13.A.2 or 6.13.A.3 caused, directly or indirectly, in whole or in part, by Contractor, any Subcontractor, Supplier, or any other individual or entity directly or indirectly employed by any of them to perform any of the Work, or anyone for whose acts any of them may be liable, shall be remedied by Contractor (except damage or loss attributable to the fault of Drawings or Specifications or to the acts or omissions of Owner or Engineer or anyone employed by any of them, or anyone for whose acts any of them may be liable, and not attributable, directly or indirectly, in whole or in part, to the fault or negligence of Contractor or any Subcontractor, Supplier, or other individual or entity directly or indirectly employed by any of them).

F. Contractor's duties and responsibilities for safety and for protection of the Work shall continue until such time as all the Work is completed and Engineer has issued a notice to Owner and Contractor in accordance with Paragraph 14.7.B that the Work is acceptable (except as otherwise expressly provided in connection with Substantial Completion).

6.14 *Safety Representative*

A. Contractor shall designate a qualified and experienced safety representative at the Site whose duties and responsibilities shall be the prevention of accidents and the maintaining and supervising of safety precautions and programs.

6.15 *Hazard Communication Programs*

A. Contractor shall be responsible for coordinating any exchange of material safety data sheets or other hazard communication information required to be made available to or exchanged between or among employers at the Site in accordance with Laws or Regulations.

6.16 *Emergencies*

A. In emergencies affecting the safety or protection of persons or the Work or property at the Site or adjacent thereto, Contractor is obligated to act to prevent threatened damage, injury, or loss. Contractor shall give Engineer prompt written notice if Contractor believes that any significant changes in the Work or variations from the Contract Documents have been caused thereby or are required as a result thereof. If Engineer determines that a change in the Contract Documents is required because of the action taken by Contractor in response to such an emergency, a Work Change Directive or Change Order will be issued.

6.17 *Shop Drawings and Samples*

A. Contractor shall submit Shop Drawings and Samples to Engineer for review and approval

in accordance with the accepted Schedule of Submittals (as required by Paragraph 2.7). Each submittal will be identified as Engineer may require.

1. *Shop Drawings:*

    a. Submit number of copies specified in the General Requirements.

    b. Data shown on the Shop Drawings will be complete with respect to quantities, dimensions, specified performance and design criteria, materials, and similar data to show Engineer the services, materials, and equipment Contractor proposes to provide and to enable Engineer to review the information for the limited purposes required by Paragraph 6.17.D.

2. *Samples:*

    a. Submit number of Samples specified in the Specifications.

    b. Clearly identify each Sample as to material, Supplier, pertinent data such as catalog numbers, the use for which intended and other data as Engineer may require to enable Engineer to review the submittal for the limited purposes required by Paragraph 6.17.D.

B. Where a Shop Drawing or Sample is required by the Contract Documents or the Schedule of Submittals, any related Work performed prior to Engineer's review and approval of the pertinent submittal will be at the sole expense and responsibility of Contractor.

C. *Submittal Procedures:*

1. Before submitting each Shop Drawing or Sample, Contractor shall have:

    a. reviewed and coordinated each Shop Drawing or Sample with other Shop Drawings and Samples and with the requirements of the Work and the Contract Documents.

    b. determined and verified all field measurements, quantities, dimensions, specified performance and design criteria, installation requirements, materials, catalog numbers, and similar information with respect thereto;

    c. determined and verified the suitability of all materials offered with respect to the indicated application, fabrication, shipping, handling, storage, assembly, and installation pertaining to the performance of the Work; and

    d. determined and verified all information relative to Contractor's responsibilities for means, methods, techniques, sequences, and procedures of construction, and safety precautions and programs incident thereto.

2. Each submittal shall bear a stamp or specific written certification that Contractor has satisfied Contractor's obligations under the Contract Documents with respect to Contractor's review and approval of that submittal.

3. With each submittal, Contractor shall give Engineer specific written notice of any variations that the Shop Drawing or Sample may have from the requirements of the Contract Documents. This notice shall be both a written communication separate from the Shop Drawings or Sample submittal; and, in addition, by a specific notation made on each Shop Drawing or Sample submitted to Engineer for review and approval of each such variation.

D. *Engineer's Review*

1. Engineer will provide timely review of Shop Drawings and Samples in accordance with the Schedule of Submittals acceptable to Engineer. Engineer's review and approval will be only to determine if the items covered by the submittals will, after installation or incorporation in the Work, conform to the information given in the Contract Documents and be compatible with the design concept of the completed Project as a functioning whole as indicated by the Contract Documents.

2. Engineer's review and approval will not extend to means, methods, techniques, sequences, or procedures of construction (except where a particular means, method, technique, sequence, or procedure of construction is specifically and expressly called for by the Contract Documents) or to safety precautions or programs incident thereto. The review and approval of a separate item as such will not indicate approval of the assembly in which the item functions.

3. Engineer's review and approval shall not relieve Contractor from responsibility for any variation from the requirements of the Contract Documents unless Contractor has complied with the requirements of Paragraph 6.17.C.3 and Engineer has given written approval of each such variation by specific written notation thereof incorporated in or accompanying the Shop Drawing or Sample. Engineer's review and approval shall not relieve Contractor from responsibility for complying with the requirements of Paragraph 6.17.C.1.

E. *Resubmittal Procedures:*

1. Contractor shall make corrections required by Engineer and shall return the required number of corrected copies of Shop Drawings and submit, as required, new Samples for review and approval. Contractor shall direct specific attention in writing to revisions other than the corrections called for by Engineer on previous submittals.

6.18 *Continuing the Work*

A. Contractor shall carry on the Work and adhere to the Progress Schedule during all disputes or disagreements with Owner. No Work shall be delayed or postponed pending resolution of any disputes or disagreements, except as permitted by Paragraph 15.04 or as Owner and Contractor may otherwise agree in writing.

6.19 *Contractor's General Warranty and Guarantee*

A. Contractor warrants and guarantees to Owner that all Work will be in accordance with the Contract Documents and will not be defective. Engineer and its officers, directors, members, partners, employees, agents, consultants, and subcontractors shall be entitled to rely on representation of Contractor's warranty and guarantee.

B. Contractor's warranty and guarantee hereunder excludes defects or damage caused by:

1. abuse, modification, or improper maintenance or operation by persons other than Contractor, Subcontractors, Suppliers, or any other individual or entity for whom Contractor is responsible; or

2. normal wear and tear under normal usage.

C. Contractor's obligation to perform and complete the Work in accordance with the Contract Documents shall be absolute. None of the following will constitute an acceptance of Work that is not in accordance with the Contract Documents or a release of Contractor's obligation to perform the Work in accordance with the Contract Documents:

1. observations by Engineer;

2. recommendation by Engineer or payment by Owner of any progress or final payment;

3. the issuance of a certificate of Substantial Completion by Engineer or any payment related thereto by Owner;

4. use or occupancy of the Work or any part thereof by Owner;

5. any review and approval of a Shop Drawing or Sample submittal or the issuance of a notice of acceptability by Engineer;

6. any inspection, test, or approval by others; or

7. any correction of defective Work by Owner.

6.20 *Indemnification*

A. To the fullest extent permitted by Laws and Regulations, Contractor shall indemnify and hold harmless Owner and Engineer, and the officers, directors, members, partners,

employees, agents, consultants and subcontractors of each and any of them from and against all claims, costs, losses, and damages (including but not limited to all fees and charges of engineers, architects, attorneys, and other professionals and all court or arbitration or other dispute resolution costs) arising out of or relating to the performance of the Work, provided that any such claim, cost, loss, or damage is attributable to bodily injury, sickness, disease, or death, or to injury to or destruction of tangible property (other than the Work itself), including the loss of use resulting therefrom but only to the extent caused by any negligent act or omission of Contractor, any Subcontractor, any Supplier, or any individual or entity directly or indirectly employed by any of them to perform any of the Work or anyone for whose acts any of them may be liable.

In any and all claims against Owner or Engineer or any of their officers, directors, members, partners, employees, agents, consultants, or subcontractors by any employee (or the survivor or personal representative of such employee) of Contractor, any Subcontractor, any Supplier, or any individual or entity directly or indirectly employed by any of them to perform any of the Work, or anyone for whose acts any of them may be liable, the indemnification obligation under Paragraph 6.20.A shall not be limited in any way by any limitation on the amount or type of damages, compensation, or benefits payable by or for Contractor or any such Subcontractor, Supplier, or other individual or entity under workers' compensation acts, disability benefit acts, or other employee benefit acts.

B. The indemnification obligations of Contractor under Paragraph 6.20.A shall not extend to the liability of Engineer and Engineer's officers, directors, members, partners, employees, agents, consultants and subcontractors arising out of:

1. the preparation or approval of, or the failure to prepare or approve maps, Drawings, opinions, reports, surveys, Change Orders, designs, or Specifications; or

2. giving directions or instructions, or failing to give them, if that is the primary cause of the injury or damage.

6.21 *Delegation of Professional Design Services*

A. Contractor will not be required to provide professional design services unless such services are specifically required by the Contract Documents for a portion of the Work or unless such services are required to carry out Contractor's responsibilities for construction means, methods, techniques, sequences and procedures. Contractor shall not be required to provide professional services in violation of applicable law.

B. If professional design services or certifications by a design professional related to systems, materials or equipment are specifically required of Contractor by the Contract Documents, Owner and Engineer will specify all performance and design criteria that such services must satisfy. Contractor shall cause such services or certifications to be provided by a properly licensed professional, whose signature and seal shall appear on all drawings, calculations, specifications, certifications, Shop Drawings and other submittals prepared

by such professional. Shop Drawings and other submittals related to the Work designed or certified by such professional, if prepared by others, shall bear such professional's written approval when submitted to Engineer.

C. Owner and Engineer shall be entitled to rely upon the adequacy, accuracy and completeness of the services, certifications or approvals performed by such design professionals, provided Owner and Engineer have specified to Contractor all performance and design criteria that such services must satisfy.

D. Pursuant to this Paragraph 6.21, Engineer's review and approval of design calculations and design drawings will be only for the limited purpose of checking for conformance with performance and design criteria given and the design concept expressed in the Contract Documents. Engineer's review and approval of Shop Drawings and other submittals (except design calculations and design drawings) will be only for the purpose stated in Paragraph 6.17.D.1.

E. Contractor shall not be responsible for the adequacy of the performance or design criteria required by the Contract Documents.

PART 2 - ARTICLE 7: OTHER WORK AT THE SITE

7.1 *Related Work at Site*

A. Owner may perform other work related to the Project at the Site with Owner's employees, or through other direct contracts therefor, or have other work performed by utility owners. If such other work is not noted in the Contract Documents, then:

1. written notice thereof will be given to Contractor prior to starting any such other work; and

2. if Owner and Contractor are unable to agree on entitlement to or on the amount or extent, if any, of any adjustment in the Contract Price or Contract Times that should be allowed as a result of such other work, a Claim may be made therefor as provided in Paragraph 10.5.

B. Contractor shall afford each other contractor who is a party to such a direct contract, each utility owner, and Owner, if Owner is performing other work with Owner's employees, proper and safe access to the Site, provide a reasonable opportunity for the introduction and storage of materials and equipment and the execution of such other work, and properly coordinate the Work with theirs. Contractor shall do all cutting, fitting, and patching of the Work that may be required to properly connect or otherwise make its several parts come together and properly integrate with such other work. Contractor shall not endanger any work of others by cutting, excavating, or otherwise altering such work; provided, however, that Contractor may cut or alter others' work with the written consent of Engineer and the others whose work will be affected. The duties and responsibilities of Contractor under this Paragraph are for the benefit of such utility owners and other contractors to the extent that there are comparable provisions for the benefit of Contractor in said direct contracts between Owner and such utility owners and other contractors.

C. If the proper execution or results of any part of Contractor's Work depends upon work performed by others under this Article 7, Contractor shall inspect such other work and promptly report to Engineer in writing any delays, defects, or deficiencies in such other work that render it unavailable or unsuitable for the proper execution and results of Contractor's Work. Contractor's failure to so report will constitute an acceptance of such other work as fit and proper for integration with Contractor's Work except for latent defects and deficiencies in such other work.

7.2 *Coordination*

A. If Owner intends to contract with others for the performance of other work on the Project at the Site, the following will be set forth in Supplementary Conditions:

1. the individual or entity who will have authority and responsibility for coordination

of the activities among the various contractors will be identified;

2. the specific matters to be covered by such authority and responsibility will be itemized; and

3. the extent of such authority and responsibilities will be provided.

B. Unless otherwise provided in the Supplementary Conditions, Owner shall have sole authority and responsibility for such coordination.

7.3 *Legal Relationships*

A. Paragraphs 7.1.A and 7.2 are not applicable for utilities not under the control of Owner.

B. Each other direct contract of Owner under Paragraph 7.1.A shall provide that the other contractor is liable to Owner and Contractor for the reasonable direct delay and disruption costs incurred by Contractor as a result of the other contractor's wrongful actions or inactions.

C. Contractor shall be liable to Owner and any other contractor under direct contract to Owner for the reasonable direct delay and disruption costs incurred by such other contractor as a result of Contractor's wrongful action or inactions.

PART 2 - ARTICLE 8: OWNER'S RESPONSIBILITIES

8.1 *Communications to Contractor*

A. Except as otherwise provided in these General Conditions, Owner shall issue all communications to Contractor through Engineer.

8.2 *Replacement of Engineer*

A. In case of termination of the employment of Engineer, Owner shall appoint an engineer to whom Contractor makes no reasonable objection, whose status under the Contract Documents shall be that of the former Engineer.

8.3 *Furnish Data*

A. Owner shall promptly furnish the data required of Owner under the Contract Documents.

8.4 *Pay When Due*

A. Owner shall make payments to Contractor when they are due as provided in Paragraphs 14.2.C and 14.7.C.

8.5 *Lands and Easements; Reports and Tests*

A. Owner's duties with respect to providing lands and easements and providing engineering surveys to establish reference points are set forth in Paragraphs 4.1 and 4.5. Paragraph 4.2 refers to Owner's identifying and making available to Contractor copies of reports of explorations and tests of subsurface conditions and drawings of physical conditions relating to existing surface or subsurface structures at the Site.

8.6 *Insurance*

A. Owner's responsibilities, if any, with respect to purchasing and maintaining liability and property insurance are set forth in Article 5.

8.7 *Change Orders*

A. Owner is obligated to execute Change Orders as indicated in Paragraph 10.3.

8.8 *Inspections, Tests, and Approvals*

A. Owner's responsibility with respect to certain inspections, tests, and approvals is set forth in Paragraph 13.3.B.

8.9 *Limitations on Owner's Responsibilities*

A. The Owner shall not supervise, direct, or have control or authority over, nor be responsible for, Contractor's means, methods, techniques, sequences, or procedures of construction, or the safety precautions and programs incident thereto, or for any failure of Contractor to comply with Laws and Regulations applicable to the performance of the Work. Owner will not be responsible for Contractor's failure to perform the Work in accordance with the Contract Documents.

8.10 *Undisclosed Hazardous Environmental Condition*

A. Owner's responsibility in respect to an undisclosed Hazardous Environmental Condition is set forth in Paragraph 4.6.

8.11 *Evidence of Financial Arrangements*

A. Upon request of Contractor, Owner shall furnish Contractor reasonable evidence that financial arrangements have been made to satisfy Owner's obligations under the Contract Documents.

8.12 *Compliance with Safety Program*

A. While at the Site, Owner's employees and representatives shall comply with the specific applicable requirements of Contractor's safety programs of which Owner has been informed pursuant to Paragraph 6.13.D.

PART 2 - ARTICLE 9: ENGINEER'S STATUS DURING CONSTRUCTION

9.1 *Owner's Representative*

A. Engineer will be Owner's representative during the construction period. The duties and responsibilities and the limitations of authority of Engineer as Owner's representative during construction are set forth in the Contract Documents.

9.2 *Visits to Site*

A. Engineer will make visits to the Site at intervals appropriate to the various stages of construction as Engineer deems necessary in order to observe as an experienced and qualified design professional the progress that has been made and the quality of the various aspects of Contractor's executed Work. Based on information obtained during such visits and observations, Engineer, for the benefit of Owner, will determine, in general, if the Work is proceeding in accordance with the Contract Documents. Engineer will not be required to make exhaustive or continuous inspections on the Site to checkthe quality or quantity of the Work. Engineer's efforts will be directed toward providing for Owner a greater degree of confidence that the completed Work will conform generally to the Contract Documents. On the basis of such visits and observations, Engineer will keep Owner informed of the progress of the Work and will endeavor to guard Owner against defective Work.

B. Engineer's visits and observations are subject to all the limitations on Engineer's authority and responsibility set forth in Paragraph 9.9. Particularly, but without limitation, during or as a result of Engineer's visits or observations of Contractor's Work, Engineer will not supervise, direct, control, or have authority over or be responsible for Contractor's means, methods, techniques, sequences, or procedures of construction, or the safety precautions and programs incident thereto, or for any failure of Contractor to comply with Laws and Regulations applicable to the performance of the Work.

9.3 *Project Representative*

A. If Owner and Engineer agree, Engineer will furnish a Resident Project Representative to assist Engineer in providing more extensive observation of the Work. The authority and responsibilities of any such Resident Project Representative and assistants will be as provided in the Supplementary Conditions, and limitations on the responsibilities thereof will be as provided in Paragraph 9.9. If Owner designates another representative or agent to represent Owner at the Site who is not Engineer's consultant, agent or employee, the responsibilities and authority and limitations thereon of such other individual or entity will be as provided in the Supplementary Conditions.

B. The Resident Project Representative (RPR) will be Owner's employee or agent at the Site, will act as directed by and under the supervision of Engineer, and will confer with

Engineer regarding RPR's actions. RPR's dealings in matters pertaining to the Work in general shall be with Engineer and Contractor. RPR's dealings with Subcontractors shall be through or with the full knowledge and approval of Contractor. The RPR shall:

1. *Schedules:* Review the progress schedule, schedule of Shop Drawing and Sample submittals, and schedule of values prepared by Contractor and consult with Engineer concerning acceptability.

2. *Conferences and Meetings:* Attend meetings with Contractor, such as preconstruction conferences, progress meetings, job conferences and other project-related meetings, and prepare and circulate copies of minutes thereof.

3. *Liaison:*

    a. Serve as Engineer's liaison with Contractor, working principally through Contractor's authorized representative, assist in providing information regarding the intent of the Contract Documents.

    b. Assist Engineer in serving as liaison with Contractor when Contractor's operations affect Owner's on-site operations.

    c. Assist in obtaining from Owner additional details or information, when required for proper execution of the Work.

4. *Interpretation of Contract Documents:* Report to Engineer when clarifications and interpretations of the Contract Documents are needed and transmit to Contractor clarifications and interpretations as issued by Engineer.

5. *Shop Drawings and Samples:*

    a. Record date of receipt of Samples and approved Shop Drawings.

    b. Receive Samples which are furnished at the Site by Contractor, and notify Engineer of availability of Samples for examination.

6. *Modifications:* Consider and evaluate Contractor's suggestions for modifications in Drawings or Specifications and report such suggestions, together with RPR's recommendations, to Engineer. Transmit to Contractor in writing decisions as issued by Engineer.

7. *Review of Work and Rejection of Defective Work:*

    a. Conduct onsite observations of Contractor's work in progress to assist Engineer in determining if the Work is in general proceeding in accordance with the

Contract Documents.

b. Report to Engineer whenever RPR believes that any part of Contractor's work in progress will not produce a completed Project that conforms generally to the Contract Documents or will imperil the integrity of the design concept of the completed Project as a functioning whole as indicated in the Contract Documents, or has been damaged, or does not meet the requirements of any inspection, test or approval required to be made; and advise Engineer of that part of work in progress that RPR believes should be corrected or rejected or should be uncovered for observation, or requires special testing, inspection or approval.

8. *Inspections, Tests, and System Startups:*

a. Verify that tests, equipment, and systems start-ups and operating and maintenance training are conducted in the presence of appropriate Owner's personnel, and that Contractor maintains adequate records thereof.

b. Observe, record, and report to Engineer appropriate details relative to the test procedures and systems start-ups.

9. *Records:*

a. Record names, addresses, fax numbers, e-mail addresses, web site locations, and telephone numbers of all Contractors, Subcontractors, and major Suppliers of materials and equipment.

b. Maintain records for use in preparing Project documentation.

10. *Reports:*

a. Furnish to Engineer periodic reports as required of progress of the Work and of Contractor's compliance with the progress schedule and schedule of Shop Drawing and Sample submittals.

b. Draft and recommend to Engineer proposed Change Orders, Work Change Directives, and Field Orders. Obtain backup material from Contractor.

c. Immediately notify Engineer of the occurrence of any Site accidents, emergencies, acts of God endangering the Work, damage to property by fire or other causes, or the discovery of any Hazardous Environmental Condition.

11. *Payment Requests*: Review Applications for Payment with Contractor for compliance with the established procedure for their submission and forward with recommendations to Engineer, noting particularly the relationship of the payment

requested to the schedule of values, Work completed, and materials and equipment delivered at the Site but not incorporated in the Work.

12. *Certificates, Operation and Maintenance Manuals:* During the course of the Work, verify that materials and equipment certificates, operation and maintenance manuals and other data required by the Specifications to be assembled and furnished by Contractor are applicable to the items actually installed and in accordance with the Contract Documents, and have these documents delivered to Engineer for review and forwarding to Owner prior to payment for that part of the Work.

13. *Completion:*

    a. Participate in a Substantial Completion inspection, assist in the determination of Substantial Completion and the preparation of lists of items to be completed or corrected.

    b. Participate in a final inspection in the company of Engineer, Owner, and Contractor and prepare a final list of items to be completed and deficiencies to be remedied.

    c. Observe whether all items on the final list have been completed or corrected and make recommendations to Engineer concerning acceptance and issuance of the Notice of Acceptability of the Work.

C. The RPR shall not:

1. Authorize any deviation from the Contract Documents or substitution of materials or equipment (including "or-equal" items).

2. Exceed limitations of Engineer's authority as set forth in the Contract Documents.

3. Undertake any of the responsibilities of Contractor, Subcontractors, Suppliers, or Contractor's superintendent.

4. Advise on, issue directions relative to, or assume control over any aspect of the means, methods, techniques, sequences or procedures of Contractor's work unless such advice or directions are specifically required by the Contract Documents.

5. Advise on, issue directions regarding, or assume control over safety practices, precautions, and programs in connection with the activities or operations of Owner or Contractor.

6. Participate in specialized field or laboratory tests or inspections conducted off-site by others except as specifically authorized by Engineer.

7. Accept Shop Drawing or Sample submittals from anyone other than Contractor.

8. Authorize Owner to occupy the Project in whole or in part.

9.4 *Authorized Variations in Work*

A. Engineer may authorize minor variations in the Work from the requirements of the Contract Documents which do not involve an adjustment in the Contract Price or the Contract Times and are compatible with the design concept of the completed Project as a functioning whole as indicated by the Contract Documents. These may be accomplished by a Field Order and will be binding on Owner and also on Contractor, who shall perform the Work involved promptly. If Owner or Contractor believes that a

Field Order justifies an adjustment in the Contract Price or Contract Times, or both, and the parties are unable to agree on entitlement to or on the amount or extent, if any, of any such adjustment, a Claim may be made therefor as provided in Paragraph 10.5.

9.5 *Rejecting Defective Work*

A. Engineer will have authority to reject Work which Engineer believes to be defective, or that Engineer believes will not produce a completed Project that conforms to the Contract Documents or that will prejudice the integrity of the design concept of the completed Project as a functioning whole as indicated by the Contract Documents. Engineer will also have authority to require special inspection or testing of the Work as provided in Paragraph 13.4, whether or not the Work is fabricated, installed, or completed.

9.6 *Shop Drawings, Change Orders and Payments*

A. In connection with Engineer's authority, and limitations thereof, as to Shop Drawings and Samples, see Paragraph 6.17.

B. In connection with Engineer's authority, and limitations thereof, as to design calculations and design drawings submitted in response to a delegation of professional design services, if any, see Paragraph 6.21.

C. In connection with Engineer's authority as to Change Orders, see Articles 10, 11, and 12.

D. In connection with Engineer's authority as to Applications for Payment, see Article 14.

9.7 *Determinations for Unit Price Work*

A. Engineer will determine the actual quantities and classifications of Unit Price Work performed by Contractor. Engineer will review with Contractor the Engineer's preliminary determinations on such matters before rendering a written decision thereon (by recommendation of an Application for Payment or otherwise). Engineer's written decision thereon will be final and binding (except as modified by Engineer to reflect changed factual

conditions or more accurate data) upon Owner and Contractor, subject to the provisions of Paragraph 10.5.

9.8 *Decisions on Requirements of Contract Documents and Acceptability of Work*

A. Engineer will be the initial interpreter of the requirements of the Contract Documents and judge of the acceptability of the Work thereunder. All matters in question and other matters between Owner and Contractor arising prior to the date final payment is due relating to the acceptability of the Work, and the interpretation of the requirements of the Contract Documents pertaining to the performance of the Work, will be referred initially to Engineer in writing within 30 days of the event giving rise to the question.

   Engineer will, with reasonable promptness, render a written decision on the issue referred. If Owner or Contractor believes that any such decision entitles them to an adjustment in the Contract Price or Contract Times or both, a Claim may be made under Paragraph 10.05. The date of Engineer's decision shall be the date of the event giving rise to the issues referenced for the purposes of Paragraph 10.5.B.

B. Engineer's written decision on the issue referred will be final and binding on Owner and Contractor, subject to the provisions of Paragraph 10.5.

C. When functioning as interpreter and judge under this Paragraph 9.8, Engineer will not show partiality to Owner or Contractor and will not be liable in connection with any interpretation or decision rendered in good faith in such capacity.

9.9 *Limitations on Engineer's Authority and Responsibilities*

A. Neither Engineer's authority or responsibility under this Article 9 or under any other provision of the Contract Documents nor any decision made by Engineer in good faith either to exercise or not exercise such authority or responsibility or the undertaking, exercise, or performance of any authority or responsibility by Engineer shall create, impose, or give rise to any duty in contract, tort, or otherwise owed by Engineer to Contractor, any Subcontractor, any Supplier, any other individual or entity, or to any surety for or employee or agent of any of them.

B. Engineer will not supervise, direct, control, or have authority over or be responsible for Contractor's means, methods, techniques, sequences, or procedures of construction, or the safety precautions and programs incident thereto, or for any failure of Contractor to comply with Laws and Regulations applicable to the performance of the Work. Engineer will not be responsible for Contractor's failure to perform the Work in accordance with the Contract Documents.

C. Engineer will not be responsible for the acts or omissions of Contractor or of any Subcontractor, any Supplier, or of any other individual or entity performing any of the Work.

D. Engineer's review of the final Application for Payment and accompanying documentation and all maintenance and operating instructions, schedules, guarantees, bonds, certificates of inspection, tests and approvals, and other documentation required to be delivered by Paragraph 14.7.A will only be to determine generally that their content complies with the requirements of, and in the case of certificates of inspections, tests, and approvals that the results certified indicate compliance with, the Contract Documents.

E. The limitations upon authority and responsibility set forth in this Paragraph 9.9 shall also apply to the Resident Project Representative, if any, and assistants, if any.

9.10 *Compliance with Safety Program*

A. While at the Site, Engineer's employees and representatives shall comply with the specific applicable requirements of Contractor's safety programs of which Engineer has been informed pursuant to Paragraph 6.13.D.

PART 2 - ARTICLE 10: CHANGES IN THE WORK; CLAIMS

10.1 *Authorized Changes in the Work*

A. Without invalidating the Contract and without notice to any surety, Owner may, at any time or from time to time, order additions, deletions, or revisions in the Work by a Change Order, or a Work Change Directive. Upon receipt of any such document, Contractor shall promptly proceed with the Work involved which will be performed under the applicable conditions of the Contract Documents (except as otherwise specifically provided).

B. If Owner and Contractor are unable to agree on entitlement to, or on the amount or extent, if any, of an adjustment in the Contract Price or Contract Times, or both, that should be allowed as a result of a Work Change Directive, a Claim may be made therefor as provided in Paragraph 10.5.

10.2 *Unauthorized Changes in the Work*

A. Contractor shall not be entitled to an increase in the Contract Price or an extension of the Contract Times with respect to any work performed that is not required by the Contract Documents as amended, modified, or supplemented as provided in Paragraph 3.4, except in the case of an emergency as provided in Paragraph 6.16 or in the case of uncovering Work as provided in Paragraph 13.4.D.

10.3 *Execution of Change Orders*

A. Owner and Contractor shall execute appropriate Change Orders recommended by Engineer covering:

1. changes in the Work which are: (i) ordered by Owner pursuant to Paragraph 10.1.A, (ii) required because of acceptance of defective Work under Paragraph 13.8.A or Owner's correction of defective Work under Paragraph 13.9, or (iii) agreed to by the parties;

2. changes in the Contract Price or Contract Times which are agreed to by the parties, including any undisputed sum or amount of time for Work actually performed in accordance with a Work Change Directive; and

3. changes in the Contract Price or Contract Times which embody the substance of any written decision rendered by Engineer pursuant to Paragraph 10.5; provided that, in lieu of executing any such Change Order, an appeal may be taken from any such decision in accordance with the provisions of the Contract Documents and applicable Laws and Regulations, but during any such appeal, Contractor shall carry on the Work and adhere to the Progress Schedule as provided in Paragraph 6.18.A.

10.4 *Notification to Surety*

A. If the provisions of any bond require notice to be given to a surety of any change affecting the general scope of the Work or the provisions of the Contract Documents (including, but not limited to, Contract Price or Contract Times), the giving of any such

notice will be Contractor's responsibility. The amount of each applicable bond will be adjusted to reflect the effect of any such change.

10.5 *Claims*

A. *Engineer's Decision Required*: All Claims, except those waived pursuant to Paragraph 14.9, shall be referred to the Engineer for decision. A decision by Engineer shall be required as a condition precedent to any exercise by Owner or Contractor of any rights or remedies either may otherwise have under the Contract Documents or by Laws and Regulations in respect of such Claims.

B. *Notice:* Written notice stating the general nature of each Claim shall be delivered by the claimant to Engineer and the other party to the Contract promptly (but in no event later than 30 days) after the start of the event giving rise thereto. The responsibility to substantiate a Claim shall rest with the party making the Claim. Notice of the amount or extent of the Claim, with supporting data shall be delivered to the Engineer and the other party to the Contract within 60 days after the start of such event (unless Engineer allows additional time for claimant to submit additional or more accurate data in support of such Claim). A Claim for an adjustment in Contract Price shall be prepared in accordance with the provisions of Paragraph 12.1.B. A Claim for an adjustment in Contract Times shall be prepared in accordance with the provisions of Paragraph
12.2.B. Each Claim shall be accompanied by claimant's written statement that the adjustment claimed is the entire adjustment to which the claimant believes it is entitled as a result of said event. The opposing party shall submit any response to Engineer and the claimant within 30 days after receipt of the claimant's last submittal (unless Engineer allows additional time).

C. *Engineer's Action*: Engineer will review each Claim and, within 30 days after receipt of the last submittal of the claimant or the last submittal of the opposing party, if any, take one of the following actions in writing:

1. deny the Claim in whole or in part;

2. approve the Claim; or

3. notify the parties that the Engineer is unable to resolve the Claim if, in the Engineer's sole discretion, it would be inappropriate for the Engineer to do so. For purposes of further resolution of the Claim, such notice shall be deemed a denial.

D. In the event that Engineer does not take action on a Claim within said 30 days, the Claim shall be deemed denied.

E. Engineer's written action under Paragraph 10.5.C or denial pursuant to Paragraphs 10.5.C.3 or 10.5.D will be final and binding upon Owner and Contractor, unless Owner or Contractor invoke the dispute resolution procedure set forth in Article 16 within 30 days of such action or denial.

F. No Claim for an adjustment in Contract Price or Contract Times will be valid if not submitted in accordance with this Paragraph 10.5.

PART 2 - ARTICLE 11: COST OF THE WORK; ALLOWANCES; UNIT PRICE WORK

11.1 *Cost of the Work*

A. *Costs Included:* The term Cost of the Work means the sum of all costs, except those excluded in Paragraph 11.1.B, necessarily incurred and paid by Contractor in the proper performance of the Work. When the value of any Work covered by a Change Order or when a Claim for an adjustment in Contract Price is determined on the basis of Cost of the Work, the costs to be reimbursed to Contractor will be only those additional or incremental costs required because of the change in the Work or because of the event giving rise to the Claim. Except as otherwise may be agreed to in writing by Owner, such costs shall be in amounts no higher than those prevailing in the locality of the Project, shall not include any of the costs itemized in Paragraph 11.1.B, and shall include only the following items:

1. Payroll costs for employees in the direct employ of Contractor in the performance of the Work under schedules of job classifications agreed upon by Owner and Contractor. Such employees shall include, without limitation, superintendents, foremen, and other personnel employed full time on the Work. Payroll costs for employees not employed full time on the Work shall be apportioned on the basis of their time spent on the Work. Payroll costs shall include, but not be limited to, salaries and wages plus the cost of fringe benefits, which shall include social security contributions, unemployment, excise, and payroll taxes, workers' compensation, health and retirement benefits, bonuses, sick leave, vacation and holiday pay applicable thereto. The expenses of performing Work outside of regular working hours, on Saturday, Sunday, or legal holidays, shall be included in the above to the extent authorized by Owner.

2. Cost of all materials and equipment furnished and incorporated in the Work, including costs of transportation and storage thereof, and Suppliers' field services required in connection therewith. All cash discounts shall accrue to Contractor unless Owner deposits funds with Contractor with which to make payments, in which case the cash discounts shall accrue to Owner. All trade discounts, rebates and refunds and returns from sale of surplus materials and equipment shall accrue to Owner, and Contractor shall make provisions so that they may be obtained.

3. Payments made by Contractor to Subcontractors for Work performed by Subcontractors. If required by Owner, Contractor shall obtain competitive bids from subcontractors acceptable to Owner and Contractor and shall deliver such bids to Owner, who will then determine, with the advice of Engineer, which bids, if any, will be acceptable. If any subcontract provides that the Subcontractor is to be paid on the basis of Cost of the Work plus a fee, the Subcontractor's Cost of the Work and fee shall be determined in the same manner as Contractor's Cost of the Work and fee as provided in this Paragraph 11.01.

4. Costs of special consultants (including but not limited to engineers, architects, testing laboratories, surveyors, attorneys, and accountants) employed for services specifically related to the Work.

5. Supplemental costs including the following:

   a. The proportion of necessary transportation, travel, and subsistence expenses of Contractor's employees incurred in discharge of duties connected with the Work.

   b. Cost, including transportation and maintenance, of all materials, supplies, equipment, machinery, appliances, office, and temporary facilities at the Site, and hand tools not owned by the workers, which are consumed in the performance of the Work, and cost, less market value, of such items used but not consumed which remain the property of Contractor.

   c. Rentals of all construction equipment and machinery, and the parts thereof whether rented from Contractor or others in accordance with rental agreements approved by Owner with the advice of Engineer, and the costs of transportation, loading, unloading, assembly, dismantling, and removal thereof. All such costs shall be in accordance with the terms of said rental agreements. The rental of any such equipment, machinery, or parts shall cease when the use thereof is no longer necessary for the Work.

   d. Sales, consumer, use, and other similar taxes related to the Work, and for which Contractor is liable, as imposed by Laws and Regulations.

   e. Deposits lost for causes other than negligence of Contractor, any Subcontractor, or anyone directly or indirectly employed by any of them or for whose acts any of them may be liable, and royalty payments and fees for permits and licenses.

   f. Losses and damages (and related expenses) caused by damage to the Work, not compensated by insurance or otherwise, sustained by Contractor in connection with the performance of the Work (except losses and damages within the deductible amounts of property insurance established in accordance with Paragraph 5.6.D), provided such losses and damages have resulted from causes other than the negligence of Contractor, any Subcontractor, or anyone directly or indirectly employed by any of them or for whose acts any of them may be liable. Such losses shall include settlements made with the written consent and approval of Owner. No such losses, damages, and expenses shall be included in the Cost of the Work for the purpose of determining Contractor's fee.

   g. The cost of utilities, fuel, and sanitary facilities at the Site.

   h. Minor expenses such as telegrams, long distance telephone calls, telephone service at the Site, express and courier services, and similar petty cash items in connection with the Work.

i. The costs of premiums for all bonds and insurance Contractor is required by the Contract Documents to purchase and maintain.

B. *Costs Excluded:* The term Cost of the Work shall not include any of the following items:

1. Payroll costs and other compensation of Contractor's officers, executives, principals (of partnerships and sole proprietorships), general managers, safety managers, engineers, architects, estimators, attorneys, auditors, accountants, purchasing and contracting agents, expediters, timekeepers, clerks, and other personnel employed by Contractor, whether at the Site or in Contractor's principal or branch office for general administration of the Work and not specifically included in the agreed upon schedule of job classifications referred to in Paragraph 11.1.A.1 or specifically covered by Paragraph 11.1.A.4, all of which are to be considered administrative costs covered by the Contractor's fee.

2. Expenses of Contractor's principal and branch offices other than Contractor's office at the Site.

3. Any part of Contractor's capital expenses, including interest on Contractor's capital employed for the Work and charges against Contractor for delinquent payments.

4. Costs due to the negligence of Contractor, any Subcontractor, or anyone directly or indirectly employed by any of them or for whose acts any of them may be liable, including but not limited to, the correction of defective Work, disposal of materials or equipment wrongly supplied, and making good any damage to property.

5. Other overhead or general expense costs of any kind and the costs of any item not specifically and expressly included in Paragraphs 11.1.A.

C. *Contractor's Fee:* When all the Work is performed on the basis of cost-plus, Contractor's fee shall be determined as set forth in the Agreement. When the value of any Work covered by a Change Order or when a Claim for an adjustment in Contract Price is determined on the basis of Cost of the Work, Contractor's fee shall be determined as set forth in Paragraph 12.1.C.

D. *Documentation:* Whenever the Cost of the Work for any purpose is to be determined pursuant to Paragraphs 11.1.A and 11.1.B, Contractor will establish and maintain records thereof in accordance with generally accepted accounting practices and submit in a form acceptable to Engineer an itemized cost breakdown together with supporting data.

11.2 *Allowances*

A. It is understood that Contractor has included in the Contract Price all allowances so named in the Contract Documents and shall cause the Work so covered to be performed for such

sums and by such persons or entities as may be acceptable to Owner and Engineer.

B. *Cash Allowances:*

1. Contractor agrees that:

the cash allowances include the cost to Contractor (less any applicable trade discounts) of materials and equipment required by the allowances to be delivered at the Site, and all applicable taxes; and Contractor's costs for unloading and handling on the Site, labor, installation, overhead, profit, and other expenses contemplated for the cash allowances have been included in the Contract Price and not in the allowances, and no demand for additional payment on account of any of the foregoing will be valid.

C. *Contingency Allowance:*

1. Contractor agrees that a contingency allowance, if any, is for the sole use of Owner to cover unanticipated costs.

D. Prior to *final* payment, an appropriate Change Order will be issued as recommended by Engineer to reflect actual amounts due Contractor on account of Work covered by allowances, and the Contract Price shall be correspondingly adjusted.

11.3 *Unit Price Work*

A. Where the Contract Documents provide that all or part of the Work is to be Unit Price Work, initially the Contract Price will be deemed to include for all Unit Price Work an amount equal to the sum of the unit price for each separately identified item of Unit Price Work times the estimated quantity of each item as indicated in the Agreement.

B. The estimated quantities of items of Unit Price Work are not guaranteed and are solely for the purpose of comparison of Bids and determining an initial Contract Price. Determinations of the actual quantities and classifications of Unit Price Work performed by Contractor will be made by Engineer subject to the provisions of Paragraph 9.7.

C. Each unit price will be deemed to include an amount considered by Contractor to be adequate to cover Contractor's overhead and profit for each separately identified item.

D. The unit price of an item of Unit Price Work shall be subject to reevaluation and adjustment under the following conditions:

1. if the Bid price of a particular item of Unit Price Work amounts to 25% percent or more of the Contract Price and the variation in the quantity of that particular item of Unit Price Work performed by Contractor differs by more than 10% percent from the estimated quantity of such item indicated in the Agreement; and

2. if there is no corresponding adjustment with respect to any other item of Work; and

3. if Contractor believes that Contractor has incurred additional expense as a result thereof or if Owner believes that the quantity variation entitles Owner to an adjustment in the unit price, either Owner or Contractor may make a Claim for an adjustment in the Contract Price in accordance with Article 10 if the parties are unable to agree as to the effect of any such variations in the quantity of Unit Price Work performed.

PART 2 - ARTICLE 12: CHANGE OF CONTRACT PRICE; CHANGE OF CONTRACT TIMES

12.1 *Change of Contract Price*

A. The Contract Price may only be changed by a Change Order. Any Claim for an adjustment in the Contract Price shall be based on written notice submitted by the party making the Claim to the Engineer and the other party to the Contract in accordance with the provisions of Paragraph 10.5.

B. The value of any Work covered by a Change Order or of any Claim for an adjustment in the Contract Price will be determined as follows:

1. where the Work involved is covered by unit prices contained in the Contract Documents, by application of such unit prices to the quantities of the items involved (subject to the provisions of Paragraph 11.3); or

2. where the Work involved is not covered by unit prices contained in the Contract Documents, by a mutually agreed lump sum (which may include an allowance for overhead and profit not necessarily in accordance with Paragraph 12.1.C.2); or

3. where the Work involved is not covered by unit prices contained in the Contract Documents and agreement to a lump sum is not reached under Paragraph 12.1.B.2, on the basis of the Cost of the Work (determined as provided in Paragraph 11.1) plus a Contractor's fee for overhead and profit (determined as provided in Paragraph 12.1.C).

C. *Contractor's Fee:* The Contractor's fee for overhead and profit shall be determined as follows:

1. a mutually acceptable fixed fee; or

2. if a fixed fee is not agreed upon, then a fee based on the following percentages of the various portions of the Cost of the Work:

a. for costs incurred under Paragraphs 11.1.A.1 and 11.1.A.2, the Contractor's fee shall be 15 percent;

b. for costs incurred under Paragraph 11.1.A.3, the Contractor's fee shall be five percent;

c. where one or more tiers of subcontracts are on the basis of Cost of the Work plus a fee and no fixed fee is agreed upon, the intent of Paragraphs 12.1.C.2.a and 12.1.C.2.b is that the Subcontractor who actually performs the Work, at whatever tier, will be paid a fee of 15 percent of the costs incurred by such Subcontractor under Paragraphs 11.1.A.1 and 11.1.A.2 and that any higher tier Subcontractor and Contractor will each be paid a fee of five percent of the amount paid to the next

lower tier Subcontractor, provided, however, that on any subcontracted work the total maximum fee to be paid by Owner under this subparagraph shall be no greater than 27 percent of the costs incurred by the Subcontractor who actually performs the work;

d. no fee shall be payable on the basis of costs itemized under Paragraphs 11.1.A.4, 11.1.A.5, and 11.1.B;

e. the amount of credit to be allowed by Contractor to Owner for any change which results in a net decrease in cost will be the amount of the actual net decrease in cost plus a deduction in Contractor's fee by an amount equal to five percent of such net decrease; and

f. when both additions and credits are involved in any one change, the adjustment in Contractor's fee shall be computed on the basis of the net change in accordance with Paragraphs 12.1.C.2.a through 12.1.C.2.e.

12.2 *Change of Contract Times*

a. The Contract Times may only be changed by a Change Order. Any Claim for an adjustment in the Contract Times shall be based on written notice submitted by the party making the Claim to the Engineer and the other party to the Contract in accordance with the provisions of Paragraph 10.5.

b. Any adjustment of the Contract Times covered by a Change Order or any Claim for an adjustment in the Contract Times will be determined in accordance with the provisions of this Article 12.

12.3 *Delays*

A. Where Contractor is prevented from completing any part of the Work within the Contract Times due to delay beyond the control of Contractor, the Contract Times will be extended in an amount equal to the time lost due to such delay if a Claim is made therefor as provided in Paragraph 12.2.A. Delays beyond the control of Contractor shall include, but not be limited to, acts or neglect by Owner, acts or neglect of utility owners or other contractors performing other work as contemplated by Article 7, fires, floods, epidemics, abnormal weather conditions, or acts of God.

B. If Owner, Engineer, or other contractors or utility owners performing other work for Owner as contemplated by Article 7, or anyone for whom Owner is responsible, delays, disrupts, or interferes with the performance or progress of the Work, then Contractor shall be entitled to an equitable adjustment in the Contract Price or the Contract Times, or both. Contractor's entitlement to an adjustment of the Contract Times is conditioned on such adjustment being essential to Contractor's ability to complete the Work within the Contract Times.

C. If Contractor is delayed in the performance or progress of the Work by fire, flood, epidemic, abnormal weather conditions, acts of God, acts or failures to act of utility owners not under the control of Owner, or other causes not the fault of and beyond control of Owner and Contractor, then Contractor shall be entitled to an equitable adjustment in Contract Times, if such adjustment is essential to Contractor's ability to complete the Work within the Contract Times. Such an adjustment shall be Contractor's sole and exclusive remedy for the delays described in this Paragraph 12.3.C.

D. Owner, Engineer, and their officers, directors, members, partners, employees, agents, consultants, or subcontractors shall not be liable to Contractor for any claims, costs, losses, or damages (including but not limited to all fees and charges of engineers, architects, attorneys, and other professionals and all court or arbitration or other dispute resolution costs) sustained by Contractor on or in connection with any other project or anticipated project.

E. Contractor shall not be entitled to an adjustment in Contract Price or Contract Times for delays within the control of Contractor. Delays attributable to and within the control of a Subcontractor or Supplier shall be deemed to be delays within the control of Contractor.

PART 2 - ARTICLE 13: TESTS AND INSPECTIONS; CORRECTION, REMOVAL OR ACCEPTANCE OF DEFECTIVE WORK

13.1 *Notice of Defects*

A. Prompt notice of all defective Work of which Owner or Engineer has actual knowledge will be given to Contractor. Defective Work may be rejected, corrected, or accepted as provided in this Article 13.

13.2 *Access to Work*

A. Owner, Engineer, their consultants and other representatives and personnel of Owner, independent testing laboratories, and governmental agencies with jurisdictional interests will have access to the Site and the Work at reasonable times for their observation, inspection, and testing. Contractor shall provide them proper and safe conditions for such access and advise them of Contractor's safety procedures and programs so that they may comply therewith as applicable.

13.3 *Tests and Inspections*

A. Contractor shall give Engineer timely notice of readiness of the Work for all required inspections, tests, or approvals and shall cooperate with inspection and testing personnel to facilitate required inspections or tests.

B. Owner shall employ and pay for the services of an independent testing laboratory to perform all inspections, tests, or approvals required by the Contract Documents except:

1. For inspections, tests, or approvals covered by Paragraphs 13.3.C and 13.3.D below;

2. Costs incurred in connection with tests or inspections conducted pursuant to Paragraph 13.4.B shall be paid as provided in Paragraph 13.4.C; and

3. For **Failed** tests or Laboratory callouts when the Contractor is not ready; and

4. As otherwise specifically provided in the Contract Documents.

C. If Laws or Regulations of any public body having jurisdiction require any Work (or part thereof) specifically to be inspected, tested, or approved by an employee or other representative of such public body, Contractor shall assume full responsibility for arranging and obtaining such inspections, tests, or approvals, pay all costs in connection therewith, and furnish Engineer the required certificates of inspection or approval.

D. Contractor shall be responsible for arranging and obtaining and shall pay all costs in

connection with any inspections, tests, or approvals required for Owner's and Engineer's acceptance of materials or equipment to be incorporated in the Work; or acceptance of materials, mix designs, or equipment submitted for approval prior to Contractor's purchase thereof for incorporation in the Work. Such inspections, tests, or approvals shall be performed by organizations acceptable to Owner and Engineer.

E. If any Work (or the work of others) that is to be inspected, tested, or approved is covered by Contractor without written concurrence of Engineer, Contractor shall, if requested by Engineer, uncover such Work for observation.

F. Uncovering Work as provided in Paragraph 13.3.E shall be at Contractor's expense unless Contractor has given Engineer timely notice of Contractor's intention to cover the same and Engineer has not acted with reasonable promptness in response to such notice.

13.4 *Uncovering Work*

A. If any Work is covered contrary to the written request of Engineer, it must, if requested by Engineer, be uncovered for Engineer's observation and replaced at Contractor's expense.

B. If Engineer considers it necessary or advisable that covered Work be observed by Engineer or inspected or tested by others, Contractor, at Engineer's request, shall uncover, expose, or otherwise make available for observation, inspection, or testing as Engineer may require, that portion of the Work in question, furnishing all necessary labor, material, and equipment.

C. If it is found that the uncovered Work is defective, Contractor shall pay all claims, costs, losses, and damages (including but not limited to all fees and charges of engineers, architects, attorneys, and other professionals and all court or arbitration or other dispute resolution costs) arising out of or relating to such uncovering, exposure, observation, inspection, and testing, and of satisfactory replacement or reconstruction (including but not limited to all costs of repair or replacement of work of others); and Owner shall be entitled to an appropriate decrease in the Contract Price. If the parties are unable to agree as to the amount thereof, Owner may make a Claim therefor as provided in Paragraph 10.5.

D. If the uncovered Work is not found to be defective, Contractor shall be allowed an increase in the Contract Price or an extension of the Contract Times, or both, directly attributable to such uncovering, exposure, observation, inspection, testing, replacement, and reconstruction. If the parties are unable to agree as to the amount or extent thereof, Contractor may make a Claim therefor as provided in Paragraph 10.5.

13.5 *Owner May Stop the Work*

A. If the Work is defective, or Contractor fails to supply sufficient skilled workers or suitable materials or equipment, or fails to perform the Work in such a way that the completed Work will conform to the Contract Documents, Owner may order Contractor to stop the Work, or any portion thereof, until the cause for such order has been eliminated; however,

this right of Owner to stop the Work shall not give rise to any duty on the part of Owner to exercise this right for the benefit of Contractor, any Subcontractor, any Supplier, any other individual or entity, or any surety for, or employee or agent of any of them.

13.6 *Correction or Removal of Defective Work*

Promptly after receipt of written notice, Contractor shall correct all defective Work, whether or not fabricated, installed, or completed, or, if the Work has been rejected by Engineer, remove it from the Project and replace it with Work that is not defective. Contractor shall pay all claims, costs, losses, and damages (including but not limited to all fees and charges of engineers, architects, attorneys, and other professionals and all court or arbitration or other dispute resolution costs) arising out of or relating to such correction or removal (including but not limited to all costs of repair or replacement of work of others).

When correcting defective Work under the terms of this Paragraph 13.6 or Paragraph 13.7, Contractor shall take no action that would void or otherwise impair Owner's special warranty and guarantee, if any, on said Work.

13.7 *Correction Period*

A. If within one year after the date of Substantial Completion (or such longer period of time as may be prescribed by the terms of any applicable special guarantee required by the Contract Documents) or by any specific provision of the Contract Documents, any Work is found to be defective, or if the repair of any damages to the land or areas made available for Contractor's use by Owner or permitted by Laws and Regulations as contemplated in Paragraph 6.11.A is found to be defective, Contractor shall promptly, without cost to Owner and in accordance with Owner's written instructions:

1. repair such defective land or areas; or

2. correct such defective Work; or

3. if the defective Work has been rejected by Owner, remove it from the Project and replace it with Work that is not defective, and

4. satisfactorily correct or repair or remove and replace any damage to other Work, to the work of others or other land or areas resulting therefrom.

B. If Contractor does not promptly comply with the terms of Owner's written instructions, or in an emergency where delay would cause serious risk of loss or damage, Owner may have the defective Work corrected or repaired or may have the rejected Work removed and replaced. All claims, costs, losses, and damages (including but not limited to all fees and charges of engineers, architects, attorneys, and other professionals and all court or arbitration or other dispute resolution costs) arising out of or relating to such correction or repair or such removal and replacement (including but not limited to all costs of repair or replacement of work of others) will be paid by Contractor.

C. In special circumstances where a particular item of equipment is placed in continuous service before Substantial Completion of all the Work, the correction period for that item may start to run from an earlier date if so provided in the Specifications.

D. Where defective Work (and damage to other Work resulting therefrom) has been corrected or removed and replaced under this Paragraph 13.7, the correction period hereunder with respect to such Work will be extended for an additional period of one year after such correction or removal and replacement has been satisfactorily completed.

E. Contractor's obligations under this Paragraph 13.7 are in addition to any other obligation or warranty. The provisions of this Paragraph 13.7 shall not be construed as a substitute for, or a waiver of, the provisions of any applicable statute of limitation or repose.

13.8 *Acceptance of Defective Work*

A. If, instead of requiring correction or removal and replacement of defective Work, Owner (and, prior to Engineer's recommendation of final payment, Engineer) prefers to accept it, Owner may do so. Contractor shall pay all claims, costs, losses, and damages (including but not limited to all fees and charges of engineers, architects, attorneys, and other professionals and all court or arbitration or other dispute resolution costs) attributable to Owner's evaluation of and determination to accept such defective Work (such costs to be approved by Engineer as to reasonableness) and for the diminished value of the Work to the extent not otherwise paid by Contractor pursuant to this sentence. If any such acceptance occurs prior to Engineer's recommendation of final payment, a Change Order will be issued incorporating the necessary revisions in the Contract Documents with respect to the Work, and Owner shall be entitled to an appropriate decrease in the Contract Price, reflecting the diminished value of Work so accepted. If the parties are unable to agree as to the amount thereof, Owner may make a Claim therefor as provided in Paragraph 10.5. If the acceptance occurs after such recommendation, an appropriate amount will be paid by Contractor to Owner.

13.9 *Owner May Correct Defective Work*

A. If Contractor fails within a reasonable time after written notice from Engineer to correct defective Work, or to remove and replace rejected Work as required by Engineer in accordance with Paragraph 13.6.A, or if Contractor fails to perform the Work in accordance with the Contract Documents, or if Contractor fails to comply with any other provision of the Contract Documents, Owner may, after seven (7) days written notice to Contractor, correct, or remedy any such deficiency.

B. In exercising the rights and remedies under this Paragraph 13.9, Owner shall proceed expeditiously. In connection with such corrective or remedial action, Owner may exclude Contractor from all or part of the Site, take possession of all or part of the Work and suspend Contractor's services related thereto, take possession of Contractor's tools, appliances,

construction equipment and machinery at the Site, and incorporate in the Work all materials and equipment stored at the Site or for which Owner has paid Contractor but which are stored elsewhere. Contractor shall allow Owner, Owner's representatives, agents and employees, Owner's other contractors, and Engineer and Engineer's consultants access to the Site to enable Owner to exercise the rights and remedies under this Paragraph.

C. All claims, costs, losses, and damages (including but not limited to all fees and charges of engineers, architects, attorneys, and other professionals and all court or arbitration or other dispute resolution costs) incurred or sustained by Owner in exercising the rights and remedies under this Paragraph 13.9 will be charged against Contractor, and a Change Order will be issued incorporating the necessary revisions in the Contract Documents with respect to the Work; and Owner shall be entitled to an appropriate decrease in the Contract Price. If the parties are unable to agree as to the amount of the adjustment, Owner may make a Claim therefor as provided in Paragraph 10.5. Such claims, costs, losses and damages will include but not be limited to all costs of repair, or replacement of work of others destroyed or damaged by correction, removal, or replacement of Contractor's defective Work.

D. Contractor shall not be allowed an extension of the Contract Times because of any delay in the performance of the Work attributable to the exercise by Owner of Owner's rights and remedies under this Paragraph 13.9.

PART 2 - ARTICLE 14: PAYMENTS TO CONTRACTOR AND COMPLETION

14.1 *Schedule of Values*

A. The Schedule of Values established as provided in Paragraph 2.7.A will serve as the basis for progress payments and will be incorporated into a form of Application for Payment acceptable to Engineer. Progress payments on account of Unit Price Work will be based on the number of units completed.

14.2 *Progress Payments*

A. *Applications for Payments:*

1. At least 20 days before the date established in the Agreement for each progress payment (but not more often than once a month), Contractor shall submit to Engineer for review an Application for Payment filled out and signed by Contractor covering the Work completed as of the date of the Application and accompanied by such supporting documentation as is required by the Contract Documents. If payment is requested on the basis of materials and equipment not incorporated in the Work but delivered and suitably stored at the Site or at another location agreed to in writing, the Application for Payment shall also be accompanied by a bill of sale, invoice, or other documentation warranting that Owner has received the materials and equipment free and clear of all Liens and evidence that the materials and equipment are covered by appropriate property insurance or other arrangements to protect Owner's interest therein, all of which must be satisfactory to Owner.

2. Beginning with the second Application for Payment, each Application shall include an affidavit of Contractor stating that all previous progress payments received on account of the Work have been applied on account to discharge Contractor's legitimate obligations associated with prior Applications for Payment.

3. The amount of retainage with respect to progress payments will be as stipulated in the Agreement.

B. *Review of Applications:*

1. Engineer will, within 10 days after receipt of each Application for Payment, either indicate in writing a recommendation of payment and present the Application to Owner or return the Application to Contractor indicating in writing Engineer's reasons for refusing to recommend payment. In the latter case, Contractor may make the necessary corrections and resubmit the Application.

2. Engineer's recommendation of any payment requested in an Application for Payment

will constitute a representation by Engineer to Owner, based on Engineer's observations of the executed Work as an experienced and qualified design professional, and on Engineer's review of the Application for Payment and the accompanying data and schedules, that to the best of Engineer's knowledge, information and belief:

a. the Work has progressed to the point indicated;
b. the quality of the Work is generally in accordance with the Contract Documents (subject to an evaluation of the Work as a functioning whole prior to or upon Substantial Completion, the results of any subsequent tests called for in the Contract Documents, a final determination of quantities and classifications for Unit Price Work under Paragraph 9.7, and any other qualifications stated in the recommendation); and

c. the conditions precedent to Contractor's being entitled to such payment appear to have been fulfilled in so far as it is Engineer's responsibility to observe the Work.

3. By recommending any such payment Engineer will not thereby be deemed to have represented that:

a. inspections made to check the quality or the quantity of the Work as it has been performed have been exhaustive, extended to every aspect of the Work in progress, or involved detailed inspections of the Work beyond the responsibilities specifically assigned to Engineer in the Contract Documents; or

b. there may not be other matters or issues between the parties that might entitle Contractor to be paid additionally by Owner or entitle Owner to withhold payment to Contractor.

4. Neither Engineer's review of Contractor's Work for the purposes of recommending payments nor Engineer's recommendation of any payment, including final payment, will impose responsibility on Engineer:

a. to supervise, direct, or control the Work, or

b. for the means, methods, techniques, sequences, or procedures of construction, or the safety precautions and programs incident thereto, or

c. for Contractor's failure to comply with Laws and Regulations applicable to Contractor's performance of the Work, or

d. to make any examination to ascertain how or for what purposes Contractor has used the moneys paid on account of the Contract Price, or

e. to determine that title to any of the Work, materials, or equipment has passed to Owner free and clear of any Liens.

5. Engineer may refuse to recommend the whole or any part of any payment if, in Engineer's opinion, it would be incorrect to make the representations to Owner stated in Paragraph 14.2.B.2. Engineer may also refuse to recommend any such payment or, because of subsequently discovered evidence or the results of subsequent inspections or tests, revise or revoke any such payment recommendation previously made, to such extent as may be necessary in Engineer's opinion to protect Owner from loss because:

   a. the Work is defective, or completed Work has been damaged, requiring correction or replacement;

   b. the Contract Price has been reduced by Change Orders;

   c. Owner has been required to correct defective Work or complete Work in accordance with Paragraph 13.09; or

   d. Engineer has actual knowledge of the occurrence of any of the events enumerated in Paragraph 15.02.A.

C. *Payment Becomes Due:*

1. Ten days after presentation of the Application for Payment to Owner with Engineer's recommendation, the amount recommended will (subject to the provisions of Paragraph 14.2.D) become due, and when due will be paid by Owner to Contractor.

D. *Reduction in Payment:*

1. Owner may refuse to make payment of the full amount recommended by Engineer because:

   a. claims have been made against Owner on account of Contractor's performance or furnishing of the Work;

   b. Liens have been filed in connection with the Work, except where Contractor has delivered a specific bond satisfactory to Owner to secure the satisfaction and discharge of such Liens;

   c. there are other items entitling Owner to a set-off against the amount recommended; or

   d. Owner has actual knowledge of the occurrence of any of the events enumerated in Paragraphs 14.2.B.5.a through 14.2.B.5.c or Paragraph 15.2.A.

2. If Owner refuses to make payment of the full amount recommended by Engineer, Owner will give Contractor immediate written notice (with a copy to Engineer)

stating the reasons for such action and promptly pay Contractor any amount remaining after deduction of the amount so withheld. Owner shall promptly pay Contractor the amount so withheld, or any adjustment thereto agreed to by Owner and Contractor, when Contractor remedies the reasons for such action.

3. Upon a subsequent determination that Owner's refusal of payment was not justified, the amount wrongfully withheld shall be treated as an amount due as determined by Paragraph 14.2.C.1 and subject to interest as provided in the Agreement.

14.3 *Contractor's Warranty of Title*

A. Contractor warrants and guarantees that title to all Work, materials, and equipment covered by any Application for Payment, whether incorporated in the Project or not, will pass to Owner no later than the time of payment free and clear of all Liens.

14.4 *Substantial Completion*

A. When Contractor considers the entire Work ready for its intended use Contractor shall notify Owner and Engineer in writing that the entire Work is substantially complete (except for items specifically listed by Contractor as incomplete) and request that Engineer issue a certificate of Substantial Completion.

B. Promptly after Contractor's notification, Owner, Contractor, and Engineer shall make an inspection of the Work to determine the status of completion. If Engineer does not consider the Work substantially complete, Engineer will notify Contractor in writing giving the reasons therefor.

C. If Engineer considers the Work substantially complete, Engineer will deliver to Owner a tentative certificate of Substantial Completion which shall fix the date of Substantial Completion. There shall be attached to the certificate a tentative list of items to be completed or corrected before final payment. Owner shall have seven days after receipt of the tentative certificate during which to make written objection to Engineer as to any provisions of the certificate or attached list. If, after considering such objections, Engineer concludes that the Work is not substantially complete, Engineer will, within 14 days after submission of the tentative certificate to Owner, notify Contractor in writing, stating the reasons therefor. If, after consideration of Owner's objections, Engineer considers the Work substantially complete, Engineer will, within said 14 days, execute and deliver to Owner and Contractor a definitive certificate of Substantial Completion (with a revised tentative list of items to be completed or corrected) reflecting such changes from the tentative certificate as Engineer believes justified after consideration of any objections from Owner.

D. At the time of delivery of the tentative certificate of Substantial Completion, Engineer will deliver to Owner and Contractor a written recommendation as to division of responsibilities pending final payment between Owner and Contractor with respect to security, operation, safety, and protection of the Work, maintenance, heat, utilities, insurance, and warranties

and guarantees. Unless Owner and Contractor agree otherwise in writing and so inform Engineer in writing prior to Engineer's issuing the definitive certificate of Substantial Completion, Engineer's aforesaid recommendation will be binding on Owner and Contractor until final payment.

E. Owner shall have the right to exclude Contractor from the Site after the date of Substantial Completion subject to allowing Contractor reasonable access to remove its property and complete or correct items on the tentative list.

14.5 *Partial Utilization*

A. Prior to Substantial Completion of all the Work, Owner may use or occupy any substantially completed part of the Work which has specifically been identified in the Contract Documents, or which Owner, Engineer, and Contractor agree constitutes a separately functioning and usable part of the Work that can be used by Owner for its intended purpose without significant interference with Contractor's performance of the remainder of the Work, subject to the following conditions:

1. Owner at any time may request Contractor in writing to permit Owner to use or occupy any such part of the Work which Owner believes to be ready for its intended use and substantially complete. If and when Contractor agrees that such part of the Work is substantially complete, Contractor, Owner, and Engineer will follow the procedures of Paragraph 14.4.A through D for that part of the Work.

2. Contractor at any time may notify Owner and Engineer in writing that Contractor considers any such part of the Work ready for its intended use and substantially complete and request Engineer to issue a certificate of Substantial Completion for that part of the Work.

3. Within a reasonable time after either such request, Owner, Contractor, and Engineer shall make an inspection of that part of the Work to determine its status of completion. If Engineer does not consider that part of the Work to be substantially complete, Engineer will notify Owner and Contractor in writing giving the reasons therefor. If Engineer considers that part of the Work to be substantially complete, the provisions of Paragraph 14.04 will apply with respect to certification of Substantial Completion of that part of the Work and the division of responsibility in respect thereof and access thereto.

4. No use or occupancy or separate operation of part of the Work may occur prior to compliance with the requirements of Paragraph 5.10 regarding property insurance.

14.6 *Final Inspection*

A. Upon written notice from Contractor that the entire Work or an agreed portion thereof is

complete, Engineer will promptly make a final inspection with Owner and Contractor and will notify Contractor in writing of all particulars in which this inspection reveals that the Work is incomplete or defective. Contractor shall immediately take such measures as are necessary to complete such Work or remedy such deficiencies.

14.7 *Final Payment*

A. *Application for Payment:*

1. After Contractor has, in the opinion of Engineer, satisfactorily completed all corrections identified during the final inspection and has delivered, in accordance with the Contract Documents, all maintenance and operating instructions, schedules, guarantees, bonds, certificates or other evidence of insurance, certificates of inspection, marked-up record documents (as provided in Paragraph 6.12), and other documents, Contractor may make application for final payment following the procedure for progress payments.

2. The final Application for Payment shall be accompanied (except as previously delivered) by:

   a. all documentation called for in the Contract Documents, including but not limited to the evidence of insurance required by Paragraph 5.4.B.6;

   b. consent of the surety, if any, to final payment;

   c. a list of all Claims against Owner that Contractor believes are unsettled; and

   d. complete and legally effective releases or waivers (satisfactory to Owner) of all Lien rights arising out of or Liens filed in connection with the Work.

3. In lieu of the releases or waivers of Liens specified in Paragraph 14.7.A.2 and as approved by Owner, Contractor may furnish receipts or releases in full and an affidavit of Contractor that: (i) the releases and receipts include all labor, services, material, and equipment for which a Lien could be filed; and (ii) all payrolls, material and equipment bills, and other indebtedness connected with the Work for which Owner might in any way be responsible, or which might in any way result in liens or other burdens on Owner's property, have been paid or otherwise satisfied. If any Subcontractor or Supplier fails to furnish such a release or receipt in full, Contractor may furnish a bond or other collateral satisfactory to Owner to indemnify Owner against any Lien.

B. *Engineer's Review of Application and Acceptance:*

1. If, on the basis of Engineer's observation of the Work during construction and final inspection, and Engineer's review of the final Application for Payment and accompanying documentation as required by the Contract Documents, Engineer is

satisfied that the Work has been completed and Contractor's other obligations under the Contract Documents have been fulfilled, Engineer will, within ten days after receipt of the final Application for Payment, indicate in writing Engineer's recommendation of payment and present the Application for Payment to Owner for payment. At the same time Engineer will also give written notice to Owner and Contractor that the Work is acceptable subject to the provisions of Paragraph 14.9. Otherwise, Engineer will return the Application for Payment to Contractor, indicating in writing the reasons for refusing to recommend final payment, in which case Contractor shall make the necessary corrections and resubmit the Application for Payment.

C. *Payment Becomes Due:*

1. Thirty days after the presentation to Owner of the Application for Payment and accompanying documentation, the amount recommended by Engineer, less any sum Owner is entitled to set off against Engineer's recommendation, including but not limited to liquidated damages, will become due and will be paid by Owner to Contractor.

14.8 *Final Completion Delayed*

If, through no fault of Contractor, final completion of the Work is significantly delayed, and if Engineer so confirms, Owner shall, upon receipt of Contractor's final Application for Payment (for Work fully completed and accepted) and recommendation of Engineer, and without terminating the Contract, make payment of the balance due for that portion of the Work fully completed and accepted. If the remaining balance to be held by Owner for Work not fully completed or corrected is less than the retainage stipulated in the Agreement, and if bonds have been furnished as required in Paragraph 5.1, the written consent of the surety to the payment of the balance due for that portion of the Work fully completed and accepted shall be submitted by Contractor to Engineer with the Application for such payment. Such payment shall be made under the terms and conditions governing final payment, except that it shall not constitute a waiver of Claims.

14.9 *Waiver of Claims*

A. The making and acceptance of final payment will constitute:

1. a waiver of all Claims by Owner against Contractor, except Claims arising from unsettled Liens, from defective Work appearing after final inspection pursuant to Paragraph 14.6, from failure to comply with the Contract Documents or the terms of any special guarantees specified therein, or from Contractor's continuing obligations under the Contract Documents; and a waiver of all Claims by Contractor against Owner other than those previously made in accordance with the requirements herein and expressly acknowledged by Owner in writing as still unsettled.

PART 2 - ARTICLE 15: SUSPENSION OF WORK AND TERMINATION

15.1 *Owner May Suspend Work*

A. At any time and without cause, Owner may suspend the Work or any portion thereof for a period of not more than 90 consecutive days by notice in writing to Contractor and Engineer which will fix the date on which Work will be resumed. Contractor shall resume the Work on the date so fixed. Contractor shall be granted an adjustment in the Contract Price or an extension of the Contract Times, or both, directly attributable to any such suspension if Contractor makes a Claim therefor as provided in Paragraph 10.5.

15.2 *Owner May Terminate for Cause*

A. The occurrence of any one or more of the following events will justify termination for cause:

1. Contractor's persistent failure to perform the Work in accordance with the Contract Documents (including, but not limited to, failure to supply sufficient skilled workers or suitable materials or equipment or failure to adhere to the Progress Schedule established under Paragraph 2.7 as adjusted from time to time pursuant to Paragraph 6.4);

2. Contractor's disregard of Laws or Regulations of any public body having jurisdiction;

3. Contractor's repeated disregard of the authority of Engineer; or

4. Contractor's violation in any substantial way of any provisions of the Contract Documents.

B. If one or more of the events identified in Paragraph 15.2.A occur, Owner may, after giving Contractor (and surety) seven days written notice of its intent to terminate the services of Contractor:

1. exclude Contractor from the Site, and take possession of the Work and of all Contractor's tools, appliances, construction equipment, and machinery at the Site, and use the same to the full extent they could be used by Contractor (without liability to Contractor for trespass or conversion);

2. incorporate in the Work all materials and equipment stored at the Site or for which Owner has paid Contractor but which are stored elsewhere; and

3. complete the Work as Owner may deem expedient.

C. If Owner proceeds as provided in Paragraph 15.2.B, Contractor shall not be entitled to receive

any further payment until the Work is completed. If the unpaid balance of the Contract Price exceeds all claims, costs, losses, and damages (including but not limited to all fees and charges of engineers, architects, attorneys, and other professionals and all court or arbitration or other dispute resolution costs) sustained by Owner arising out of or relating to completing the Work, such excess will be paid to Contractor. If such claims, costs, losses, and damages exceed such unpaid balance, Contractor shall pay the difference to Owner. Such claims, costs, losses, and damages incurred by Owner will be reviewed by Engineer as to their reasonableness and, when so approved by Engineer, incorporated in a Change Order. When exercising any rights or remedies under this Paragraph, Owner shall not be required to obtain the lowest price for the Work performed.

D. Notwithstanding Paragraphs 15.2.B and 15.2.C, Contractor's services will not be terminated if Contractor begins within seven days of receipt of notice of intent to terminate to correct its failure to perform and proceeds diligently to cure such failure within no more than 30 days of receipt of said notice.

E. Where Contractor's services have been so terminated by Owner, the termination will not affect any rights or remedies of Owner against Contractor then existing or which may thereafter accrue. Any retention or payment of moneys due Contractor by Owner will not release Contractor from liability.

F. If and to the extent that Contractor has provided a performance bond under the provisions of Paragraph 5.1.A, the termination procedures of that bond shall supersede the provisions of Paragraphs 15.2.B and 15.2.C.

15.3 *Owner May Terminate For Convenience*

A. Upon thirty (30) days written notice to Contractor and Engineer, Owner may, without cause and without prejudice to any other right or remedy of Owner, terminate the Contract. In such case, Contractor shall be paid for (without duplication of any items):

1. completed and acceptable Work executed in accordance with the Contract Documents prior to the effective date of termination, including fair and reasonable sums for overhead and profit on such Work;

2. expenses sustained prior to the effective date of termination in performing services and furnishing labor, materials, or equipment as required by the Contract Documents in connection with uncompleted Work, plus fair and reasonable sums for overhead and profit on such expenses;

3. all claims, costs, losses, and damages (including but not limited to all fees and charges of engineers, architects, attorneys, and other professionals and all court or arbitration or other dispute resolution costs) incurred in settlement of terminated contracts with Subcontractors, Suppliers, and others; and

4. reasonable expenses directly attributable to termination.

B. Contractor shall not be paid on account of loss of anticipated profits or revenue or other economic loss arising out of or resulting from such termination.

15.4 *Contractor May Stop Work or Terminate*

A. If, through no act or fault of Contractor, (i) the Work is suspended for more than 90 consecutive days by Owner or under an order of court or other public authority, or (ii) Engineer fails to act on any Application for Payment within 30 days after it is submitted, or (iii) Owner fails for 30 days to pay Contractor any sum finally determined to be due, then Contractor may, upon seven days written notice to Owner and Engineer, and provided Owner or Engineer do not remedy such suspension or failure within that time, terminate the Contract and recover from Owner payment on the same terms as provided in Paragraph 15.3.

B. In lieu of terminating the Contract and without prejudice to any other right or remedy, if Engineer has failed to act on an Application for Payment within 30 days after it is submitted, or Owner has failed for 30 days to pay Contractor any sum finally determined to be due, Contractor may, seven days after written notice to Owner and Engineer, stop the Work until payment is made of all such amounts due Contractor, including interest thereon. The provisions of this Paragraph 15.4 are not intended to preclude Contractor from making a Claim under Paragraph 10.5 for an adjustment in Contract Price or Contract Times or otherwise for expenses or damage directly attributable to Contractor's stopping the Work as permitted by this Paragraph.

PART 2 - ARTICLE 16: DISPUTE RESOLUTION

16.1 Any and all disputes that arise out of the performance of this Contract shall litigated in the 23rd Judicial District Court in and for the Parish of Ascension. Any reference to arbitration in any Contract Documents is hereby expressly waived and deleted.

PART 2 - ARTICLE 17: MISCELLANEOUS

17.1 *Giving Notice*

A. Whenever any provision of the Contract Documents requires the giving of written notice, it will be deemed to have been validly given if:

1. delivered in person to the individual or to a member of the firm or to an officer of the corporation for whom it is intended; or

2. delivered at or sent by registered or certified mail, postage prepaid, to the last business address known to the giver of the notice.

17.2 *Computation of Times*

A. When any period of time is referred to in the Contract Documents by days, it will be computed to exclude the first and include the last day of such period. If the last day of any such period falls on a Saturday or Sunday or on a day made a legal holiday by the law of the applicable jurisdiction, such day will be omitted from the computation.

17.3 *Cumulative Remedies*

A. The duties and obligations imposed by these General Conditions and the rights and remedies available hereunder to the parties hereto are in addition to, and are not to be construed in any way as a limitation of, any rights and remedies available to any or all of them which are otherwise imposed or available by Laws or Regulations, by special warranty or guarantee, or by other provisions of the Contract Documents. The provisions of this Paragraph will be as effective as if repeated specifically in the Contract Documents in connection with each particular duty, obligation, right, and remedy to which they apply.

17.4 *Survival of Obligations*

A. All representations, indemnifications, warranties, and guarantees made in, required by, or given in accordance with the Contract Documents, as well as all continuing obligations indicated in the Contract Documents, will survive final payment, completion, and acceptance of the Work or termination or completion of the Contract or termination of the services of Contractor.

17.5 *Controlling Law*

A. This Contract is to be governed by the law of the state in which the Project is located.

17.6 *Headings*

A. Article and paragraph headings are inserted for convenience only and do not constitute parts of these General Conditions.

PART 3 - BID FORMS

LOUISIANA UNIFORM PUBLIC WORK BID FORM

TO: Ascension Parish Government
P. O. Box 2392
Gonzales, Louisiana 70707

BID FOR: LA 44 AT PARKER ROAD / LA 933 TURN LANE
MA-22-05

The undersigned bidder hereby declares and represents that she/he; a) has carefully examined and understands the Bidding Documents, b) has not received, relied on, or based his bid on any verbal instructions contrary to the Bidding Documents or any addenda, c) has personally inspected and is familiar with the project site, and hereby proposes to provide all labor, materials, tools, appliances and facilities as required to perform, in a workmanlike manner, all work and services for the construction and completion of the referenced project, all in strict accordance with the Bidding Documents prepared by: McKim & Creed. and dated: June 2024.

Bidders must acknowledge all addenda. The Bidder acknowledges receipt of the following **ADDENDA:** (Enter the number the Designer has assigned to each of the addenda that the Bidder is acknowledging) _____ .

TOTAL BASE BID: For all work required by the Bidding Documents (including any and all unit prices designated "Base Bid" * the sum of:

_____Dollars ($ _____)

ALTERNATES: For any and all work required by the Bidding Documents for Alternates including any and all unit prices designated as alternates in the unit price description.

~~**Alternate No. 1** *(Owner to provide description of alternate and state whether add or deduct)* for the lump sum of:~~

_____N/A_____Dollars ($ _____N/A_____)

~~**Alternate No. 2** *(Owner to provide description of alternate and state whether add or deduct)* for the lump sum of:~~

_____N/A_____Dollars ($ _____N/A_____)

~~**Alternate No. 3** *(Owner to provide description of alternate and state whether add or deduct)* for the lump sum of:~~

_____N/A_____Dollars ($_____N/A_____)

NAME OF BIDDER: _____

ADDRESS OF BIDDER:_____

_____

LOUISIANA CONTRACTOR'S LICENSE NUMBER: _____

NAME OF AUTHORIZED SIGNATORY OF BIDDER: _____

TITLE OF AUTHORIZED SIGNATORY OF BIDDER: _____

SIGNATURE OF AUTHORIZED SIGNATORY OF BIDDER **: _____

DATE: _____

* The Unit Price Form shall be used if the contract includes unit prices. Otherwise it is not required and need not be included with the form. The number of unit prices that may be included is not limited and additional sheets may be included if needed.

** If someone other than a corporate officer signs for the Bidder/Contractor, a copy of a corporate resolution or other signature authorization shall be required for submission of bid. Failure to include a copy of the appropriate signature authorization, if required, may result in the rejection of the bid unless bidder has complied with La. R.S. 38:2212(A)(1)(c) or RS 38:2212(O).

BID SECURITY in the form of a bid bond, certified check or cashier's check as prescribed by LA RS 38:2218(A) is attached to and made a part of this bid.

LOUISIANA UNIFORM PUBLIC WORK BID FORM
UNIT PRICE FORM

TO: Ascension Parish Government
42077 Churchpoint Road
Gonzales, Louisiana 70737

BID FOR: LA 44 at Parker Road / LA 933 Turn Lane
MA-22-05

UNIT PRICES: This form shall be used for any and all work required by the Bidding Documents and described as unit prices. Amounts shall be stated in figures and only in figures.

DESCRIPTION:	CLEARING AND GRUBBING			
REF. NO.	QUANTITY:	UNIT OF MEASURE:	UNIT PRICE	UNIT PRICE EXTENSION *(Quantity times Unit Price)*
201-01-00200	0.83	ACRE		

DESCRIPTION:	REMOVAL OF STRUCTURES AND OBSTRUCTIONS			
REF. NO.	QUANTITY:	UNIT OF MEASURE:	UNIT PRICE	UNIT PRICE EXTENSION *(Quantity times Unit Price)*
202-01-00100	1	LUMP		

DESCRIPTION:	REMOVAL OF DRIVEWAYS			
REF. NO.	QUANTITY:	UNIT OF MEASURE:	UNIT PRICE	UNIT PRICE EXTENSION *(Quantity times Unit Price)*
202-02-00020	149	SQYD		

DESCRIPTION:	RELOCATION OF SIGN			
REF. NO.	QUANTITY:	UNIT OF MEASURE:	UNIT PRICE	UNIT PRICE EXTENSION *(Quantity times Unit Price)*
202-03-38000	10	EACH		

Wording for "DESCRIPTION" is to be provided by the Owner.
All quantities are estimated. The contractor will be paid based upon actual quantities as verified by the Owner

LOUISIANA UNIFORM PUBLIC WORK BID FORM
UNIT PRICE FORM

TO: Ascension Parish Government
42077 Churchpoint Road
Gonzales, Louisiana 70737

BID FOR: LA 44 at Parker Road / LA 933 Turn Lane
MA-22-05

UNIT PRICES: This form shall be used for any and all work required by the Bidding Documents and described as unit prices. Amounts shall be stated in figures and only in figures.

DESCRIPTION:	RELOCATION OF SIGN POLE			
REF. NO.	QUANTITY:	UNIT OF MEASURE:	UNIT PRICE	UNIT PRICE EXTENSION *(Quantity times Unit Price)*
202-03-38020	8	EACH		

DESCRIPTION:	GENERAL EXCAVATION			
REF. NO.	QUANTITY:	UNIT OF MEASURE:	UNIT PRICE	UNIT PRICE EXTENSION *(Quantity times Unit Price)*
203-01-00100	307	CUYD		

DESCRIPTION:	GENERAL EMBANKMENT			
REF. NO.	QUANTITY:	UNIT OF MEASURE:	UNIT PRICE	UNIT PRICE EXTENSION *(Quantity times Unit Price)*
203-03-00100	909	CUYD		

DESCRIPTION:	GEOTEXTILE FABRIC			
REF. NO.	QUANTITY:	UNIT OF MEASURE:	UNIT PRICE	UNIT PRICE EXTENSION *(Quantity times Unit Price)*
203-08-00100	16	SQYD		

DESCRIPTION:	TEMPROARY HAY BALES			
REF. NO.	QUANTITY:	UNIT OF MEASURE:	UNIT PRICE	UNIT PRICE EXTENSION *(Quantity times Unit Price)*
204-02-00100	60	EACH		

DESCRIPTION:	TEMPORARY SEDIMENT CHECK DAMS (HAY)			
REF. NO.	QUANTITY:	UNIT OF MEASURE:	UNIT PRICE	UNIT PRICE EXTENSION *(Quantity times Unit Price)*
204-05-00100	15	EACH		

Wording for "DESCRIPTION" is to be provided by the Owner.
All quantities are estimated. The contractor will be paid based upon actual quantities as verified by the Owner

LOUISIANA UNIFORM PUBLIC WORK BID FORM
UNIT PRICE FORM

TO: Ascension Parish Government
42077 Churchpoint Road
Gonzales, Louisiana 70737

BID FOR: Parish Road 929 @ LA 930 Roundabout
MA-22-05

UNIT PRICES: This form shall be used for any and all work required by the Bidding Documents and described as unit prices. Amounts shall be stated in figures and only in figures.

DESCRIPTION:	TEMPORARY SILT FENCING			
REF. NO.	QUANTITY:	UNIT OF MEASURE:	UNIT PRICE	UNIT PRICE EXTENSION *(Quantity times Unit Price)*
204-06-00100	1897	LNFT		

DESCRIPTION:	CLASS II BASE COURSE (CRUSHED STONE)			
REF. NO.	QUANTITY:	UNIT OF MEASURE:	UNIT PRICE	UNIT PRICE EXTENSION *(Quantity times Unit Price)*
302-01-00300	8	CUYD		

DESCRIPTION:	CLASS II BASE COURSE (CRUSHED STONE)			
REF. NO.	QUANTITY:	UNIT OF MEASURE:	UNIT PRICE	UNIT PRICE EXTENSION *(Quantity times Unit Price)*
302-01-00300	678	CUYD		

DESCRIPTION:	CLASS II BASE COURSE (12” THICK) (SOIL CEMENT)			
REF. NO.	QUANTITY:	UNIT OF MEASURE:	UNIT PRICE	UNIT PRICE EXTENSION *(Quantity times Unit Price)*
302-02-12020	1093.2	SQYD		

Wording for “DESCRIPTION” is to be provided by the Owner.
All quantities are estimated. The contractor will be paid based upon actual quantities as verified by the Owner

LOUISIANA UNIFORM PUBLIC WORK BID FORM
UNIT PRICE FORM

TO: Ascension Parish Government
42077 Churchpoint Road
Gonzales, Louisiana 70737

BID FOR: Parish Road 929 @ LA 930 Roundabout
MA-22-05

UNIT PRICES: This form shall be used for any and all work required by the Bidding Documents and described as unit prices. Amounts shall be stated in figures and only in figures.

DESCRIPTION:	AGGREGATE SURFACE COURSE (NET SECTION)			
REF. NO.	QUANTITY:	UNIT OF MEASURE:	UNIT PRICE	UNIT PRICE EXTENSION *(Quantity times Unit Price)*
401-01-00100	24.7	CUYD		

DESCRIPTION:	ASPHALT CONCRETE			
REF. NO.	QUANTITY:	UNIT OF MEASURE:	UNIT PRICE	UNIT PRICE EXTENSION *(Quantity times Unit Price)*
502-01-00100	759.3	TON		

DESCRIPTION:	MILLING ASPHALT PAVEMENT			
REF. NO.	QUANTITY:	UNIT OF MEASURE:	UNIT PRICE	UNIT PRICE EXTENSION *(Quantity times Unit Price)*
509-01-00100	2974	SQYD		

DESCRIPTION:	STORM DRAIN PIPE (18" RCP)			
REF. NO.	QUANTITY:	UNIT OF MEASURE:	UNIT PRICE	UNIT PRICE EXTENSION *(Quantity times Unit Price)*
701-03-01021	34	LNFT		

DESCRIPTION:	STORM DRAIN PIPE ARCH (24" RCPA)			
REF. NO.	QUANTITY:	UNIT OF MEASURE:	UNIT PRICE	UNIT PRICE EXTENSION *(Quantity times Unit Price)*
701-04-01040	78	LNFT		

Wording for "DESCRIPTION" is to be provided by the Owner.
All quantities are estimated. The contractor will be paid based upon actual quantities as verified by the Owner

LOUISIANA UNIFORM PUBLIC WORK BID FORM
UNIT PRICE FORM

TO: Ascension Parish Government
42077 Churchpoint Road
Gonzales, Louisiana 70737

BID FOR: Parish Road 929 @ LA 930 Roundabout
MA-22-05

UNIT PRICES: This form shall be used for any and all work required by the Bidding Documents and described as unit prices. Amounts shall be stated in figures and only in figures.

DESCRIPTION:	TEMPORARY SIGNS AND BARRICADES			
REF. NO.	QUANTITY:	UNIT OF MEASURE:	UNIT PRICE	UNIT PRICE EXTENSION *(Quantity times Unit Price)*
713-01-00100	1.0	LUMP		

DESCRIPTION:	TEMPORARY PAVEMENT MARKINGS (4" WIDTH)			
REF. NO.	QUANTITY:	UNIT OF MEASURE:	UNIT PRICE	UNIT PRICE EXTENSION *(Quantity times Unit Price)*
713-02-00100	3900	LNFT		

DESCRIPTION:	TEMPORARY RAISED REFLECTORIZED PAVEMENT MARKERS			
REF. NO.	QUANTITY:	UNIT OF MEASURE:	UNIT PRICE	UNIT PRICE EXTENSION *(Quantity times Unit Price)*
713-06-00100	49	EACH		

DESCRIPTION:	MOBILIZATION			
REF. NO.	QUANTITY:	UNIT OF MEASURE:	UNIT PRICE	UNIT PRICE EXTENSION *(Quantity times Unit Price)*
727-01-00100	1.0	LUMP		

DESCRIPTION:	REFLECTORIZED RAISED PAVEMENT MARKERS (YELLOW/YELLOW)			
REF. NO.	QUANTITY:	UNIT OF MEASURE:	UNIT PRICE	UNIT PRICE EXTENSION *(Quantity times Unit Price)*
731-02-00100	140	EACH		

Wording for "DESCRIPTION" is to be provided by the Owner.
All quantities are estimated. The contractor will be paid based upon actual quantities as verified by the Owner

LOUISIANA UNIFORM PUBLIC WORK BID FORM
UNIT PRICE FORM

TO: Ascension Parish Government
42077 Churchpoint Road
Gonzales, Louisiana 70737

BID FOR: Parish Road 929 @ LA 930 Roundabout
MA-22-05

UNIT PRICES: This form shall be used for any and all work required by the Bidding Documents and described as unit prices. Amounts shall be stated in figures and only in figures.

DESCRIPTION:	REFLECTORIZED RAISED PAVEMENT MARKERS (WHITE/RED)			
REF. NO.	QUANTITY:	UNIT OF MEASURE:	UNIT PRICE	UNIT PRICE EXTENSION *(Quantity times Unit Price)*
731-02-00100	50	EACH		

DESCRIPTION:	PLASTIC PAVEMENT STRIPING (SOLID LINE) (24" WIDTH) (THERMOPLASTIC 90 MIL)			
REF. NO.	QUANTITY:	UNIT OF MEASURE:	UNIT PRICE	UNIT PRICE EXTENSION *(Quantity times Unit Price)*
732-01-01080	26	LNFT		

DESCRIPTION:	PLASTIC PAVEMENT STRIPING (SOLID LINE) (4" WIDTH) (THERMOPLASTIC 90 ML)			
REF. NO.	QUANTITY:	UNIT OF MEASURE:	UNIT PRICE	UNIT PRICE EXTENSION *(Quantity times Unit Price)*
732-02-02000	0.810	MILE		

DESCRIPTION:	PLASTIC PAVEMENT STRIPING (SOLID LINE) (8" WIDTH) (THERMOPLASTIC 90 ML)			
REF. NO.	QUANTITY:	UNIT OF MEASURE:	UNIT PRICE	UNIT PRICE EXTENSION *(Quantity times Unit Price)*
732-02-02040	0.161	MILE		

DESCRIPTION:	PLASTIC PAVEMENT STRIPING (DOTTED LINE) (8" WIDTH) (2' L)(THERMOPLASTIC 90 ML)			
REF. NO.	QUANTITY:	UNIT OF MEASURE:	UNIT PRICE	UNIT PRICE EXTENSION *(Quantity times Unit Price)*
732-03-02030	0.042	MILE		

DESCRIPTION:	PLASTIC PAVEMENT LEGENDS AND SYMBOLS (ARROW – LEFT TURN)			
REF. NO.	QUANTITY:	UNIT OF MEASURE:	UNIT PRICE	UNIT PRICE EXTENSION *(Quantity times Unit Price)*
732-04-01080	2	EACH		

Wording for "DESCRIPTION" is to be provided by the Owner.
All quantities are estimated. The contractor will be paid based upon actual quantities as verified by the Owner

LOUISIANA UNIFORM PUBLIC WORK BID FORM
UNIT PRICE FORM

TO: Ascension Parish Government
42077 Churchpoint Road
Gonzales, Louisiana 70737

BID FOR: Parish Road 929 @ LA 930 Roundabout
MA-22-05

UNIT PRICES: This form shall be used for any and all work required by the Bidding Documents and described as unit prices. Amounts shall be stated in figures and only in figures.

DESCRIPTION:	MAILBOXES			
REF. NO.	QUANTITY:	UNIT OF MEASURE:	UNIT PRICE	UNIT PRICE EXTENSION *(Quantity times Unit Price)*
735-01-00100	4	EACH		

DESCRIPTION:	MAILBOX SUPPORTS (SINGLE)			
REF. NO.	QUANTITY:	UNIT OF MEASURE:	UNIT PRICE	UNIT PRICE EXTENSION *(Quantity times Unit Price)*
735-02-00100	4	EACH		

DESCRIPTION:	HYDRO-SEEDING			
REF. NO.	QUANTITY:	UNIT OF MEASURE:	UNIT PRICE	UNIT PRICE EXTENSION *(Quantity times Unit Price)*
739-01-00100	0.562	ACRE		

DESCRIPTION:	CONSTRUCTION LAYOUT			
REF. NO.	QUANTITY:	UNIT OF MEASURE:	UNIT PRICE	UNIT PRICE EXTENSION *(Quantity times Unit Price)*
740-01-00100	1.0	LUMP		

DESCRIPTION:	SAW CUTTING ASPHALTIC CONCRETE PAVEMENT			
REF. NO.	QUANTITY:	UNIT OF MEASURE:	UNIT PRICE	UNIT PRICE EXTENSION *(Quantity times Unit Price)*
NS-500-00340	35541	INFT		

Wording for "DESCRIPTION" is to be provided by the Owner.
All quantities are estimated. The contractor will be paid based upon actual quantities as verified by the Owner

LOUISIANA UNIFORM PUBLIC WORK BID FORM
UNIT PRICE FORM

TO: Ascension Parish Government
42077 Churchpoint Road
Gonzales, Louisiana 70737

BID FOR: Parish Road 929 @ LA 930 Roundabout
MA-22-05

UNIT PRICES: This form shall be used for any and all work required by the Bidding Documents and described as unit prices. Amounts shall be stated in figures and only in figures.

DESCRIPTION:	SWPPP			
REF. NO.	QUANTITY:	UNIT OF MEASURE:	UNIT PRICE	UNIT PRICE EXTENSION *(Quantity times Unit Price)*
S-001	1.0	LUMP		

Wording for "DESCRIPTION" is to be provided by the Owner.
All quantities are estimated. The contractor will be paid based upon actual quantities as verified by the Owner

BID BOND FORM

FOR

LA 44 at Parker Road / LA 933 Turn Lane

MA-22-05

Date: _____

KNOW ALL MEN BY THESE PRESENTS:

That _____ of _____, as Principal, and, _____ as Surety, are held and firmly bound unto the _____ (Obligee), in the full and just sum of five (5%) percent of the total amount of this bid, including all alternates, lawful money of the United States, for payment of which sum, well and truly be made, we bind ourselves, our heirs, executors, administrators, successors and assigns, jointly and severally firmly by these presents.

Surety represents that it is listed on the current U. S. Department of the Treasury Financial Management Service list of approved bonding companies as approved for an amount equal to or greater that the amount for which it obligates itself in this instrument or that it is a Louisiana domiciled insurance company with at least an A - rating in the latest printing of the A. M. Best's Key Rating Guide. If surety qualifies by virtue of its Best's listing, the Bond amount may not exceed ten percent of policyholders' surplus as shown in the latest A. M. Best's Key Rating Guide.

Surety further represents that it is licensed to do business in the State of Louisiana and that this Bond is signed by surety's agent or attorney-in-fact. This Bid Bond is accompanied by appropriate power of attorney.

THE CONDITION OF THIS OBLIGATION IS SUCH that, whereas said Principal is herewith submitting its proposal to the Obligee on a Contract for:

_____

NOW, THEREFORE, if the said Contract be awarded to the Principal and the Principal shall, within such time as may be specified, enter into the Contract in writing and give a good and sufficient bond to secure the performance of the terms and conditions of the Contract with surety acceptable to the Obligee, then this obligation shall be void; otherwise this obligation shall become due and payable.

_____	_____
PRINCIPAL (BIDDER)	SURETY
BY: _____	BY:_____
AUTHORIZED OFFICER-OWNER-PARTNER	AGENT OR ATTORNEY-IN-FACT(SEAL)

BIDDERS'S NON - COLLUSION AFFIDAVIT

(FURNISH WITH BID PACKAGE)

STATE OF LOUISIANA
PARISH OF ASCENSION

Before me, the undersigned authority, personally came and appeared

_____, who after being by me duly sworn, deposed and said that he is the

_____, and duly authorized representative of the firm of

_____, (Herein after referred to as "BIDDER") the party who

submitted a bid for _____

which bid was received by ASCENSION PARISH, on _____ and said affiant further

said:

1. That bidder employed no person, corporation, firm, asocial, or other organization either directly or indirectly, to secure public contract under which he received payment, other than persons regularly employed by the affiant whose services in connection with the construction, alteration, of demolition of the public building or project or in securing the public contract were in the regular course of their duties for bidder, and

2. That no part of the contract price received by bidder was paid or will be paid to any person, corporation, firm, association, or other organization for soliciting the contract, other than the payment of their normal compensation to persons regularly employed by the affiant whose services in connection with the construction, alteration, or demolition of the public building or project were in the regular course of their duties for bidder.

3. Said bidder is genuine and the bidder has not colluded, conspired or agreed directly or indirectly with any other bidder to offer a sham or collusive bid.

4. Said bidder has not in any manner directly or indirectly agreed with any other person to fix the bid price of affiant or any other bidder, or to fix any overhead profit or cost element of said bid price, of that of any other bidder, or to induce any other person to refrain from bidding.

5. Said bid is not intended to secure an unfair advantage of benefit from Ascension Parish, Louisiana or in favor of any persons interested in the proposed contract.

6. All statements contained in said bid are true and correct.

7. Neither affiant nor any member of his company has divulged information regarding said bid or any data relative thereto to any person, firm, or corporation.

By: _____
(Signature)

_____
(Type or Print Name)

_____
(Type or Print Title)

SWORN TO AND SUBSCRIBED BEFORE ME, This _____ day of _____, 2020.

By: _____
Notary Public

RESOLUTION AUTHORIZING SUBMISSION OF BID, SIGNATURE OF BID AND SIGNATURE OF CONTRACT

BE IT RESOLVED by the Board of Directors of _____ Corporation organized and existing under the laws of the State of _____, and domiciled in the City of _____, that _____ President of the Corporation and/or _____ of the Corporation, be and are hereby authorized and empowered to submit bids and to execute any and all contracts of whatever kind on behalf of the Corporation and to do all things necessary in the premise's.

CERTIFICATE

I, _____, Secretary of _____ do hereby certify that the foregoing resolution is a true and exact copy unanimously adopted by the Board of Directors of said Corporation at a meeting thereof legally held on the _____ day of _____, 20_____, that said resolution is duly entered into the records of said Corporation; that it has not been rescinded or modified; and that it is now in full force and effect.

IN TESTIMONY WHEREOF, I have hereunto set my hand and the seal of said Corporation this _____ day of _____, 20_____.

_____

SECRETARY

PERFORMANCE BOND

_____ as Principal, and _____ a surety company or companies authorized to do business in Louisiana, as Surety, are bound, in solido, unto _____ an unto all subcontractors, workmen, and finishers of materials and equipment, jointly in the sum of _____ dollars ($_____).

Payable and lawful money of the United States, and to this bond do obligate their heirs, successors and assigns. In the case of co-sureties, co-sureties assume and obligation in the sum of_____ dollars ($_____).

For _____ and _____ dollars ($_____).

The consideration for this bond is such, that if the Principal shall perform this contract, made and entered into on the _____ day of _____, 20_____, to construct the project entitled:

LA 44 at Parker Road / LA 933 Turn Lane, MA-22-05, consisting of clearing, grubbing, earthwork, grading, base course, drainage, asphalt concrete pavement, striping, signing, and lighting operations according to the stipulations in said contract attached hereto and made a part thereof, at the time and in the manner and for specified; perform all labor and work; and shall furnish all materials as specified in said contract, and the drawings and specifications thereto attached and made a part thereof, this obligation shall be void; otherwise to remain in effect.

It is agreed by the parties that this bond is given in accordance with Louisiana Revised Statues of 1950, Title 38, Chapter 10.

In faith whereof, we have subscribed this obligation at _____, Louisiana.

Witness our hands and seals, this _____ day of _____, 20_____.

WITNESSES

_____ _____

Principal

_____ By _____

_____

(Typed or Printed Name)

_____ _____

First Surety

_____ By _____

Attorney in Fact

_____

(Typed or Printed Name)

_____ _____

Second Surety

_____ By _____

Attorney in Fact

_____

(Typed or Printed Name)

I certify that I am as of the date of this bond a licensed Resident Agent of Louisiana in good standing with the Louisiana Insurance Commission and authorized to countersign this bond on behalf of the Surety of Sureties.

First Surety	Second Surety
By_____	By_____
_____	_____
(Typed or Printed Name)	(Typed or Printed Name)
_____	_____
(Typed or Printed Name)	(Typed or Printed Name)
_____	_____
Address	Address

PAYMENT BOND FORM

_____

_____

as Principal, and

a surety company or companies authorized to do business in Louisiana, as Surety, are

bound, in solido, unto _____

_____ and unto all subcontractors, workmen, and furnishers of materials and equipment, jointly

in the sum of _____

_____Dollars ($_____).

Payable in lawful money of the United States, and to this bond do obligate their heirs, successors and assigns. In the case of co-sureties, co-sureties assume an obligation in the sum of

_____

_____Dollars ($_____).

For and

_____Dollars ($_____).

The consideration for this bond is such, that if the Principal shall perform this contract, made and entered into on the_____day of_____, 20_____, To construct the project entitled:

LA 44 at Parker Road / LA 933 Turn Lane

It is agreed by the parties that this bond is given in accordance with Louisiana Revised Statutes of 1950, Title 38, Chapter 10.

Witness our hands and seals, this_____day of_____, 20_____.

Witnesses

_____ _____
Principal

_____ By_____

_____
Typed or Printed Name

_____ _____
First Surety

_____ By_____(Seal)
Attorney-in-Fact

_____
Typed or Printed Name Second

_____ _____
Surety

_____ By_____(Seal)
Attorney-in-Fact

_____
Typed or Printed Name

I certify that I am as of the date of this bond a licensed Resident Agent of Louisiana in good standing with the Louisiana Insurance Commission and authorized to countersign this bond on behalf of the Surety of Sureties.

First Surety	Second Surety
By_____	By_____
_____	_____
Typed or Printed Name	Typed or Printed Name
_____	_____
Typed or Printed Name	Typed or Printed Name
_____	_____
Address	Address

HOLD HARMLESS AGREEMENT

OWNER: **PARISH OF ASCENSION**
P. O. BOX 1659
GONZALES, LOUISIANA 70707-1659

ENGINEER: **McKim & Creed**
1022 S. Purpera Ave
Gonzales, LA 70737

The Contractor shall indemnify and hold harmless the Owner and the Engineers and their agents and employees from and against all claims, damages, losses and expenses including attorney's fees arising out of or resulting from the performance of the work, provided that any such claim, damage, loss or expense: (a) is attributable to bodily injury, sickness, disease or death, or to injury to or destruction of tangible property (other than the work itself), including the loss of use resulting therefrom: and (b) is caused in whole or in part by any negligent act or omission of the Contractor, and subcontractor, anyone directly or indirectly employed by any of them or anyone for whose acts any of them may be liable, regardless of whether or not is caused in part by a party indemnified hereunder.

In any and all claims against the Owner or the Engineers, or any of their agents or employees by any employee of the Contractor, and subcontractor, anyone directly or indirectly employed by any of them or anyone for whose acts any of them may liable, the indemnification obligation under this Agreement shall not be limited in any way by any limitation on the amount or type of damages, compensation or benefits payable by or for the Contractor or any subcontractor under Workmen's Compensation acts, disability benefit acts or other employee benefit acts.

The obligations of the Contractor under this Agreement shall not extend to the liability of the Engineers, their agents or employees arising out of. (1) the preparation or approval of maps, drawings, opinions, reports, surveys, Change Orders, designs or specifications: or (2) the giving of or the failure to give directions or instructions by the Engineers, their agents or employees provided such giving or failure to give its primary cause of the injury or damage.

CONTRACTOR

_____

By:_____

WITNESSES

_____

_____

PART 4 - CONTRACT FORMS

NOTICE OF AWARD

Date of Award: _____

To: _____

Address: _____

_____

PROJECT: LA 44 AT PARKER ROAD / LA 933 TURN LANE

Owner's Contract Number:

Engineer's Project Number: MA-22-05

Contract for: LA 44 AT PARKER ROAD / LA 933 TURN LANE, MA-22-05

FISCAL YEAR 2021

ASCENSION PARISH

You are hereby notified that your Bid dated _____ for the above contract has been considered. You are the apparent Successful Bidder and have been awarded a Contract for: LA 44 AT PARKER ROAD / LA 933 TURN LANE; MA-22-05 (FISCAL YEAR 2021 ASCENSION PARISH).

The Contract Price of your Contract is: _____

_____Copies of each of the proposed Contracts accompany this Notice of Award

_____Sets of the complete Contract Documents, including Drawings, will be delivered separate during the Preconstruction Conference or otherwise made available to you immediately.

You must comply with the following conditions precedent within fifteen (15) days of the date of this Notice of Award, this is by:

A. You must deliver to the Owner four (4) fully executed counterparts of the proposed Contract, including the Agreement. Each copy of the Contract must bear your signature on all signatory lines within the Agreement.
B. You must deliver with the executed Agreement, the Contract Security (Bonds) as specified in the Instructions to Bidders (Division 0—Article 2) and General Conditions (Division 1—Article 5).
C. You must deliver with the executed Agreement, Certificate of Insurance including certificates verifying additional insurers as required in the General Conditions (Division 1—Article 5).

D. Failure to comply with these conditions within the time specified will entitle the Owner to consider your bid in default, to annul this Notice of Award, and to declare your Bid Security forfeited.

E. Within ten (10) days after you comply with the above conditions, the Owner will return to you one (1) fully signed counterpart of the Agreement with the Contract Documents attached.

PARISH OF ASCENSION

By:_____

(Authorized Signature)

_____

(Title)

ACCEPTANCE OF AWARD

_____

(Contractor)

By:_____

(Authorized Signature)

_____

(Title)

_____

(Date)

NOTICE TO PROCEED

TO: _____

ADDRESS: _____

_____

PROJECT: LA 44 AT PARKER ROAD / LA 933 TURN LANE

Owner's Contract Number:

Engineer's Project Number: MA-22-05

Contract for: LA 44 AT PARKER ROAD / LA 933 TURN LANE; MA-22-05

FISCAL YEAR 2021

ASCENSION PARISH

You are notified that the Contract Times under the above Contract will commence to run on _____. By that date, you are to start performing your obligations under the Contract Documents. In accordance with Paragraph 3 of the Agreement, the dates of Substantial Completion and completion and readiness for Final Payment are:

_____ and _____

Before you may start any Work at the site, Article 2.1 of the General Conditions provides that you and the Owner must each deliver to the other (with copies to the Engineer) and other identified additional insurers) certificates of insurance which each is required to purchase and maintain in accordance with the Contract Documents.

Also, before you may start any Work at the site you must notify Owner/Engineer of Start Date.

PARISH OF ASCENSION

By:_____

(Authorized Signature)

_____

(Title)

ACKNOWLEDGED:

_____

(Contractor)

By:_____

(Authorized Signature)

_____

(Title)

_____

(Date)

APPLICATION FOR PAYMENT

NO.: _____

TO: _____

_____

PROJECT: LA 44 AT PARKER ROAD / LA 933 TURN LANE

Owner's Contract Number:

Engineer's Project Number: MA-22-05

Contract for: LA 44 AT PARKER ROAD / LA 933 TURN LANE; MA-22-05

FISCAL YEAR 2021

ASCENSION PARISH

For work accomplished through the date of: _____.

ITEM	CONTRACTOR'S SCHEDULE OF			WORK COMPLETED	
	UNIT PRICE	QUANTITY	AMOUNT	QUANTITY	AMOUNT
ITEM	$0.00	0	$0.00	0	$0.00
ITEM	$0.00	0	$0.00	0	$0.00
ITEM	$0.00	0	$0.00	0	$0.00
ITEM	$0.00	0	$0.00	0	$0.00
ITEM	$0.00	0	$0.00	0	$0.00
ITEM	$0.00	0	$0.00	0	$0.00
ITEM	$0.00	0	$0.00	0	$0.00
TOTALS:			$0.00		$0.00

Accompanying Documents Gross Amount Due: $_____

_____Less X% Retainage $_____

_____Amount Due to Date: $_____

_____Less Previous Payments: $_____

_____Amount Due This Application: $_____

CONTRACTOR CERTIFICATION:

The undersigned CONTRACTOR certifies that (1) all previous progress payments received from OWNER on account of Work done under the Contract referred to above have been applied to discharge in full all obligations of CONTRACTOR incurred in connection with Work covered by prior Applications for Payment numbered _____ through _____ inclusive; (2) title to all Work materials and equipment incorporated in said Work or otherwise listed in or covered by this Application for Payment will pass to OWNER ant the time payment free and clear of all liens, claims, security interest and encumbrances (except such as are covered by Bond acceptance to Owner indemnifying Owner against any such lien, claim, security interest or encumbrance); and (3) all Work covered by this Application for Payment is in accordance with the Contract Documents and not defective as that term is defined in the Contract Documents.

DATED: _____

_____

CONTRACTOR

By:_____

(Authorized Signature)

Payment of the above AMOUNT DUE THIS APPLICATION is recommended.

DATED: _____

_____

ENGINEER

By:_____

(Authorized Signature)

WORK CHANGE DIRECTIVE

NO.: _____

PROJECT:	LA 44 AT PARKER ROAD / LA 933 TURN LANE; MA-22-05
DATE OF ISSUANCE:	
EFFECTIVE DATE:	

OWNER:	PARISH OF ASCENSION
OWNER'S CONTRACT NO.:	
ENGINEER:	McKim & Creed
ENGINEER CONTRACT NO.:	
CONTRACTOR:	

You are directed to make the following changes in the Contract Documents:

DESCRIPTION:

PURPOSE OF WORK DIRECTIVE:

ATTACHMENTS (List documents supporting changes):

If a claim is made that the above change(s) have affected the Contract Price or Contract Times, any claim for a change order based thereon will involve one or more of the following methods of determining the effect of the change(s).

Method of determining change in Contract Price:

_____Unit Prices

_____Lump Sum

_____Other:_____

Method of determining change in Contract Time:

_____Contractor's Records

_____Engineer's Records

_____Other_____

NET TO CONTRACT AMOUNT: $_____

NET TO CONTRACT TIME: _____days

NEW DATE OF COMPLETION:

If the change involves an increase in Contract Price or Contract Times, the estimated amount is not to be exceeded without further authorization.

RECOMMENDED: By:_____
Date:_____

ENGINEER (Authorized Signature)

APPROVED: By:_____
Date:_____

OWNER (Authorized Signature)

ACCEPTED: By:_____
Date:_____

CONTRACTOR (Authorized Signature)

CHANGE ORDER

CHANGE ORDER NO.: _____

PROJECT: LA 44 AT PARKER ROAD / LA 933 TURN LANE, MA-22-05

DATE OF ISSUANCE:

EFFECTIVE DATE:

OWNER: PARISH OF ASCENSION

OWNER'S CONTRACT NO.:

ENGINEER: McKim & Creed

ENGINEER CONTRACT NO.:

CONTRACTOR:

It is hereby mutually agreed that when this Change Order has been signed by the contracting parties, the following described changes in the work required by the Contract except as herein stipulated and agreed.

DESCRIPTION:

SPECIFICATIONS:

TIME:

SCOPE AND JUSTIFICATION OF CHANGES:

ITEM NO.	ITEM	UNIT PRICE	CHANGE		CURRENT QUANTITY	REVISED QUANTITY	% CHANGE
			QUANT.	AMOUNT			
000-00-000	ITEM DESCRIPTION	$		$			$

STATEMENT OF CONTRACT AMOUNT

ORIGINAL CONTRACT AMOUNT:	$
PREVIOUS ADDITIONS:	$
PREVIOUS DEDUCTIONS:	$
NET CONTRACT AMOUNT PRIOR TO THIS CHANGE:	$
AMOUNT OF THIS CHANGE:	$
CONTRACT AMOUNT TO DATE:	$

NET TO CONTRACT TIME: _____days

NEW DATE OF COMPLETION:

CONTRACTOR'S PROPOSAL FOR THE ABOVE DESCRIBED CHANGES

I/We hereby agree to the modification of the Contract as described above and agree to furnish all materials, equipment and labor necessary to perform all work in connection therewith in accordance with the requirements for similar work in the existing Contract except as otherwise stipulated herein, for the following consideration.

PROPOSED: By:_____
Date:_____
CONTRACTOR (Authorized Signature)

RECOMMENDED: By:_____
Date:_____
ENGINEER (Authorized Signature)

APPROVED: By:_____
Date:_____
ASCENSION PARISH GOVERNMENT
(Authorized Signature)

APPROVED: By:_____
Date:_____
PARISH PRESIDENT (Authorized Signature)

CERTIFICATE OF SUBSTANTIAL COMPLETION

PROJECT: LA 44 AT PARKER ROAD / LA 933 TURN LANE, MA-22-05

OWNER: PARISH OF ASCENSION

OWNER'S CONTRACT NO.:

ENGINEER: McKim & Creed

ENGINEER CONTRACT NO.:

CONTRACTOR:

This [TENTATIVE]/[DEFINITIVE] Certificate of Substantial Completion applies to:

_____All Work under the Contract Documents.

-OR-

_____The following specified portions of the Work:

_____

Date of Substantial Completion

The Work to which this Certificate applies has been inspected by authorized representatives of Owner, Contractor, and Engineer, and found to be substantially complete. The Date of Substantial Completion of the Project or portion thereof designated above is hereby declared and is also the date of commencement of applicable warranties required by the Contract Documents, except as stated below:

A [TENTATIVE]/[DEFINITIVE] list of items to be completed or corrected is attached hereto. This list may not be all inclusive, and the failure to include any items on such list does not alter the responsibility of the Contractor to complete all Work in accordance with the Contract Documents.

The responsibilities between Owner and Contractor for security, operation, safety, maintenance, heat, utilities, insurance and warranties shall be as provided in the Contract Documents except as amended as follows:

_____Amended Responsibilities _____Not Amended Responsibilities

Owner's Amended Responsibilities:

Contractor's Amended Responsibilities:

The following documents are attached to and made part of this Certificate of Substantial Completion:

This certificate does not constitute an acceptance of Work not in accordance with the Contract Documents nor is it a release of Contractor's obligation to complete the Work in accordance with the Contract Documents:

EXECUTED: By:_____
Date:_____

ENGINEER

(Authorized Signature)

ACCEPTED: By:_____
Date:_____

CONTRACTOR

(Authorized Signature)

ACCEPTED: By:_____
Date:_____

OWNER

(Authorized Signature)

TECHNICAL SPECIFICATIONS AND SPECIAL CONDITIONS TO THE CONSTRUCTION CONTRACT

Technical Specifications

The Technical Specifications for this project shall consist of the Louisiana Standard Specifications for Roads and Bridges, 2016 Edition (LSSRB), State of Louisiana, Department of Transportation and Development, Baton Rouge, Louisiana. The unit price pay items included in this project are numbered in accordance with the 2016 Edition of the Louisiana Department of Transportation and Development Standard Specifications for Roads and Bridges and all work included in these pay items shall be constructed in strict conformance with the appropriate Sections, Sub-sections, and references made within the LSSRB including any current revisions to which as published by the Louisiana Department of Transportation and Development and/or as modified, supplemented, or added to which herein.

Specifications including materials, equipment, prosecution of the work, payment, procedures, testing, sampling, quality assurance, and quality control items shall conform to the LSSRB and the latest revised Supplemental Specifications to which unless explicitly amended the Special Provisions. All materials supplied shall be listed on and comply with the latest revised Approved Materials List maintained by the Louisiana Department of Transportation and Development at the time of bidding, unless otherwise noted. Payment and measurement will be based on the item and unit measure specified in the LSSRB, or as amended otherwise within this document.

Supplemental Conditions

These Special Provisions amend or supplement the Louisiana Standard Specifications for Roads and Bridges, State of Louisiana Department of Transportation and Development, 2016 Edition. All provisions which are not so amended or supplemented remain in full force and effect.

The terms used in these Special Provisions have the meanings stated in the Louisiana Standard Specifications for Roads and Bridges. Additional terms used in these Special Provisions have the meanings stated below, which are applicable to both the singular and plural thereof.

Any wording in the above noted Louisiana Standard Specifications for Roads and Bridges, 2016 Edition (LSSRB) as may refer to the Governor, State, State Highway Department, Department, Director, Owner, or similar references to other personnel or to sections, departments, and agencies included thereof shall be deemed to read "Ascension Parish Government" and its authorized personnel, agents, departments and sections.

Any wording in the above noted Louisiana Standard Specifications for Roads and Bridges, 2016 Edition (LSSRB) that may refer to the Engineer, Project Engineer, Chief Engineer, or similar references to similar personnel or to sections under the direction thereof shall be deemed to read "**MCKIM & CREED**" and its authorized personnel and agents.

Any discrepancy, in whole or in part, between the Sections and/or Subsections not listed above,

which are said to remain in full effect, and Sections A thru F included in this document shall be resolved as follows:

(1) In accordance with applicable Local, State, or Federal laws
(2) In the best interest of the Owner as determined by the Owner and/or Engineer
(3) In accordance with the provisions stated with Sections A thru F of this document
(4) In accordance with the Engineer's recommendation

The following Sections and/or Subsections of the LSSRB have been deleted and the contents thereof are considered to be replaced and/or amended by the applicable parts of Sections A thru F of this document. Any Section of Subsection of the LSSRB not specifically listed below shall be considered to apply in full force as written in the LSSRB or as amended by the latest revised Supplemental Specifications to which as published by the LADOTD. The address system used in these Special Provisions is the same as the address system used in the Louisiana Standard Specification for Roads and Bridges, with the prefix "SC" added thereto.

SC-SECTION 102.03-04	Delete entire section.
SC-SECTION 102.06-13	Delete entire section.
SC-SECTION 103.02-08	Delete entire section.
SC-SECTION 104.02-05	Delete entire section.
SC-SECTION 105.17-19	Delete entire section.
SC-SECTION 106.02	Delete entire section.
SC-SECTION 106.05	Delete entire section.
SC-SECTION 107.02	Delete entire section.
SC-SECTION 107.13-14	Delete PART 1 – GENERAL PROVISIONS in its entirety except for Sections 109 "Measurement and Payment", 107.13 "Forest Protection", and 107.14 "Environmental Protection". Replace with General Conditions included in these documents herewith.
SC-SECTION 108.01	Delete entire section.
SC-SECTION 108.03-04	Delete entire section.
SC-SECTION 108.07-11	Delete entire section.
SC-SECTION 109.03-08	Delete entire section.

SC-SECTION 201.04	Delete second Paragraph in its entirety.
SC-SECTION 202.01	Delete last line in Paragraph 4 "If structures or obstructions are encountered which differ materially from those ordinarily encountered, the provision of 105.18 shall apply.".
SC-SECTION 202.02	A. Delete eighth line in first Paragraph "When no storage sites are specified, deliver salvaged materials to the nearest DOTD maintenance unit." B. Delete second Paragraph in its entirety and replace with "If any fuel storage tanks or other environmentally sensitive or contaminated sites are located during construction, stop construction activity in the immediate vicinity of the environmentally sensitive or contaminated site and notify the Project Engineer." C. Delete last Paragraph in its entirety.
SC-SECTION 202.03.3	Delete last Paragraph in its entirety.
SC-SECTION 202.05	Delete in its entirety, and replace with the following "When removal or remediation of any environmentally sensitive or contaminated sites is required during construction, coordinate construction operations with the Project Engineer.".
SC-SECTION 202.05.1	Delete first Paragraph its entirety and replace with "When information is available, the plans will indicate which structures contain friable or non-friable asbestos. If a structure is identified to have asbestos, and is not shown on the plans, the Contractor should notify the Project Engineer. If asbestos removal is identified, a certified asbestos abatement contractor shall be used. Also, the Contractor shall notify the Department of Environmental Quality (DEQ), Air Quality Division, and follow all state requirements. The Contractor shall maintain and furnish all records pertaining to the disposal of the asbestos containing material within 21 calendar days of the material being removed from the site for disposal. Asbestos-containing materials in structures that are removed or relocated without disturbing asbestos will not be abated. Contractor shall provide a release to the Engineer.".
SC-SECTION 202.03.3	A. Delete first sentence in the first Paragraph in its entirety and replace with "Before removal, underground fuel tanks will be registered with the DEQ by the Contractor as abandoned underground storage tanks." B. Delete third sentence in first Paragraph in its entirety.

C. Delete fifth and six sentences in first Paragraph in its entirety and replace with "Submit closure test results, all documentation, and all necessary forms to the Engineer. The Contractor and/or the certified UST subcontractor shall be responsible for all contact and/or coordination with DEQ."

D. Delete third sentence in third Paragraph in its entirety.

E. Delete last sentence in third Paragraph in its entirety and replace with "Contract shall provide a copy of all laboratory analysis to the Engineer for verification prior to profiling materials for landfill acceptance.".

SC-SECTION 202.05.3

A. Delete "or as directed by the Materials and Testing Section" in the last sentence of the first Paragraph.

B. Delete last sentence in Paragraph 4 in its entirety.

SC-SECTION 202.05.4

Delete second and fifth Paragraphs in their entirety.

SC-SECTION 202.05.5

A. Delete fourth Paragraph in its entirety and replace with "The Contractor will be responsible for obtaining an approved disposal site, arranging for transporting the material and/all testing required."

B. Delete "to the Department" at the end of Paragraph 5.

SC-SECTION 202.05.6

Delete "Department" where indicated and replace with "Engineer"

SC-SECTION 202.08

A. Delete last sentence of item 3 in Paragraph 5.

B. Delete fifth sentence in Paragraph 9.

SAWCUTTING ASPHALT CONCRETE PAVEMENTS

I. EXECUTION

(A) GENERAL CONSTRUCTION REQUIREMENTS: Sawcuts shall be for the full depth of the pavement along the perimeter of the pavement to be removed as marked by the engineer. Sawcuts shall be made with a diamond bladed concrete saw for the full depth of the pavement.

II. MEASUREMENT:

(A) SAWCUTS: Design quantities will be based on the linear footage times the depth of the cut for all the saw cuts and will include all the labor and equipment required to do the work.

III. PAYMENT

(A) SAWCUTTING ASPHALT CONCRETE PAVEMENTS: Payment for the saw cuts will be made at the contract unit price under:

Item No.	**Pay Item Pay**	**Unit**
NS-500-00340	Saw Cutting Asphalt Concrete Pavements	Inch per Linear Foot

SPECIAL PROVISIONS OF THE CONSTRUCTION CONTRACT

SPECIAL PROVISIONS

These Special Provisions amend or supplement the Louisiana Standard Specifications for Roads and Bridges, State of Louisiana Department of Transportation and Development, 2016 Edition. All provisions which are not so amended or supplemented remain in full force and effect.

The terms used in these Special Provisions have the meanings stated in the 2016 Louisiana Standard Specifications for Roads and Bridges. Additional terms used in these Special Provisions have the meanings stated below, which are applicable to both the singular and plural thereof.

The address system used in these Special Provisions is the same as the address system used in the 2016 Louisiana Standard Specification for Roads and Bridges, with the prefix "SP" added thereto.

NOT USED

INDEX OF SHEETS

SHEET NO.	DESCRIPTION
1	COVER PAGE
2	GENERAL NOTES AND LEGEND
3	TYPICAL SECTIONS
3A	MISCELLANEOUS DETAILS
4	QUANTITY SHEET
5	SUMMARY OF ESTIMATED QUANTITIES
6-8	PLAN & PROFILES
9-10	PAVEMENT MARKINGS AND SIGNAGE
11	SUGGESTED EROSION CONTROL
12-13	SUGGESTED SEQUENCE OF CONSTRUCTION

SHEET NO.	STANDARD PLANS	REV. DATE
200-201	BM-01 (2 SHEETS)	11/16/21
202-203	EC-01 (2 SHEETS)	10/01/08
204-206	DW-01 (3 SHEETS)	08/04/22
207-208	MB-01 (2 SHEETS)	04/04/22
209-213	PED-01 (5 SHEETS)	07/21/22
214	PM-01	02/28/19
215	PM-02	02/28/19
216	PM-05	02/28/19
217	PM-06	02/28/19
218-234	RS-01 (17 SHEETS)	07/01/22
235-238	TTC-00(A-D) (4 SHEETS)	07/02/18
239	TTC-03	07/02/18
240	TTC-04	07/02/18
241	TTC-18	07/02/18
242	TTC-19	07/02/18

SHEET NO.	CROSS SECTIONS
400-404	CROSS SECTION SHEETS

TOTAL SHEETS = 62

PARISH OF ASCENSION
DEPARTMENT OF TRANSPORTATION AND ENGINEERING

MOVE ASCENSION PROGRAM

PROJECT NO. MA-22-05
100% FINAL DESIGN
FOR

LA HIGHWAY 44 AT PARKER RD. TEMPORARY TURN LANE

ASCENSION PARISH,
LOUISIANA

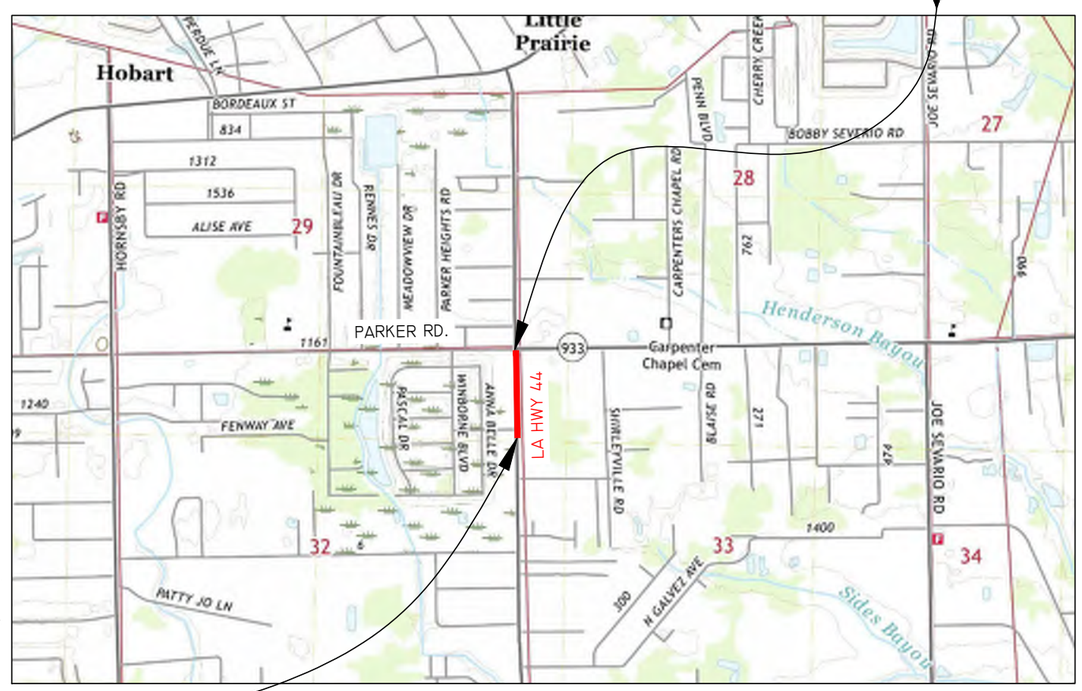

LAYOUT MAP

2000 0 2000 4000
SCALE IN FEET

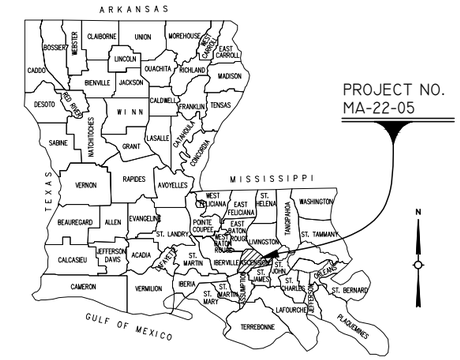

VICINITY MAP

PRESIDENT

CLINT COINTMENT

ASCENSION PARISH COUNCIL

DISTRICT 1	OLIVER JOSEPH
DISTRICT 2	JOEL ROBERT
DISTRICT 3	TRAVIS TURNER
DISTRICT 4	BRETT ARCENEAUX
DISTRICT 5	TODD VARNADO
DISTRICT 6	CHASE MELANCON
DISTRICT 7	BRIAN HILLENSBECK
DISTRICT 8	BLAINE PETITE
DISTRICT 9	PAM ALONSO
DISTRICT 10	DENNIS CULLEN
DISTRICT 11	MICHEAL MASON

RECOMMENDED FOR APPROVAL BY

CONSULTANT

DATE 6/19/2024

APPROVED

DANIEL HELMS

DATE

TRAFFIC DATA

2018-2020 A.A.D.T. = 10,839
DESIGN SPEED = 45/55 MPH
POSTED SPEED = 45/55 MPH
DESIGN CLASSIFICATION = URBAN COLLECTOR

SURVEY

VERTICAL DATUM USED: NAVD 88
HORIZONTAL DATUM USED NAVD 83
MAGNETIC VAR: NONE
BEARINGS ARE: GRID
TRANSIT BOOKS N/A

SCALES:

PLAN: 1" = 20'
PROFILE HORIZ: 1" = 20'
PROFILE VERT: 1" = 2'
SECTION HORIZ: 1" = 10'
SECTION VERT: 1" = 5'

TYPE OF CONSTRUCTION

ASPHALTIC CONCRETE PAVEMENT, GRADING, BASE COURSE DRAINAGE STRUCTURES, AND RELATED WORK.

NOTE:

THE 2016 OR LATEST EDITION OF THE LOUISIANA DOTD STANDARD SPECIFICATIONS FOR ROADS AND BRIDGES, AS AMENDED BY THE PROJECT SPECIFICATIONS, SHALL GOVERN ON THIS PROJECT.

LENGTH AND LOCATION OF WORK

CONTROL SECTION	STATION		LOGMILE		ALGEBRAIC SUM OF ALL EQUATIONS	GROSS LENGTH	EXCEPTION	BRIDGE LENGTH		ROADWAY LENGTH	
	BEGIN	END	BEGIN	END	FEET	FEET	FEET	FEET	MILES	FEET	MILES
N.A.	105+09.39	115+80.37	N.A.	N.A.	N.A.	1448	N.A.	N.A.	N.A.	1071	0.20
					TOTAL LENGTH OF BRIDGES						
					TOTAL LENGTH OF ROADWAY					1071	0.20
					TOTAL MILES						0.20

STATE OF LOUISIANA
DUSTIN J. MAYNARD
REG. No. 42123
REGISTERED
PROFESSIONAL ENGINEER
CIVIL ENGINEERING
6/19/2024

SHEET NUMBER 1

ASCENSION PARISH

PARISH	CONTROL SECTION	STATE PROJECT

DESIGNED	CHECKED	DETAILED	CHECKED	DATE	SHEET
SJT	DJM	SJT	DJM	JUNE 2024	COVER PAGE

NO.	DATE	BY

COVER PAGE

LA HWY 44 AT PARKER RD TEMPORARY TURN LANE

(225) 644-5523
www.mckimcreed.com
1022 S. Burpara Ave.
Gonzales, LA 70707-0298

<JHILARIO> 06/25/24 8:53 AM I:\08391\0009\ENG\80-DRAWINGS\TEMP TURN LANE DESIGN\1 - COVER PAGE.DWG - 1

GENERAL NOTES:

1. THE CONTRACTOR IS ADVISED THAT EXISTING OVERHEAD AND UNDERGROUND UTILITIES SUCH AS (BUT NOT LIMITED TO) ELECTRICAL LINE AND POLES, TELEPHONE CABLES, GAS LINES, WATER LINES, AND SANITARY SEWERS EXIST IN THE AREA WHERE THE PROPOSED IMPROVEMENTS ARE TO BE INSTALLED. THE CONTRACTOR SHALL CONTACT LA ONE CALL OR THE APPROPRIATE UTILITY COMPANY FOR THE LOCATION OF THEIR UNDERGROUND SERVICE A MINIMUM OF 48 HOURS PRIOR TO BEGINNING CONSTRUCTION IN THE WORK AREA AS IS REQUIRED BY THE LOUISIANA UNDERGROUND UTILITIES AND FACILITIES DAMAGE PREVENTION LAW (LARS 40:1749.11 THROUGH 1749.26, INCLUSIVE). IT SHALL BE THE CONTRACTOR'S SOLE RESPONSIBILITY TO LOCATE AND PROTECT EXISTING UTILITIES THAT HAVE BEEN PROPERLY MARKED DURING THE CONSTRUCTION OF THE CONTRACT. ANY DAMAGES TO PROPERLY MARKED EXISTING UTILITIES CAUSE BY EXECUTION OF THE CONTRACT, SHALL BE REPAIRED BY THE CONTRACTOR AT NO ADDITIONAL EXPENSE TO THE OWNER. THE OWNER DOES NOT ASSUME OR IMPLY TO ANY LIABILITY FOR PROPERLY MARKED EXISTING UTILITIES BELONGING TO OTHER UTILITY PROVIDERS THAT MAY OCCUPY OR OTHERWISE CONFLICT WITH THE CONSTRUCTION OF THE CONTRACT.
2. PRIOR TO WORK COMMENCEMENT, THE CONTRACTOR IS RESPONSIBLE FOR FINAL VERIFICATION OF THE LOCATION OF THE UTILITIES SHOWN ON THESE PLANS. THE CONTRACTOR SHALL CONTACT LA ONE CALL (811 OR 1-800-272-3020) AND CITY PARISH DEPARTMENT OF PUBLIC WORKS TO HAVE UTILITIES LOCATED PRIOR TO CONSTRUCTION. THE CONTRACTOR IS RESPONSIBLE FOR COORDINATING WITH THE UTILITY COMPANIES FOR ALL AREAS OF CONSTRUCTION.
3. CONTRACTOR SHALL COORDINATE ACTIVITIES SO THAT TRAFFIC IS TO BE MAINTAINED AT ALL TIMES ON ALL STREETS IN THIS CONTRACT DURING CONSTRUCTION. CONTRACTOR SHALL PROVIDE ALL TRAFFIC CONTROL PERSONNEL AND SIGNAGE IN ACCORDANCE WITH THE M.U.T.C.D. (LATEST EDITION). FOR THE SAFETY OF THE PUBLIC, BOTH LANES OF TRAFFIC ARE TO BE OPEN WHEN CONSTRUCTION IS NOT IN PROGRESS. THE CONTRACTOR SHALL PROVIDE SEQUENCE OF CONSTRUCTION DRAWINGS TO THE PROJECT ENGINEER FOR REVIEW PRIOR TO BEGINNING CONSTRUCTION.
4. WHENEVER NEW PAVING INTERSECTS OR MEETS EXISTING PAVING THAT IS TO REMAIN, THE NEW PAVING SHALL BE TRANSITIONED TO MATCH EXISTING PAVEMENT.
5. SAW CUTTING WILL BE REQUIRED WHEN REMOVING PART OF EXISTING ASPHALT OR CONCRETE STREETS, DRIVES, WALKS AND PARKING AREAS. SAW CUTS WILL BE FULL DEPTH TO THE BOTTOM OF EXISTING BASE.
6. THERE ARE A NUMBER OF OVERHEAD POWER LINES IN CLOSE PROXIMITY TO THIS PROJECT. SHOULD ANY POWER OR OTHER UTILITY POLES REQUIRE BRACING DURING THE COURSE OF CONSTRUCTION, THIS WORK WILL BE THE FULL RESPONSIBILITY OF THE CONTRACTOR AND SHALL BE PERFORMED AT NO ADDITIONAL PAY.
7. CONTRACTOR SHALL VERIFY EQUIPMENT CLEARANCE OF ALL OVERHEAD UTILITIES PRIOR TO CONSTRUCTION.
8. CONTRACTOR TO MAINTAIN MAILBOXES TO ALLOW FOR MAIL DELIVERY DURING CONSTRUCTION ACTIVITIES (NO DIRECT PAY). ANY MAILBOXES DAMAGED DURING CONSTRUCTION WILL BE REPLACED IN KIND, TO THE SATISFACTION OF THE OWNER (NO DIRECT PAY).
9. CONCRETE DRIVE AND CONCRETE WALK REMOVAL AND REPLACEMENT WILL BE TO THE R/W. IF REMOVAL IS REQUIRED BEYOND R/W, PERMISSION FROM PROPERTY OWNER IS TO BE ACQUIRED BY CONTRACTOR IN WRITING AND APPROVED BY PARISH PRIOR TO PLACEMENT.
10. THE CONTRACTOR IS ADVISED THE HE MUST APPLY FOR A STORM WATER CONSTRUCTION PERMIT. THE REQUIREMENTS OF SUCH, INCLUDING PREPARATION AND IMPLEMENTATION OF A STORM WATER POLLUTION PREVENTION PLAN, SHALL BE THE RESPONSIBILITY OF THE CONTRACTOR, WHICH SHALL BE AT NO ADDITIONAL COST TO THE OWNER.
11. ALL QUANTITIES SHOWN ON THE PLANS ARE THEORETICAL, PAYMENT FOR QUANTITIES TO THE CONTRACTOR SHALL BE IN ACCORDANCE WITH THE SPECIFICATIONS.
12. THE WORK IN THIS CONTRACT SHALL CONFORM TO THE PROJECT PLANS AND SPECIFICATIONS, INCLUDING BUT NOT LIMITED TO THE CURRENT EDITION OF THE LA DOTD STANDARD SPECIFICATIONS FOR ROADS AND BRIDGES, INCLUDING REVISIONS, AMENDMENTS AND SUPPLEMENTS. IN CASE OF A CONFLICT BETWEEN THE PROJECT SPECIFICATIONS AND THE LA DOTD SPECIFICATIONS, THE MORE STRINGENT SHALL GOVERN UNLESS SPECIFIED BY PROJECT ENGINEER.
13. ANY DAMAGE TO PROPERTY CAUSED BY THE CONTRACTOR'S ACTIVITIES WILL BE REPAIRED OR REPLACED PROMPTLY AT THE EXPENSE OF THE CONTRACTOR AND TO THE SATISFACTION OF THE OWNER.
14. ALL EXISTING ROAD SIGNS DISTURBED DUE TO CONSTRUCTION ARE TO BE REINSTALLED AS PER PROJECT ENGINEER. ALL SIGNS DAMAGED DURING CONSTRUCTION, ARE TO REPLACED IN KIND (NO DIRECT PAY).
15. THE CONTRACTOR SHALL MAINTAIN POSITIVE DRAINAGE FOR THE DURATION OF THE PROJECT. NO MATERIALS, EQUIPMENT OR ANY OTHER OBSTACLES SHALL BE LEFT OR STORED AT LOCATIONS WHICH IMPEDE THE RUNOFF OF STORM WATER FROM THE CONSTRUCTION SITE AND/OR ADJACENT PROPERTIES.
16. THE CONTRACTOR SHALL TAKE SPECIAL CARE WHEN OPERATING NEAR ANY EXISTING OR RELOCATED UTILITIES. THE CONTRACTOR SHALL ASSUME ALL LIABILITY FOR ANY DAMAGE TO ANY UTILITY CAUSED BY CONSTRUCTION ACTIVITIES.
17. EXISTING DRAINAGE STRUCTURES TO REMAIN UNLESS NOTED OTHERWISE. COST OF REMOVAL OF DRAINAGE STRUCTURES IS TO BE INCLUDED IN THE COST OF ITEM 202-01-00100 REMOVAL OF STRUCTURES AND OBSTRUCTIONS.
18. CONTRACTOR SHALL FIELD VERIFY ALL TIE-IN ELEVATIONS PRIOR TO CONSTRUCTION.
19. CONTRACTOR SHALL FIELD VERIFY REQUIRED CATCH BASIN TOP ELEVATIONS PRIOR TO ORDERING MATERIALS. ALL CATCH BASINS SHALL BE SET TO ENSURE POSITIVE DRAINAGE. ANY REQUIRED ADJUSTMENTS SHALL BE AT NO ADDITIONAL PAY.
20. BEDDING MATERIAL FOR PIPES AND STRUCTURES SHALL BE INCLUDED WITH THE COSTS OF PIPES AND STRUCTURES.

SURVEY NOTES:

THE LOCATIONS OF UNDERGROUND AND OTHER NONVISIBLE UTILITIES SHOWN HEREON HAVE BEEN DETERMINED FROM DATA EITHER FURNISHED BY THE AGENCIES CONTROLLING SUCH DATA AND/OR EXTRACTED FROM RECORDS MADE AVAILABLE TO US BY THE AGENCIES CONTROLLING SUCH RECORDS. WHERE FOUND, THE SURFACE FEATURES OF LOCATIONS ARE SHOWN. THE ACTUAL NONVISIBLE LOCATIONS MAY VARY FROM THOSE SHOWN HEREON. EACH AGENCY SHOULD BE CONTACTED RELATIVE TO THE PRECISE LOCATION OF ITS UNDERGROUND INSTALLATION PRIOR TO ANY RELIANCE UPON THE ACCURACY OF SUCH LOCATIONS SHOWN HEREON, INCLUDING PRIOR TO EXCAVATION AND DIGGING.

VERTICAL DATUM BASIS:

ELEVATIONS SHOWN ON THIS SURVEY ARE BASED ON THE NORTH AMERICAN VERTICAL DATUM OF 1988 (NAVD88) UTILIZING GEOID 12B. THEY ARE DERIVED FROM GPS OBSERVATIONS REFERENCED TO THE LOUISIANA STATE UNIVERSITY CONTINUOUSLY OPERATING REFERENCE STATIONS (CORS) NETWORK IN ACCORDANCE WITH LOUISIANA R.S. 50:173.1 COVERING VERTICAL CONTROL STANDARDS.

SERVITUDES:

THE SERVITUDES AND RESTRICTIONS SHOWN ON THIS SURVEY ARE LIMITED TO THOSE SET FORTH IN THE DESCRIPTION FURNISHED US AND THERE IS NO REPRESENTATION THAT ALL APPLICABLE SERVITUDES AND RESTRICTIONS ARE SHOWN HEREON. THE SURVEYOR HAS MADE NO TITLE SEARCH OR PUBLIC RECORD SEARCH IN COMPILING THE DATA FOR THIS SURVEY.

UTILITY INFORMATION

SUBSURFACE UTILITY INFORMATION SHOWN HEREON, WHICH WAS NOT DERIVED FROM DIRECT FIELD OBSERVATION, WERE TAKEN FROM MUNICIPAL GEOGRAPHIC INFORMATION SYSTEMS (GIS) DATA AVAILABLE; THESE DATA ARE SHOWN TO QUALITY LEVEL D STANDARDS. UNLESS OTHERWISE NOTED, GIS-DERIVED SUBSURFACE UTILITIES HAVE NOT BEEN FIELD VERIFIED BY THE SURVEYOR.

UTILITY QUALITY LEVEL

THE SUBSURFACE UTILITIES AS SHOWN ON THE MAP OF SURVEY WERE IDENTIFIED USING INDUSTRY STANDARD DETECTION METHODOLOGIES IN STRICT ACCORDANCE WITH THE AMERICAN SOCIETY OF CIVIL ENGINEERS (ASCE) STANDARD GUIDELINE FOR THE COLLECTION AND DEPICTION OF EXISTING SUBSURFACE UTILITY DATA. QUALITY LEVELS AND DEFINITIONS PER CI/ASCE STANDARD NO. 38-02:

QUALITY LEVEL D - QL-D: DEPICTED ACCORDING TO UTILITY RECORD INFORMATION AND IN-FIELD VISUAL INSPECTION. NO ELECTRONIC DESIGNATING INFORMATION WAS OBTAINED.

QUALITY LEVEL C - QL-C: EXISTING UTILITY STRUCTURES HAVE BEEN FIELD LOCATED AND SURVEYED TO ASSIST IN THE DEPICTING THE UTILITIES SHOWN ON THE RECORDS. NO ELECTRONIC DESIGNATING INFORMATION WAS OBTAINED.

QUALITY LEVEL B - QL-B: INFORMATION WAS OBTAINED THROUGH THE APPLICATION OF APPROPRIATE SURFACE GEOPHYSICAL METHODS TO DETERMINE THE EXISTENCE AND APPROPRIATE HORIZONTAL POSITION OF THE SUBSURFACE UTILITIES. QL-B DATA SHOULD BE REPRODUCIBLE BY SURFACE GEOPHYSICS AT ANY POINT OF THEIR DEPICTION.

QUALITY LEVEL A - QL-A: O BTAIN PRECISE HORIZONTAL AND VERTICAL POSITION OF THE UTILITY LINE BY EXCAVATING A TEST HOLE. THE TEST HOLE SHALL BE DONE USING VACUUM EXCAVATION OR COMPARABLE NON-DESTRUCTIVE EQUIPMENT IN A MANNER AS TO CAUSE NO DAMAGE TO THE UTILITY LINE.

TEMPORARY BENCHMARK (TBM):

TBM "J"
60D NAIL IN POWER POLE
N: 659828
E: 3410341.5
ELEVATION: 22.18' N.A.V.D. 88 GEOID 12B

TBM "K"
60D NAIL IN POWER POLE
N: 660429.5
E: 3410594.9
ELEVATION: 21.00' N.A.V.D. 88 GEOID 12B

TBM "L"
60D NAIL IN POWER POLE
N: 659788
E: 3411238.1
ELEVATION: 20.55' N.A.V.D 88 GEOID 12B

TBM "M"
60D NAIL IN POWER POLE
N: 659077.8
S: 3410616.4
ELEVATION: 20.87' N.A.V.D 88 GEOID 12B

LEGEND

- REMOVAL OF ASPHALT CONCRETE PAVEMENT AND BASE
- REMOVAL OF DRIVE
- REQUIRED MILLING
- PROPOSED AGGREGATED DRIVE
- PROPOSED CONCRETE
- PROPOSED ASPHALT CONCRETE

UTILITY COMPANIES AND CONTACT NUMBERS

UTILITY	OWNER	CONTACT NUMBER
ELECTRIC	DEMCO	1-225-622-2549
ELECTRIC	ENTERGY	1-800-968-8243
PHONE/CABLE	COX	1-866-272-5777
PHONE/CABLE	EATEL	225-621-4300
WATER	BR WATER CO.	225-925-2011
NATURAL GAS	ATMOS SOUTHERN	888-505-3476
NATURAL GAS	NATURAL GAS	225-545-2569
NATURAL GAS	DENBURY NAT. GAS	225-665-1409

TOPO LEGEND

- BARRICADE POST
- BASIN TOP
- COMBINATION POLE
- DEADMAN POLE
- DRAINAGE MANHOLE TOP
- DROP INLET TOP
- FENCE POST
- FENCELINE
- FIRE HYDRANT
- GAS METER
- GAS UTILITY MARKER
- GAS VALVE
- GASLINE
- GENERAL/PRIVATE LIGHT POLE
- GUY POLE
- LIGHT POLE STANDARD
- MAILBOX
- POWERLINE
- POWER POLE
- POWER TRANSFORMER
- POWER VAULT
- PRIMARY CONTROL
- PROPERTY CORNER
- R/W LDH MONUMENT
- SECONDARY CONTROL
- SEWER CLEANOUT
- SEWER MANHOLE TOP
- SEWER PUMP
- SEWER SEPTIC TANK
- SEWERLINE
- SIGN POLE
- TELEPHONE CROSS CONNECTION BOX
- TELEPHONE PEDESTAL
- TELEPHONE POLE
- TELEPHONE UTILITY MARKER
- TELEPHONE LINE (ABOVEGROUND)
- TELEVISION LINE (ABOVEGROUND)
- TEMPORARY BENCHMARK (TBM)
- TRAFFIC SIGN
- TREE CLUSTER
- TREE
- UNDERGROUND STORAGE TANK
- WATER METER
- WATER VALVE VAULT
- WATER VALVE
- WATERLINE

QUALITY LEVEL "B"

E(B)	UNDERGROUND ELECTRICAL
F/O(B)	UNDERGROUND FIBER OPTIC
FM(B)	UNDERGROUND FORCE MAIN
GAS(B)	UNDERGROUND GAS
O(B)	UNDERGROUND PIPELINE
SS(B)	UNDERGROUND SANITARY SEWER
T(B)	UNDERGROUND TELEPHONE
SD(B)	UNDERGROUND STORM DRAIN
TFO(B)	UNDERGROUND TRAFFIC FIBER
UNK(B)	UNDERGROUND UNKNOWN UTILITY
W(B)	UNDERGROUND WATER
T(B) (TB)	TELEPHONE DUCT BANK

QUALITY LEVEL "C"

E(C)	UNDERGROUND ELECTRICAL
F/O(C)	UNDERGROUND FIBER OPTIC
FM(C)	UNDERGROUND FORCE MAIN
GAS(C)	UNDERGROUND GAS
O(C)	UNDERGROUND PIPELINE
SS(C)	UNDERGROUND SANITARY SEWER
T(C)	UNDERGROUND TELEPHONE
SD(C)	UNDERGROUND STORM DRAIN
TFO(C)	UNDERGROUND TRAFFIC FIBER
UNK(C)	UNDERGROUND UNKNOWN UTILITY
W(C)	UNDERGROUND WATER
T(C) (C)T	TELEPHONE DUCT BANK

QUALITY LEVEL "C"

E(D)	UNDERGROUND ELECTRICAL
F/O(D)	UNDERGROUND FIBER OPTIC
FM(D)	UNDERGROUND FORCE MAIN
GAS(D)	UNDERGROUND GAS
O(D)	UNDERGROUND PIPELINE
SS(D)	UNDERGROUND SANITARY SEWER
T(D)	UNDERGROUND TELEPHONE
SD(D)	UNDERGROUND STORM DRAIN
TFO(D)	UNDERGROUND TRAFFIC FIBER
UNK(D)	UNDERGROUND UNKNOWN UTILITY
W(D)	UNDERGROUND WATER
T(D) (D)T	TELEPHONE DUCT BANK

SHEET NUMBER 2

ASCENSION PARISH

PARISH | CONTROL SECTION | STATE PROJECT

DESIGNED S.J.T | CHECKED D.J.M | DETAILED S.J.T | CHECKED D.J.M | DATE JUNE 2024 | SHEET GENERAL NOTES AND LEGEND

NO.	DATE	BY

GENERAL NOTES AND LEGEND

LA HWY 44 AT PARKER RD TEMPORARY TURN LANE

MCKIM&CREED
(225) 644-5523
www.mckimcreed.com
1022 S. Purpera Ave.
Gonzales, LA 70707-0298

<HILARIO> 06/25/24 8:41 AM I:\08391\0009\ENG\80-DRAWINGS\TEMP TURN LANE DESIGN\2 - GENERAL NOTES AND LEGEND.DWG - 2

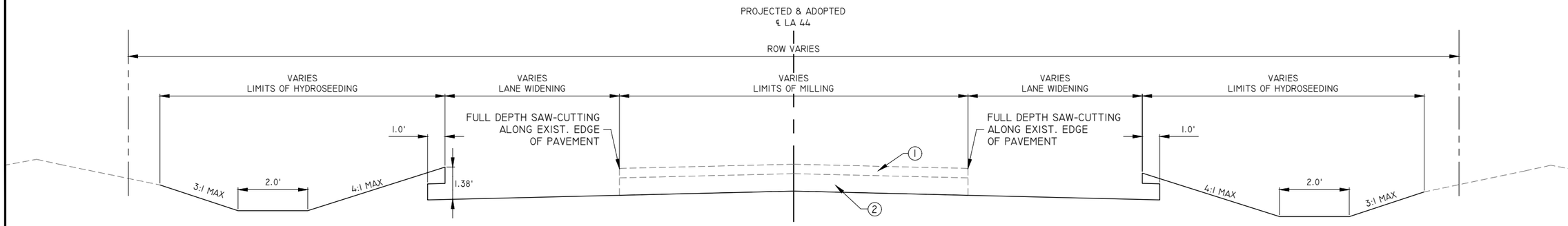

TYPICAL GRADING SECTION

N.T.S.

APPLIES STA: 105+09.39 TO 115+80.37

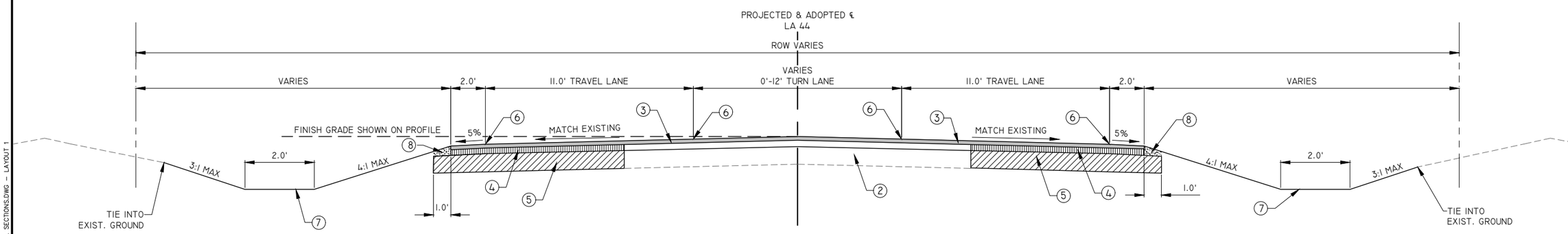

PROPOSED TYPICAL SECTION

N.T.S.

APPLIES STA: 105+09.39 TO 115+80.37

1. REQ'D MILLING OF ASPHALT PAVEMENT (2" AVERAGE THICKNESS)
2. EXISTING BASE TO REMAIN
3. 2" ASPHALT CONCRETE (WEARING COURSE), LEVEL 1
4. 4" ASPHALT CONCRETE (BINDER COURSE), LEVEL 1
5. 12" CLASS II BASE COURSE (SOIL CEMENT), LEVEL 1
6. REQ'D PAVEMENT MARKERS AND STRIPING
7. PROPOSED DITCH
8. EMBANKMENT MATERIAL

SHEET NUMBER 3

ASCENSION PARISH

PARISH	CONTROL SECTION	STATE PROJECT

DESIGNED	SJT	DETAILED	SJT
CHECKED	DJM	CHECKED	DJM
DATE	JUNE 2024		
SHEET	TYPICAL SECTIONS		

NO.	DATE	BY

TYPICAL SECTIONS

LA HWY 44 AT PARKER RD TEMPORARY TURN LANE

MCKIM&CREED
ENGINEERS, SURVEYORS, PLANNERS
(225) 644-5523
www.mckimcreed.com
1022 S. Purpera Ave.
Gonzales, LA 70707-0298

<HILARIO> 06/25/24 8:41 AM I:\08391\0009\ENG\80-DRAWINGS\TEMP TURN LANE DESIGN\3 - TYPICAL SECTIONS.DWG - LAYOUT 1

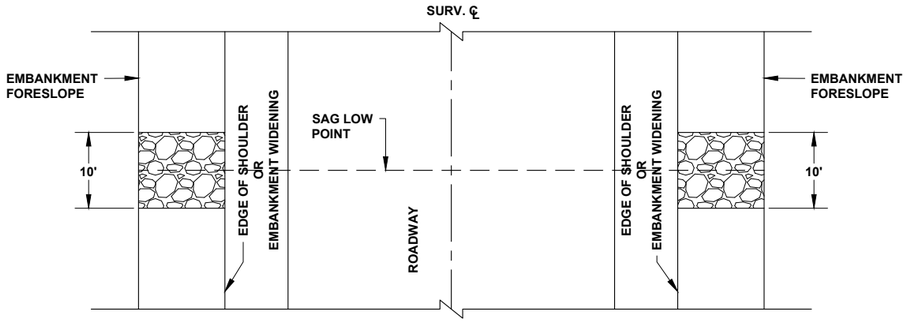

1 DAYLIGHTING BASE COURSE DETAIL

N.T.S.

NOTES:

EXTEND GEOTEXTILE FABRIC & CLASS II BASE COURSE TO EMBANKMENT FORESLOPE FOR A DISTANCE OF 10 FEET

SHEET NUMBER 3A

ASCENSION PARISH

PARISH | CONTROL SECTION | STATE PROJECT

DESIGNED S.J.T.
CHECKED D.J.M.
DETAILED S.J.T.
CHECKED D.J.M.
DATE JUNE 2024.
SHEET MISCELLANEOUS DETAILS

NO.	DATE	BY

MISCELLANEOUS DETAILS

LA HWY 44 AT PARKER RD TEMPORARY TURN LANE

MCKIM&CREED
ENGINEERS SURVEYORS PLANNERS
(225) 644-5523
www.mckimcreed.com
1022 S. Purpera Ave.
Gonzales, LA 70707-0298

<PHILARIO> 06/25/24 8:41 AM I:\08391\0009\ENG\80-DRAWINGS\TEMP TURN LANE DESIGN\3A - MIS DETAILS.DWG - LAYOUT 1

EARTHWORK

STATION	STATION	GENERAL EXCAVATION	EMBANKMENT
		CU. YD.	CU. YD.
106+05.12	115+63.60	307	909
TOTAL		307	909

ASPHALT CONCRETE

STATION	STATION	DESCRIPTION	2.5" THICK BINDER COURSE				2" THICK WEARING COURSE			
			LENGTH	WIDTH	AREA	WEIGHT	LENGTH	WIDTH	AREA	WEIGHT
			FEET	FEET	SQ. YD.	TON	FEET	FEET	SQ. YD.	TON
105+09.39	115+86.00	MAINLINE LA 44	1076.61	VARIES	1710.249	235.2	1076.61	VARIES	4601.345	506.1
TOTAL						235.2				506.1

BASE COURSE

STATION	STATION	DESCRIPTION	LENGTH	CLASS II BASE COURSE (12" THICK)	
			FEET	WIDTH	SQ. YD.
105+09.39	115+64.15	LA 44 LANE WIDENING	1054.76	9.32	1093.2
TOTAL					1093.2

MILLING ASPHALT PAVEMENT

STATION	STATION	DESCRIPTION	LENGTH	WIDTH	MILLING (2" AVG DEPTH)
			FEET	FEET	SQYD
106+05.12	115+80.37	MILLING OF LA 44	975	VARIES	2,974
TOTAL					2,974

DRIVEWAYS

STATION	SIDE CL	TYPE	LENGTH FEET	WIDTH FEET	SQ. YARDS DRIVE (6") AGGREGATE	SQ. YARDS DRIVE (6") CONCRETE
108+36.60	RT	C	22.4	20.0	49.7	-
112+61.27	RT	C	22.1	13.6	33.4	-
113+41.76	RT	C	22.0	11.4	27.9	-
TOTAL					145.3	

PLASTIC PAVEMENT STRIPING & PAVEMENT MARKINGS

STATION	STATION	DESCRIPTION	LENGTH LN FT	SOLID LINE 4 INCH	SOLID LINE 8 INCH	DOTTED LINE 8 INCH	SOLID LINE 24 INCH	TURN ARROWS	REFLECTORIZED RAISED PAVEMENT MARKERS (CLASS IV)
				MILE	MILE	MILE	LNFT	EACH	EACH
105+09.39	115+90.51	LA 44 MAINLINE	1081.1	0.810	0.161	0.0418	26	2	190
TOTAL				0.810	0.161	0.042	26	2	190

DRIVES AND WALKS REMOVAL

STATION	SIDE CL	DESCRIPTION	LENGTH FEET	WIDTH FEET	SQ. YARDS DRIVE (6")
108+36.63	RT	AGGREGATE DRIVE	27.3	19.8	60
112+61.27	RT	AGGREGATE DRIVE	27.1	14.5	44
113+41.76	RT	AGGREGATE DRIVE	27.2	14.9	45
TOTAL					149

SAW CUTTING

STATION (START)	STATION (END)	DESCRIPTION	SAW CUTTING ASPHALT PAVEMENT
			IN. FT.
105+09.06	105+09.06	BEGIN MILL & OVERLAY	44
115+51.14	115+51.14	END MILL & OVERLAY	67
105+09.06	115+51.14	SAW CUTTING EOP	35431
TOTAL			35,541

SHEET NUMBER 4

ASCENSION PARISH

PARISH | CONTROL SECTION | STATE PROJECT

S.J.T. D.J.M. DESIGNED CHECKED | S.J.T. D.J.M. DETAILED CHECKED | JUNE 2024 QUANTITY SHEETS DATE SHEET

NO. | DATE | BY

QUANTITY SHEETS

LA HWY 44 AT PARKER RD TEMPORARY TURN LANE

M·K·M&CREED ENGINEERS · SURVEYORS · PLANNERS
(225) 644-5523
www.mckimcreed.com
1022 S. Purpera Ave.
Gonzales, LA 70707-0298

<JHILARIO> 06/25/24 8:41 AM L:\08391\0009\ENG\80-DRAWINGS\TEMP TURN LANE DESIGN\4 - QUANTITY SHEETS.DWG - 4

SUMMARY OF ESTIMATED QUANTITIES

ITEM	DESCRIPTION	UNIT	QUANTITY
201-01-00100	CLEARING AND GRUBBING	ACRE	0.83
202-01-00100	REMOVAL OF STRUCTURES AND OBSTRUCTIONS	LUMP SUM	1.0
202-02-00020	REMOVAL OF DRIVEWAYS	SQ. YD.	149
202-03-38000	RELOCATION OF SIGN	EACH	10
202-03-38020	RELOCATION OF SIGN POLE	EACH	8
203-01-00100	GENERAL EXCAVATION	CU. YD.	307
203-03-00100	EMBANKMENT	CU. YD.	909
203-08-00100	GEOTEXTILE FABRIC	SQ. YD.	16
204-02-00100	TEMPORARY HAY BALES	EACH	60
204-05-00100	TEMPORARY SEDIMENT CHECK DAMS (HAY)	EACH	15
204-06-00100	TEMPORARY SILT FENCING	LN. FT.	1897
302-01-00300	CLASS II BASE COURSE (CRUSHED STONE)	CU. YD.	8
302-02-12020	CLASS II BASE COURSE (12" THICK) (SOIL CEMENT)	SQ. YD.	1093.2
401-01-00100	AGGREGATE SURFACE COURSE (NET SECTION)	CU. YD.	24.7
502-01-00100	ASPHALT CONCRETE	TONS	759.3
509-01-00100	MILLING ASPHALT PAVEMENT	SQ. YD.	2974
701-03-01021	STORM DRAIN PIPE (18" RCP)	LN. FT.	34
701-04-01040	STORM DRAIN PIPE ARCH (24" RCPA)	LN. FT.	78
713-01-00100	TEMPORARY SIGNS AND BARRICADES	LUMP SUM	1.0
713-02-00100	TEMPORARY PAVEMENT MARKINGS (4" WIDTH)	LN. FT.	3900
713-06-00100	TEMPORARY REFLECTORIZED RAISED PAVEMENT MARKERS	EACH	49
727-01-00100	MOBILIZATION	LUMP SUM	1.0
731-02-00100	REFLECTORIZED RAISED PAVEMENT MARKERS (YELLOW/YELLOW)	EACH	140
731-02-00100	REFLECTORIZED RAISED PAVEMENT MARKERS (WHITE/RED)	EACH	50
732-01-01080	PLASTIC PAVEMENT STRIPING (SOLID LINE) (24" WIDTH) (THERMOPLASTIC 90 MIL)	LNFT	26
732-02-02000	PLASTIC PAVEMENT STRIPING (SOLID LINE) (4" WIDTH) (THERMOPLASTIC 90 MIL)	MILE	0.810
732-02-02040	PLASTIC PAVEMENT STRIPING (SOLID LINE) (8" WIDTH) (THERMOPLASTIC 90 MIL)	MILE	0.161
732-03-02030	PLASTIC PAVEMENT STRIPING (DOTTED LINE) (8" WIDTH) (2' L) (THERMOPLASTIC 90 MIL)	MILE	0.042
732-04-01080	PLASTIC PAVEMENT LEGENDS & SYMBOLS (ARROW - LEFT TURN)	EACH	2
735-01-00100	MAILBOXES	EACH	4
735-02-00100	MAILBOX SUPPORTS (SINGLE)	EACH	4
739-01-00100	HYDRO-SEEDING	ACRE	0.562
740-01-00100	CONSTRUCTION LAYOUT	LUMP SUM	1.0
NS-500-00340	SAW CUTTING ASPHALTIC CONCRETE PAVEMENT	IN. FT	35541
S-001	SWPPP	LUMP SUM	1.0

SHEET NUMBER 5

ASCENSION PARISH

PARISH | CONTROL SECTION | STATE PROJECT

DESIGNED S.J.T.
CHECKED D.J.M.
DETAILED S.J.T.
CHECKED D.J.M.
DATE JUNE 2024
SHEET SUMMARY OF ESTIMATED QUANTITIES

NO.	DATE	BY

SUMMARY OF ESTIMATED QUANTITIES

LA HWY 44 AT PARKER RD TEMPORARY TURN LANE

McKIM&CREED
ENGINEERS SURVEYORS PLANNERS
(225) 644-5523
www.mckimcreed.com
1022 S. Purpera Ave.
Gonzales, LA 70707-0298

<HILARIO> 06/25/24 8:42 AM I:\08391\0009\ENG\80-DRAWINGS\TEMP TURN LANE DESIGN\5 - SUMMARY OF ESTIMATED QUANTITIES.DWG - 5

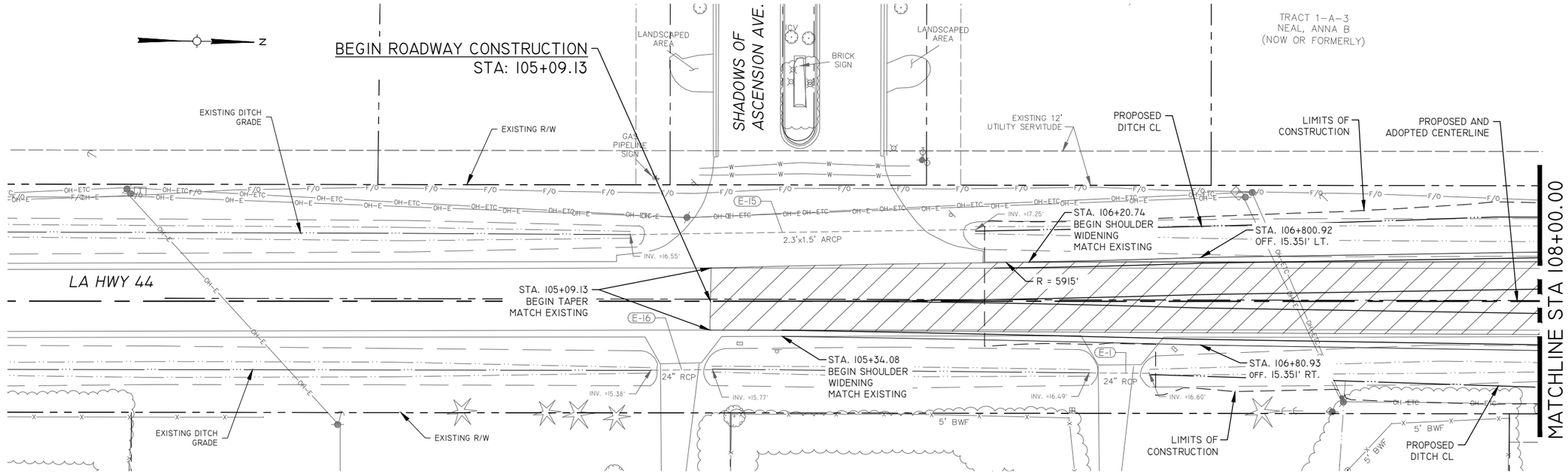

SCALES:

PLAN: 1" = 20'

PROFILE:

HORIZ: 1" = 20'

VERT: 1" = 2'

LEFT SIDE

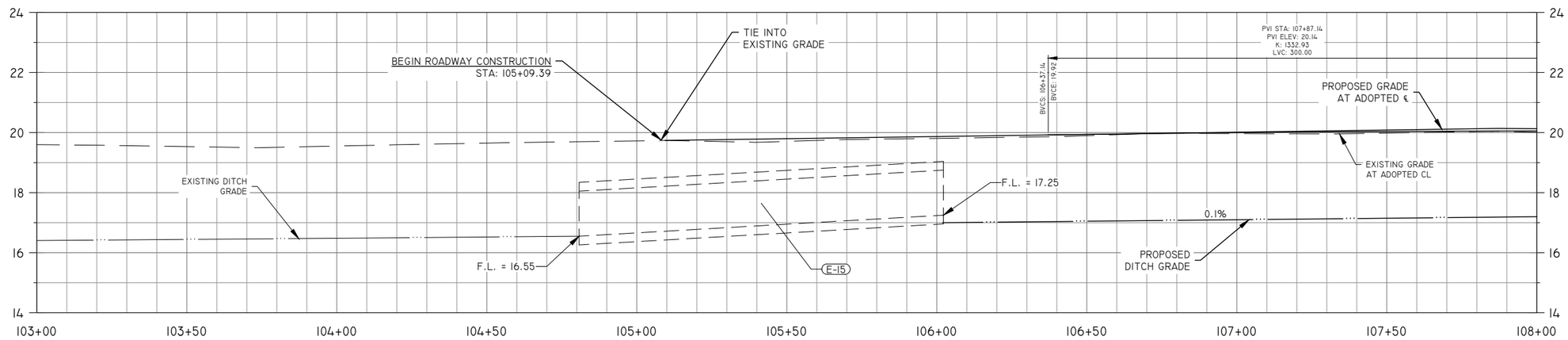

RIGHT SIDE

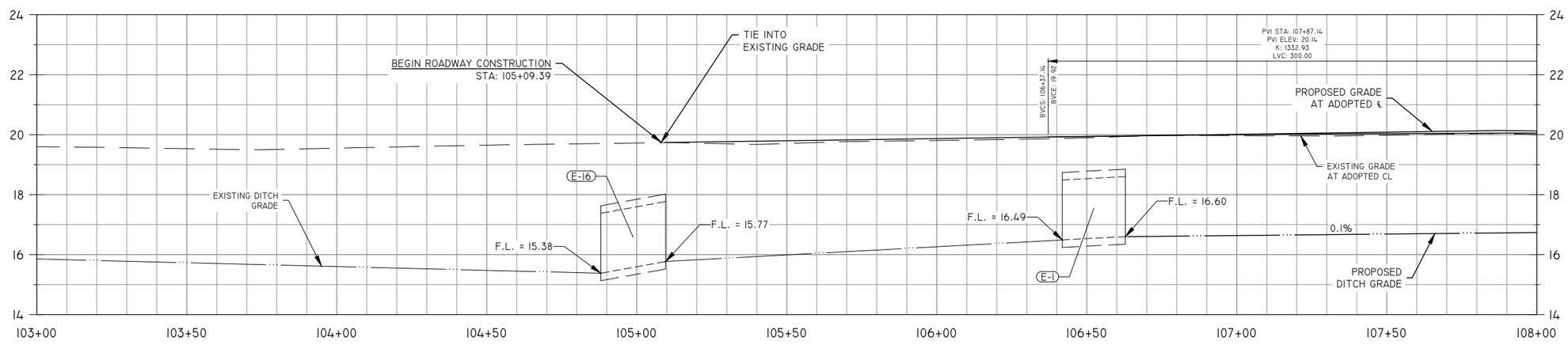

SHEET NUMBER 6

ASCENSION PARISH

PARISH	CONTROL SECTION	STATE PROJECT

DESIGNED	S.J.T	DATE	JUNE 2024
CHECKED	D.J.M	SHEET	PLAN AND PROFILES
DETAILED	S.J.T		
CHECKED	D.J.M		

NO.	DATE	BY

PLAN AND PROFILES

LA HWY 44 AT PARKER RD TEMPORARY TURN LANE

MKIM&CREED
ENGINEERS SURVEYORS PLANNERS
(225) 644-5523
www.mckimcreed.com
1022 S. Burpere Ave.
Gonzales, LA 70707-0298

<HILARIO> 06/25/24 8:42 AM I:\08391\0009\ENG\80-DRAWINGS\TEMP TURN LANE DESIGN\6-9 PLAN AND PROFILES.DWG - 6

SCALES:

PLAN: 1" = 20'

PROFILE:

HORIZ: 1" = 20'

VERT: 1" = 2'

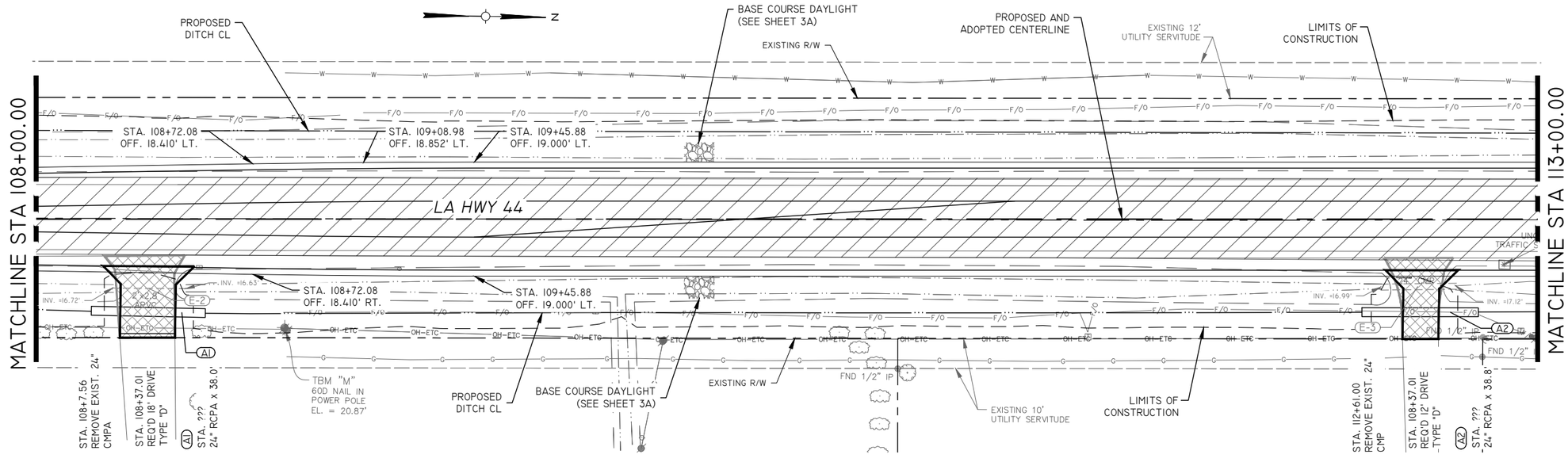

LEFT SIDE

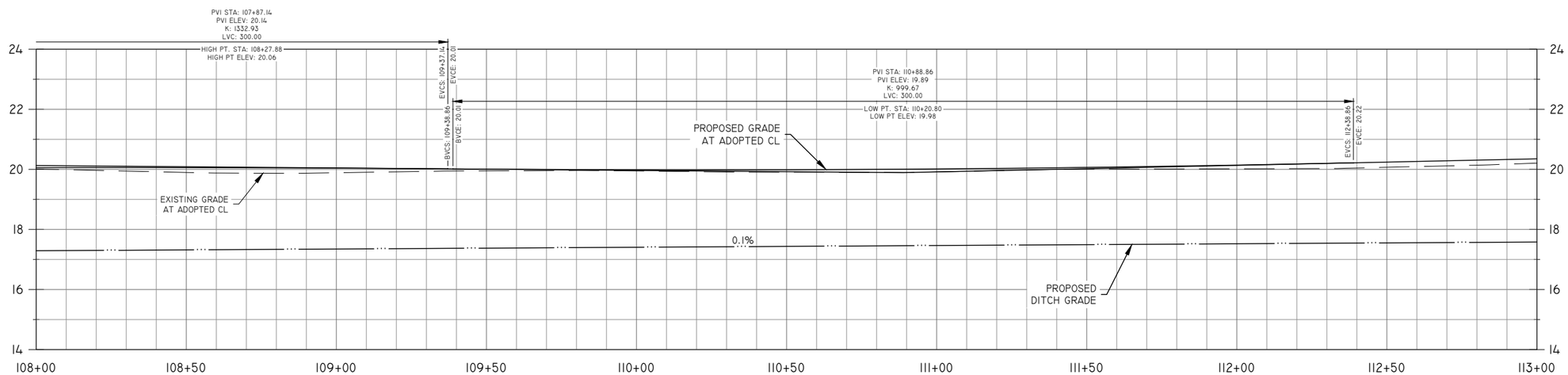

RIGHT SIDE

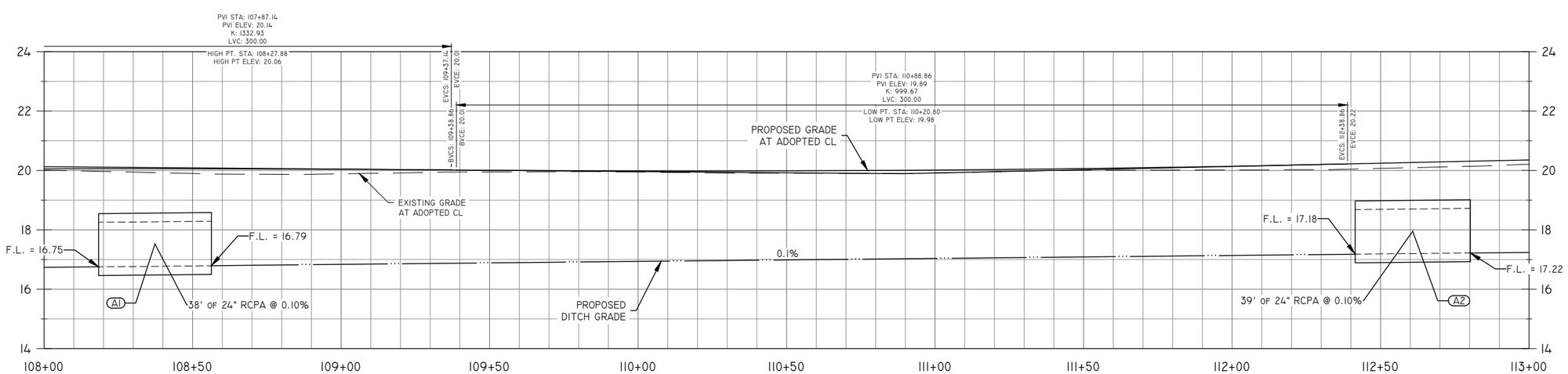

SHEET NUMBER 7

ASCENSION PARISH

PARISH	CONTROL SECTION	STATE PROJECT

DESIGNED	S.J.T	DETAILED	S.J.T	DATE	JUNE 2024
CHECKED	D.J.M	CHECKED	D.J.M	SHEET	PLAN AND PROFILES

NO.	DATE	BY

PLAN AND PROFILES

LA HWY 44 AT PARKER RD TEMPORARY TURN LANE

MKM&CREED
(225) 644-5523
www.mckimcreed.com
1022 S. Purpera Ave.
Gonzales, LA 70707-0298

<HILARIO> 06/25/24 8:42 AM I:\08391\0009\ENG\80-DRAWINGS\TEMP TURN LANE DESIGN\6-9 PLAN AND PROFILES.DWG - 7

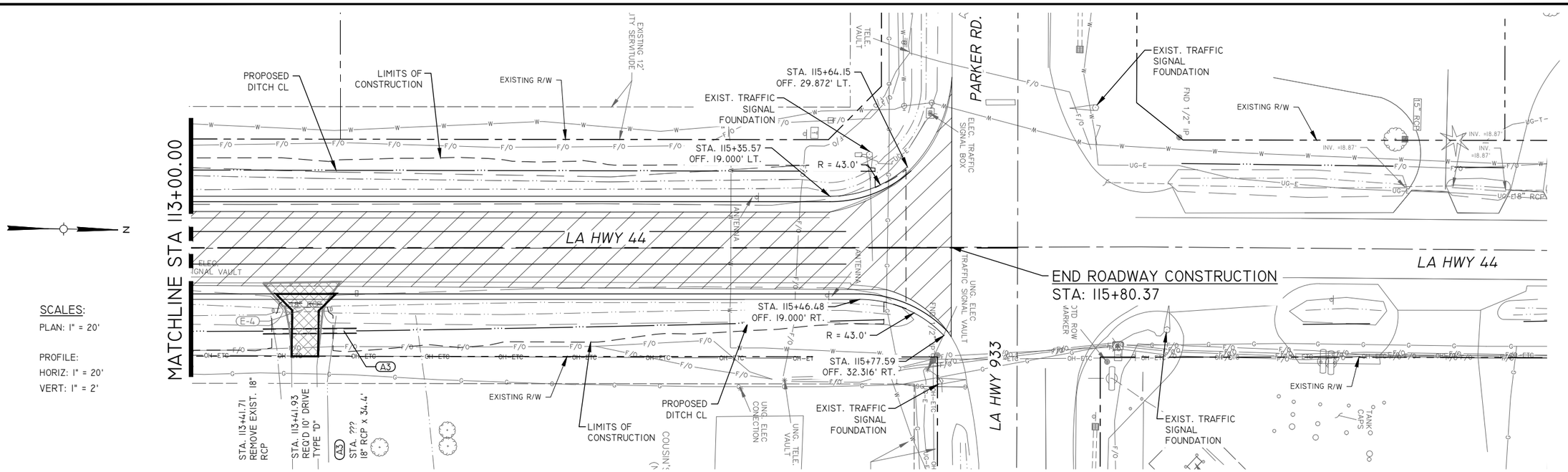

SCALES:

PLAN: 1" = 20'

PROFILE:

HORIZ: 1" = 20'

VERT: 1" = 2'

LEFT SIDE

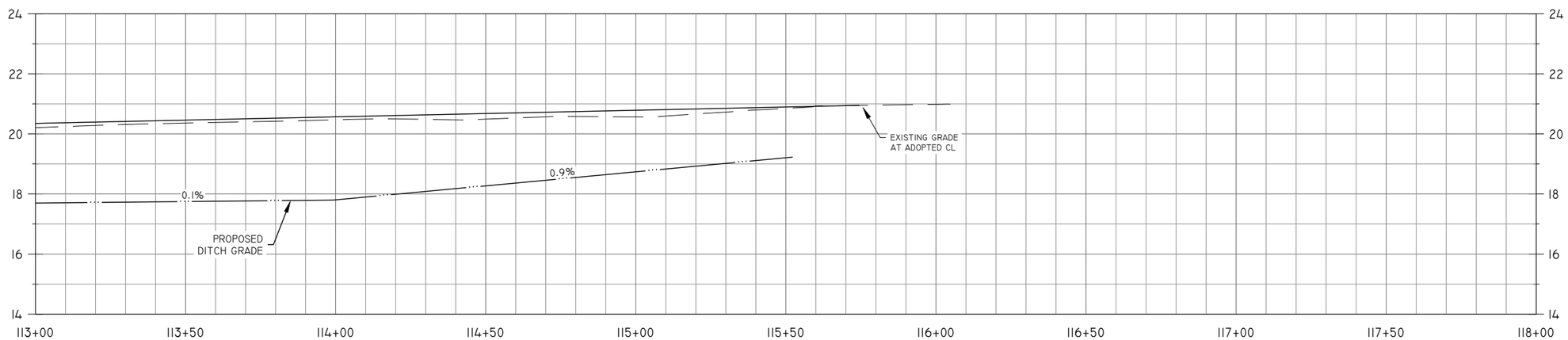

RIGHT SIDE

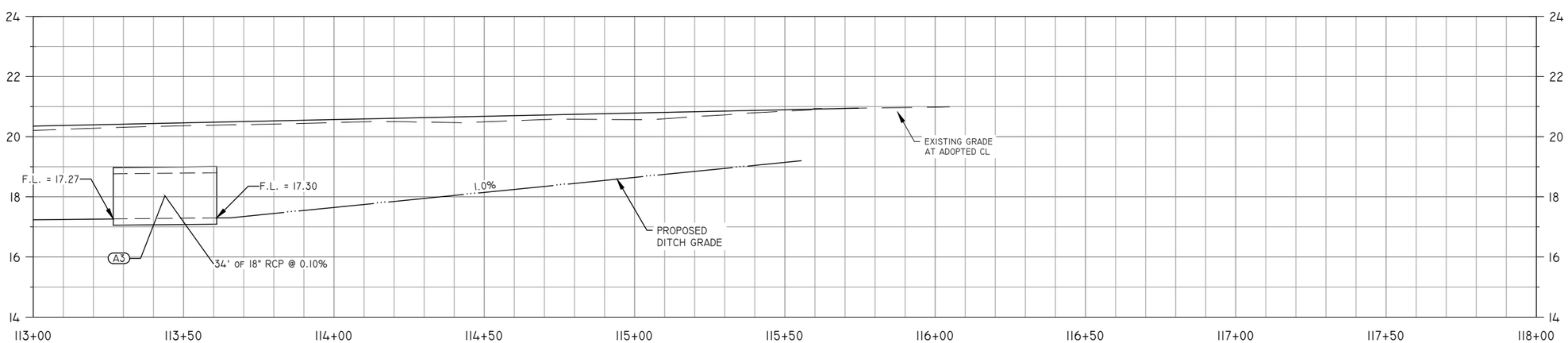

SHEET NUMBER 8

ASCENSION PARISH

PARISH	CONTROL SECTION	STATE PROJECT

DESIGNED	S.J.T.
CHECKED	D.J.M.
DETAILED	S.J.T.
CHECKED	D.J.M.
DATE	JUNE 2024.
SHEET	PLAN AND PROFILES

NO.	DATE	BY

PLAN AND PROFILES

LA HWY 44 AT PARKER RD TEMPORARY TURN LANE

MKIM&CREED
ENGINEERS, SURVEYORS, PLANNERS
(225) 644-5523
www.mckimcreed.com
1022 S. Burpara Ave.
Gonzales, LA 70707-0298

<HILARIO> 06/25/24 8:43 AM I:\08391\0009\ENG\80-DRAWINGS\TEMP TURN LANE DESIGN\6-9 PLAN AND PROFILES.DWG - 8

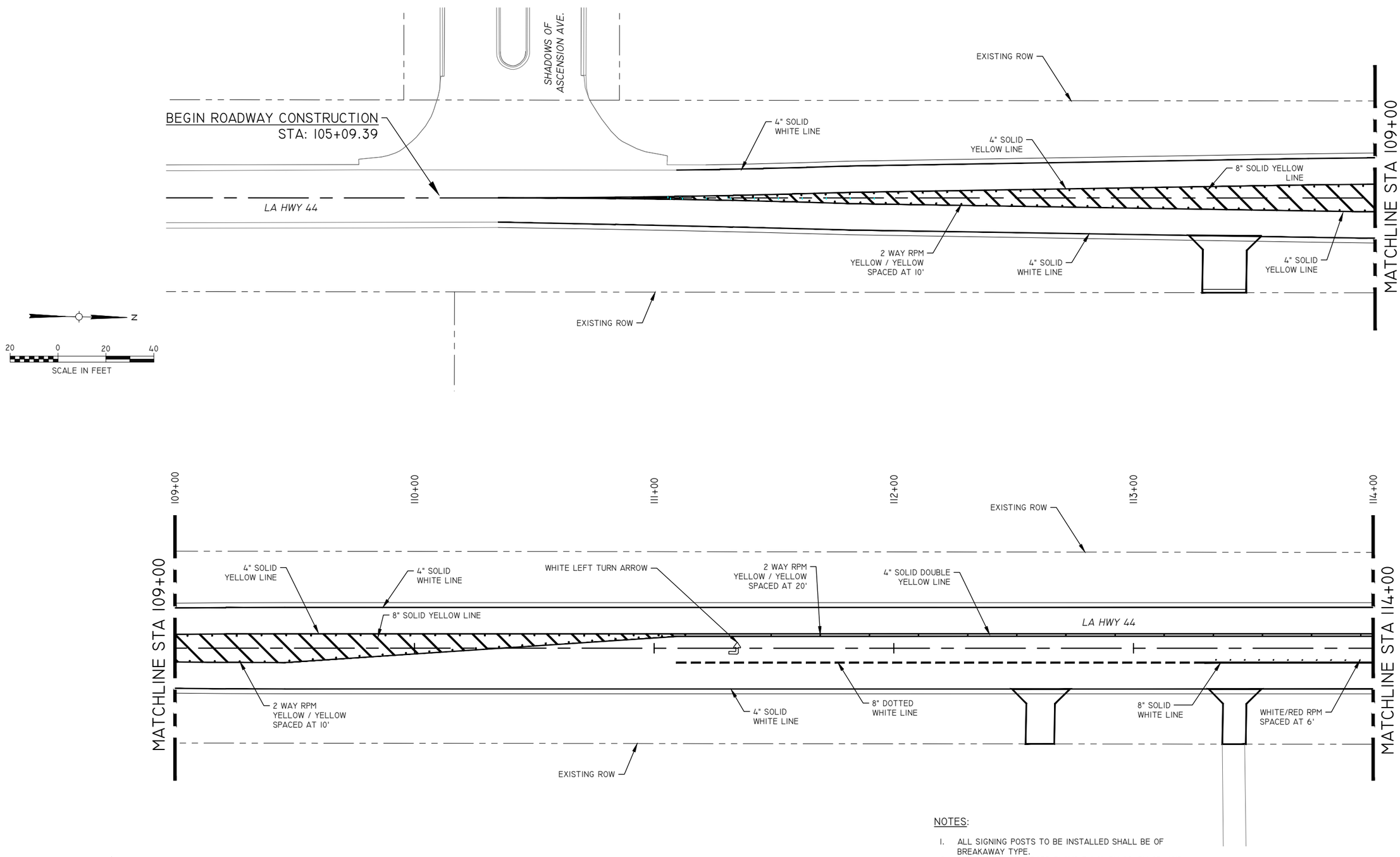

NOTES:

1. ALL SIGNING POSTS TO BE INSTALLED SHALL BE OF BREAKAWAY TYPE.
2. SEE LADOTD STANDARD PLANS PM-01, PM-02, PM-05, AND PM-06 FOR STRIPING REQUIREMENTS.
3. EXISTING SIGNS CONFLICTING WITH NEW SIGNING TO BE REMOVED UNLESS DIRECTED OTHERWISE BY THE PROJECT ENGINEER.

PAVEMENT MARKING AND PERMANENT SIGNING LAYOUT

SHEET NUMBER 9

ASCENSION PARISH

PARISH	CONTROL SECTION	STATE PROJECT

DESIGNED	SJT	JUNE 2024
CHECKED	DJM	PAVEMENT MARKINGS AND SIGNAGE
DETAILED	SJT	
CHECKED	DJM	
DATE		
SHEET		

NO.	DATE	BY

PAVEMENT MARKINGS AND SIGNAGE

LA HWY 44 AT PARKER RD TEMPORARY TURN LANE

MCKIM&CREED
(225) 644-5523
www.mckimcreed.com
1022 S. Purpera Ave.
Gonzales, LA 70707-0298

<HILARIO> 06/25/24 8:43 AM I:\0839\\0009\ENG\80-DRAWINGS\TEMP TURN LANE DESIGN\10 PAVEMENT MARKINGS AND SIGNAGE.DWG - 9 PAVEMENT MARKINGS AND SIGNAGE

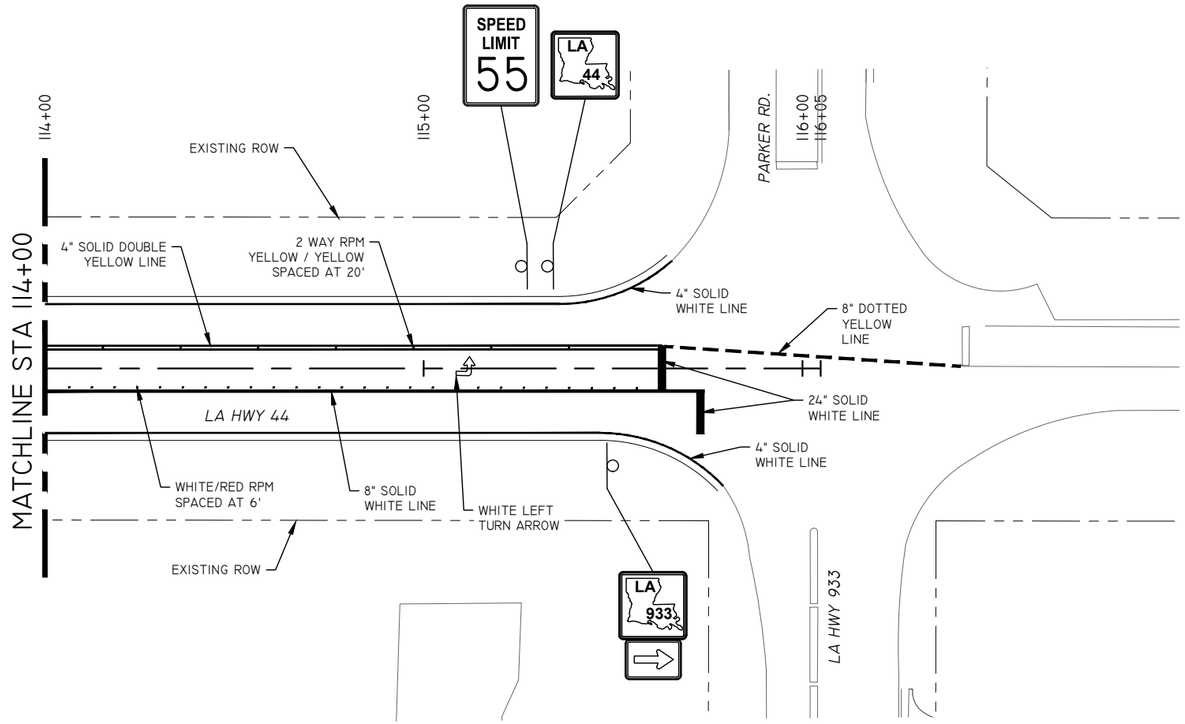

PAVEMENT MARKING AND PERMANENT SIGNING LAYOUT

N

20 0 20 40

SCALE IN FEET

NOTES:

1. ALL SIGNING POSTS TO BE INSTALLED SHALL BE OF BREAKAWAY TYPE.
2. SEE LADOTD STANDARD PLANS PM-01, PM-02, PM-05, AND PM-06 FOR STRIPING REQUIREMENTS.
3. EXISTING SIGNS CONFLICTING WITH NEW SIGNING TO BE REMOVED UNLESS DIRECTED OTHERWISE BY THE PROJECT ENGINEER.

SHEET NUMBER 10

ASCENSION PARISH

PARISH | CONTROL SECTION | STATE PROJECT

DESIGNED S.J.T.
CHECKED D.J.M.
DETAILED S.J.T.
CHECKED D.J.M.
DATE JUNE 2024
SHEET PAVEMENT MARKINGS AND SIGNAGE

NO. | DATE | BY

PAVEMENT MARKINGS AND SIGNAGE

LA HWY 44 AT PARKER RD TEMPORARY TURN LANE

McKIM&CREED
ENGINEERS SURVEYORS PLANNERS
(225) 644-5523
www.mckimcreed.com
1022 S. Burpero Ave.
Gonzales, LA 70707-0298

<HILARIO> 06/25/24 8:43 AM I:\08391\0009\ENG\80-DRAWINGS\TEMP TURN LANE DESIGN\10 PAVEMENT MARKINGS AND SIGNAGE.DWG - 10 PAVEMENT MARKINGS AND SIGNAGE

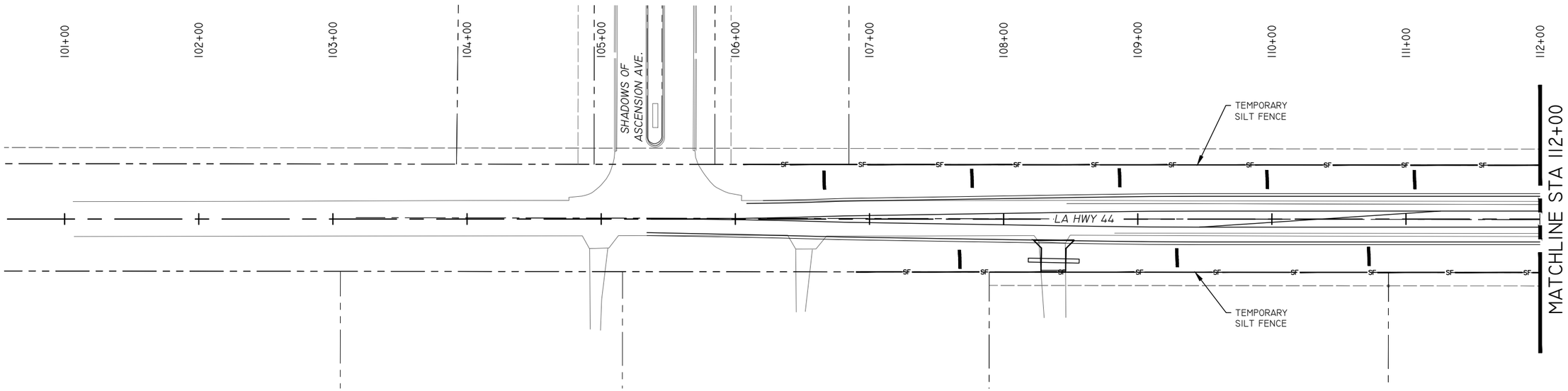

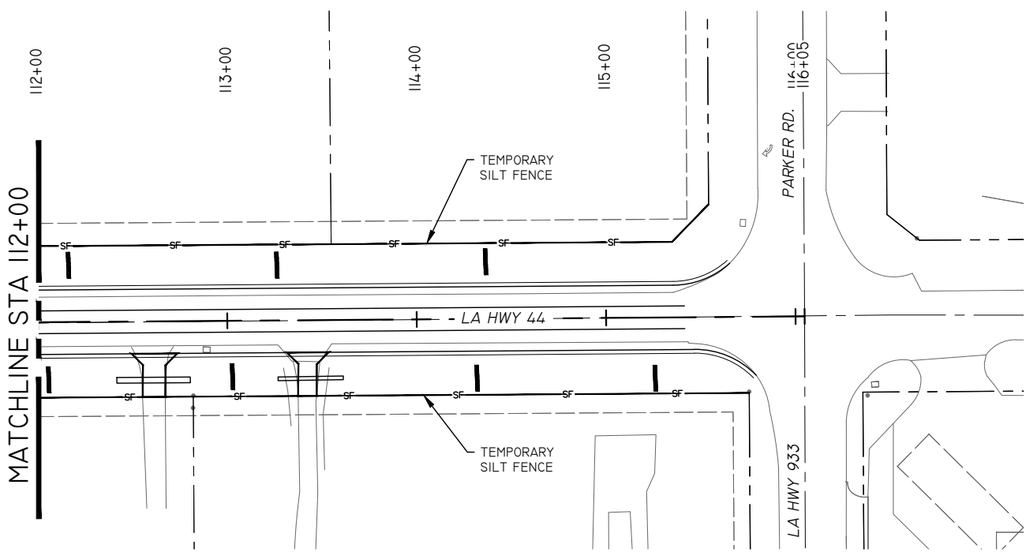

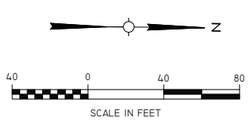

EROSION CONTROL NOTES:

1. LOCATIONS FOR EROSION CONTROL ITEMS ARE APPROXIMATE. CONTRACTOR SHALL BE RESPONSIBLE FOR ACTUAL LOCATIONS OF EROSION CONTROL ITEMS INSTALLATION, SUBJECT TO APPROVAL BY PROJECT ENGINEER.
2. EROSION CONTROL MEASURES SHOWN SHALL BE CONSIDERED MINIMAL REQUIRED. ADDITIONAL EROSION CONTROL MEASURES MAY BE REQUIRED BASED ON SCHEDULE, ACTUAL SITE CONDITIONS AT TIME OF CONSTRUCTION, REQUIREMENTS OF LOCAL PERMITTING AGENCIES, OR WORK METHODS.
3. CONTRACTOR SHALL OBTAIN SWPPP APPROVAL FROM JURISDICTIONAL AGENCIES INCLUDING DEQ AND ASCENSION PARISH.
4. CONTRACTOR SHALL MAINTAIN ALL EROSION CONTROL MEASURES THROUGHOUT THE DURATION OF THE PROJECT AND AFTER EVERY RAIN EVENT TO ENSURE SOIL SEDIMENTS DO NOT LEAVE THE SITE.

LEGEND

—— SF —— SILT FENCE

▬ SEDIMENT CHECK DAMN (HAY)

SHEET NUMBER 11

ASCENSION PARISH

PARISH	CONTROL SECTION	STATE PROJECT

DESIGNED	SJT
CHECKED	DJM
DETAILED	SJT
CHECKED	DJM
DATE	JUNE 2024
SHEET	SUGGESTED EROSION CONTROL

NO.	DATE	BY

SUGGESTED EROSION CONTROL

LA HWY 44 AT PARKER RD TEMPORARY TURN LANE

MCKIM&CREED
PROFESSIONAL SURVEYORS · PLANNERS
(225) 644-5523
www.mckimcreed.com
1022 S. Purpera Ave.
Gonzales, LA 70707-0298

<HILARIO> 06/25/24 8:44 AM I:\0839\0009\ENG\80-DRAWINGS\TEMP TURN LANE DESIGN\11 SUGGESTED EROSION CONTROL.DWG - 11 SUGGESTED EROSION CONTROL

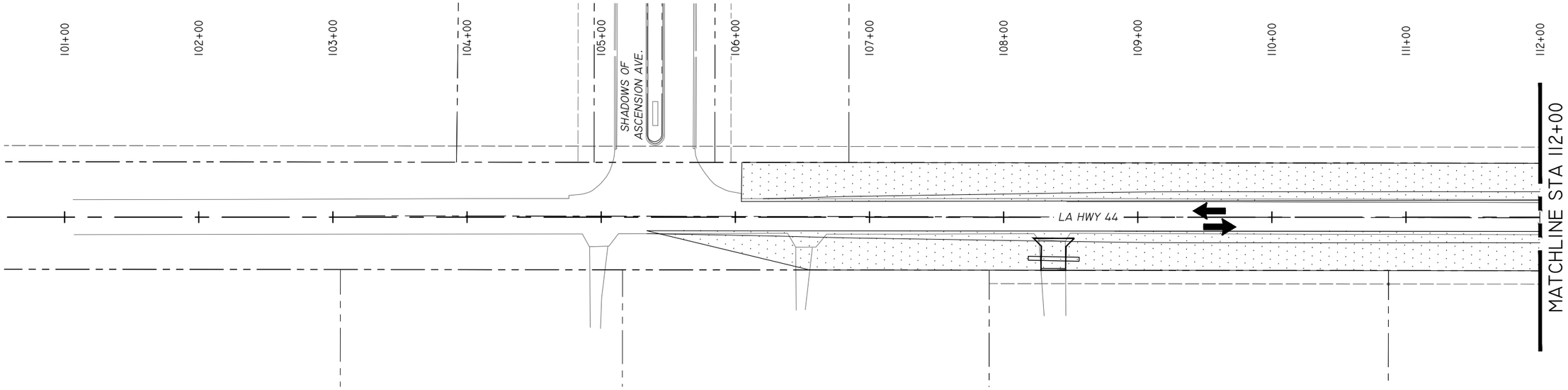

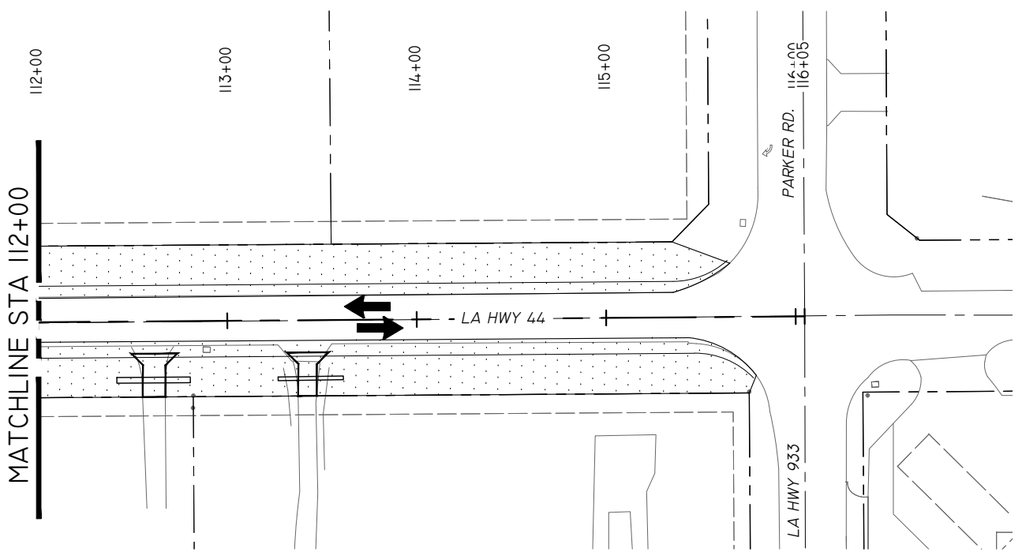

LEGEND

PERMANENT CONSTRUCTION THIS PHASE

TRAFFIC FLOW LOCATION AND DIRECTION

PHASE I:

1. MAINTAIN EXISTING TRAVEL LANES. PLACE TEMPORARY PAVEMENT MARKINGS, SIGNS, CHANNELIZING DEVICES, AND BARRICADES AS NEEDED.
2. CONSTRUCT DRAINAGE IMPROVEMENTS.
3. INSTALL NEW ROADWAY UP TO BINDER COURSE ALONG THE EAST AND WEST SIDE OF EXISTING EDGE OF PAVEMENT.
4. REMOVE/REPLACE DRIVES.

GENERAL NOTES:

1. SEQUENCE OF CONSTRUCTION IS SUGGESTED AND CAN BE CHANGED BY THE CONTRACTOR WITH THE APPROVAL OF THE PROJECT ENGINEER.
2. NOISE CONTROL: THE CONTRACTOR SHALL TAKE REASONABLE MEASURES TO PREVENT UNNECESSARY NOISE APPROPRIATE FOR AMBIENT SOUND LEVELS IN THE AREA DURING WORKING HOURS. ALL CONSTRUCTION MACHINERY SHALL BE EQUIPPED WITH PRACTICAL SOUND MUFFLING DEVICES AND OPERATED IN A MANNER TO CAUSE THE LEAST NOISE, CONSISTENT WITH EFFICIENT PERFORMANCE OF THE WORK.
3. ALL EDGE LINES, LANES LINES, AND CENTERLINES SHALL BE MARKED WITH THE APPROPRIATE COLORED MARKINGS. TEMPORARY MARKINGS SHALL BE REMOVABLE TAPE ON NEW PAVEMENT SURFACES AND EXISTING PAVEMENT SURFACES TO REMAIN UNLESS DIRECTED OTHERWISE BY PROJECT ENGINEER. ALL TEMPORARY STRIPING TAPE TO BE INSTALLED AS DIRECTED BY THE PROJECT ENGINEER. SHALL BE PAID FOR BY THE APPLICABLE TEMPORARY STRIPING PAY ITEM.
4. FOR ADDITIONAL INFORMATION, SEE LADOTD STANDARD FOR TEMPORARY TRAFFIC CONTROL PLANS.
5. ANY EXISTING PAVEMENT MARKINGS IN CONFLICT WITH TEMPORARY AND PERMANENT PAVEMENT MARKINGS SHALL BE REMOVED. ANY CONFLICTING PERMANENT SIGNING SHALL BE COVERED, TURNED FROM VIEW, OR REMOVED BY APPROVED METHODS.
6. THE CONTRACTOR SHALL HAVE UTILITIES WITHIN THE PROJECT LIMITS LOCATED AND MARKED PRIOR TO BEGINNING WORK. THE CONTRACTOR SHALL TAKE CARE IN AVOIDING DAMAGE TO EXISTING UTILITIES; DAMAGE TO EXISTING UTILITIES SHALL BE THE RESPONSIBILITY OF THE CONTRACTOR AND REPAIRS COMPLETED AT THE EXPENSE OF THE CONTRACTOR.
7. ALL EQUIPMENT AND MATERIALS STAGING AREAS AND CONSTRUCTION ENTRANCE LOCATIONS TO BE DETERMINED BY THE CONTRACOR, AND MUST BE APPROVED BY THE PROJECT ENGINEER BEFORE IMPLEMENTATION.
8. CONSTRUCTION ACTIVITIES SHALL BE COORDINATED TO ALLOW ONE LANE OPEN AT ALL TIMES USING FLAGGING WHEN NECESSARY. ACCESS TO ALL DRIVEWAYS & TURNOUTS SHOULD BE PROVIDED BY THE CONTRACTOR DURING ALL PHASES OF CONSTRUCTION.
9. 10' MINIMUM LANE WIDTH SHALL BE MAINTAINED AT ALL TIMES.
10. THE CONTRACTOR MUST MAINTAIN DRAINAGE SATISFACTORY TO THE PROJECT ENGINEER THROUGHOUT THE CONSTRUCTION OF THE PROJECT.
11. PLACE ADVANCED WARNING SIGNS PER LADOTD TEMPORARY TRAFFIC CONTROL STANDARD PLANS AND PER MUTCD PART 6. ADVANCED WARNING SIGNAGE SHALL REMAIN IN PLACE DURING ALL PHASES OF CONSTRUCTION.
12. SPACING BETWEEN CONES, TUBULAR MARKERS, DRUMS & BARRICADES SHOULD NOT EXCEED A DISTANCE EQUAL TO 1.0 TIMES THE SPEED LIMIT WHEN USED FOR TAPER CHANNELIZATION, AND A DISTANCE EQUAL TO 2.0 TIMES THE SPEED LIMIT WHEN USED FOR TANGENT CHANNELIZATION.

N

40 0 40 80

SCALE IN FEET

SHEET NUMBER 12

ASCENSION PARISH

PARISH	CONTROL SECTION	STATE PROJECT

DESIGNED	SJT
CHECKED	DJM
DETAILED	SJT
CHECKED	DJM
DATE	JUNE 2024
SHEET	SUGGESTED SEQUENCE OF CONSTRUCTION

NO.	DATE	BY

SUGGESTED SEQUENCE OF CONSTRUCTION

LA HWY 44 AT PARKER RD TEMPORARY TURN LANE

McKIM&CREED
(225) 644-5523
www.mckimcreed.com
1022 S. Purpera Ave.
Gonzales, LA 70707-0298

<HILARIO> 06/25/24 8:44 AM I:\08391\0009\ENG\80-DRAWINGS\TEMP TURN LANE DESIGN\12 SUGGESTED SEQUENCE OF CONSTRUCTION.DWG - 12 SUGGESTED SEQUENCE OF CONSTRUCTION

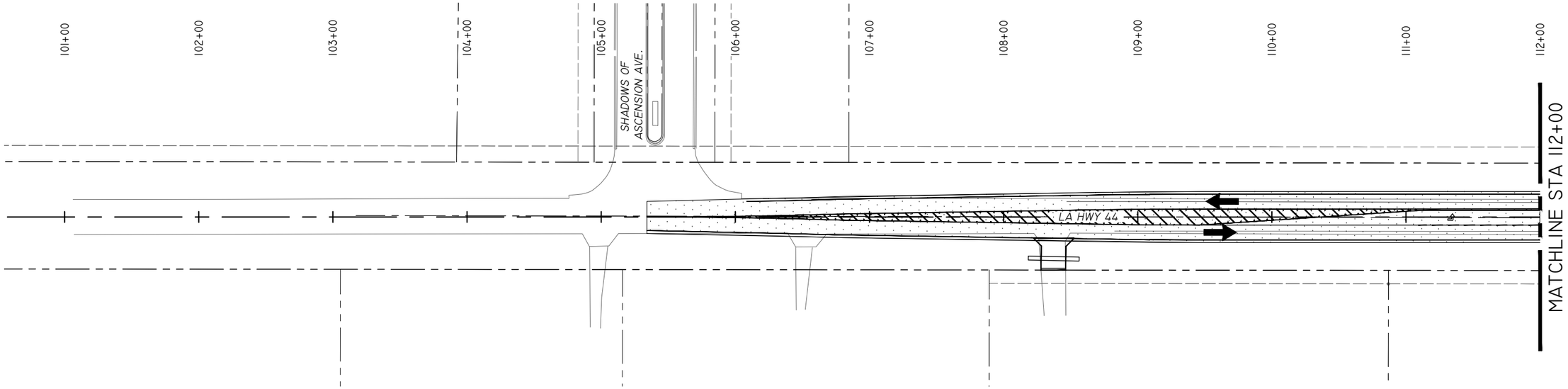

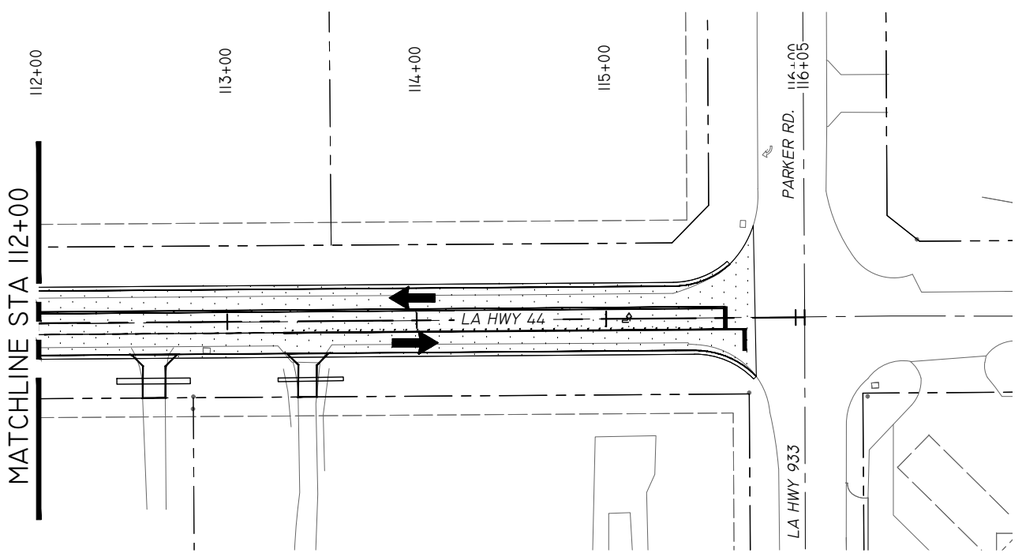

LEGEND

PERMANENT CONSTRUCTION THIS PHASE

TRAFFIC FLOW LOCATION AND DIRECTION

PHASE II:

1. MILL EXISTING PAVEMENT.
2. INSTALL WEARING COURSE.
3. INSTALL PERMANENT STRIPING AND SIGNAGE.

GENERAL NOTES:

1. SEQUENCE OF CONSTRUCTION IS SUGGESTED AND CAN BE CHANGED BY THE CONTRACTOR WITH THE APPROVAL OF THE PROJECT ENGINEER.
2. NOISE CONTROL: THE CONTRACTOR SHALL TAKE REASONABLE MEASURES TO PREVENT UNNECESSARY NOISE APPROPRIATE FOR AMBIENT SOUND LEVELS IN THE AREA DURING WORKING HOURS. ALL CONSTRUCTION MACHINERY SHALL BE EQUIPPED WITH PRACTICAL SOUND MUFFLING DEVICES AND OPERATED IN A MANNER TO CAUSE THE LEAST NOISE, CONSISTENT WITH EFFICIENT PERFORMANCE OF THE WORK.
3. ALL EDGE LINES, LANES LINES, AND CENTERLINES SHALL BE MARKED WITH THE APPROPRIATE COLORED MARKINGS. TEMPORARY MARKINGS SHALL BE REMOVABLE TAPE ON NEW PAVEMENT SURFACES AND EXISTING PAVEMENT SURFACES TO REMAIN UNLESS DIRECTED OTHERWISE BY PROJECT ENGINEER. ALL TEMPORARY STRIPING TAPE TO BE INSTALLED AS DIRECTED BY THE PROJECT ENGINEER. SHALL BE PAID FOR BY THE APPLICABLE TEMPORARY STRIPING PAY ITEM.
4. FOR ADDITIONAL INFORMATION, SEE LADOTD STANDARD FOR TEMPORARY TRAFFIC CONTROL PLANS.
5. ANY EXISTING PAVEMENT MARKINGS IN CONFLICT WITH TEMPORARY AND PERMANENT PAVEMENT MARKINGS SHALL BE REMOVED. ANY CONFLICTING PERMANENT SIGNING SHALL BE COVERED, TURNED FROM VIEW, OR REMOVED BY APPROVED METHODS.
6. THE CONTRACTOR SHALL HAVE UTILITIES WITHIN THE PROJECT LIMITS LOCATED AND MARKED PRIOR TO BEGINNING WORK. THE CONTRACTOR SHALL TAKE CARE IN AVOIDING DAMAGE TO EXISTING UTILITIES; DAMAGE TO EXISTING UTILITIES SHALL BE THE RESPONSIBILITY OF THE CONTRACTOR AND REPAIRS COMPLETED AT THE EXPENSE OF THE CONTRACTOR.
7. ALL EQUIPMENT AND MATERIALS STAGING AREAS AND CONSTRUCTION ENTRANCE LOCATIONS TO BE DETERMINED BY THE CONTRACOR, AND MUST BE APPROVED BY THE PROJECT ENGINEER BEFORE IMPLEMENTATION.
8. CONSTRUCTION ACTIVITIES SHALL BE COORDINATED TO ALLOW ONE LANE OPEN AT ALL TIMES USING FLAGGING WHEN NECESSARY. ACCESS TO ALL DRIVEWAYS & TURNOUTS SHOULD BE PROVIDED BY THE CONTRACTOR DURING ALL PHASES OF CONSTRUCTION.
9. 10' MINIMUM LANE WIDTH SHALL BE MAINTAINED AT ALL TIMES.
10. THE CONTRACTOR MUST MAINTAIN DRAINAGE SATISFACTORY TO THE PROJECT ENGINEER THROUGHOUT THE CONSTRUCTION OF THE PROJECT.
11. PLACE ADVANCED WARNING SIGNS PER LADOTD TEMPORARY TRAFFIC CONTROL STANDARD PLANS AND PER MUTCD PART 6. ADVANCED WARNING SIGNAGE SHALL REMAIN IN PLACE DURING ALL PHASES OF CONSTRUCTION.
12. SPACING BETWEEN CONES, TUBULAR MARKERS, DRUMS & BARRICADES SHOULD NOT EXCEED A DISTANCE EQUAL TO 1.0 TIMES THE SPEED LIMIT WHEN USED FOR TAPER CHANNELIZATION, AND A DISTANCE EQUAL TO 2.0 TIMES THE SPEED LIMIT WHEN USED FOR TANGENT CHANNELIZATION.

N

40 0 40 80

SCALE IN FEET

SHEET NUMBER 13

ASCENSION PARISH

PARISH	ASCENSION PARISH
CONTROL SECTION	
STATE PROJECT	
DESIGNED	S.J.T
CHECKED	D.J.M
DETAILED	S.J.T
CHECKED	D.J.M
DATE	JUNE 2024
SHEET	SUGGESTED SEQUENCE OF CONSTRUCTION

NO.	DATE	BY

SUGGESTED SEQUENCE OF CONSTRUCTION

LA HWY 44 AT PARKER RD TEMPORARY TURN LANE

McKIM&CREED
(225) 644-5523
www.mckimcreed.com
1022 S. Purpera Ave.
Gonzales, LA 70707-0298

<HILARIO> 06/25/24 8:44 AM I:\0839\0009\ENG\80-DRAWINGS\TEMP TURN LANE DESIGN\13 SUGGESTED SEQUENCE OF CONSTRUCTION.DWG - 13 SUGGESTED SEQUENCE OF CONSTRUCTION

09:45

10/23/2023

GENERAL NOTES :

1. REINFORCED CONCRETE PIPE AND FLEXIBLE PIPE ARE SHOWN AS TYPICAL STRUCTURES. DETAILS ALSO APPLY TO REINFORCED CONCRETE BOX CULVERT, REINFORCED CONCRETE PIPE ARCH, CORRUGATED METAL PIPE ARCH, AND CORRUGATED STRUCTURAL PLATE STRUCTURES.
2. CONSTRUCTION COVER REQUIREMENTS MAY EXCEED FINAL COVER.
3. CROSS DRAIN DETAILS APPLY TO ALL REACHES OF PIPE UNDER RIGID OR FLEXIBLE ROADWAYS.
4. FOR STRUCTURES INSTALLED OUTSIDE THE LIMITS OF THE ROADWAY, THE 12" OF FINAL BACKFILL ABOVE TYPE B BACKFILL UP TO THE EXISTING GROUND SHALL BE PLASTIC SOIL BLANKET MATERIAL. IF THE EMBANKMENT TO BE INSTALLED IS GREATER THAN 12" ABOVE EXISTING GROUND IN THE AREA OVER THE STRUCTURE, THEN THE PLASTIC SOIL BLANKET IS NOT REQUIRED AND TYPE B BACKFILL MAY EXTEND TO EXISTING GROUND.

Ø MINIMUM TRENCH CLEARANCE		
TYPE OF STRUCTURE	INSIDE DIAMETER	MIN. CLEARANCE
REINFORCED CONCRETE	ALL	18"
FLEXIBLE PIPE	<48"	18"
FLEXIBLE PIPE	≥48"	24"

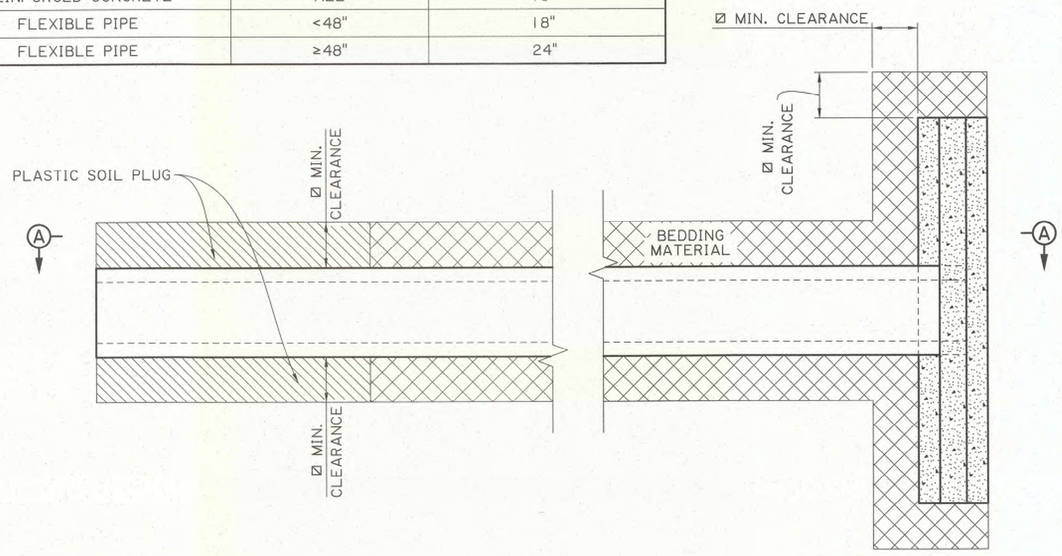

TYPICAL CROSS DRAIN INSTALLATION

WITH AND WITHOUT HEADWALL
(EMBANKMENT MATERIAL NOT SHOWN FOR CLARITY)
NTS

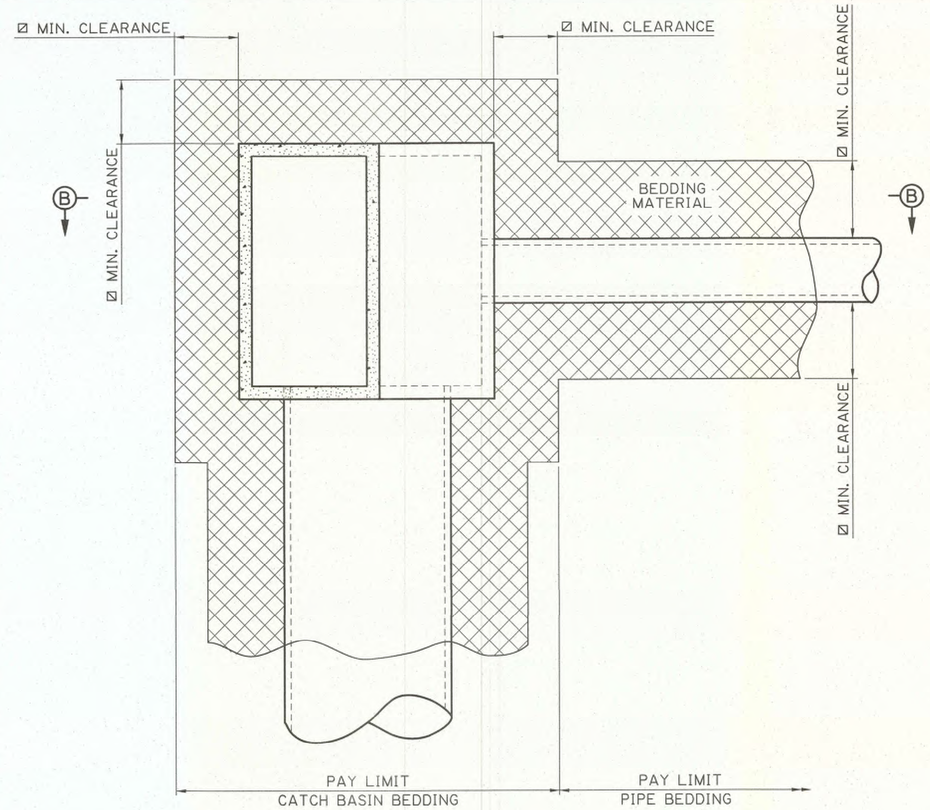

TYPICAL CATCH BASIN AND STORM DRAIN INSTALLATION

NTS

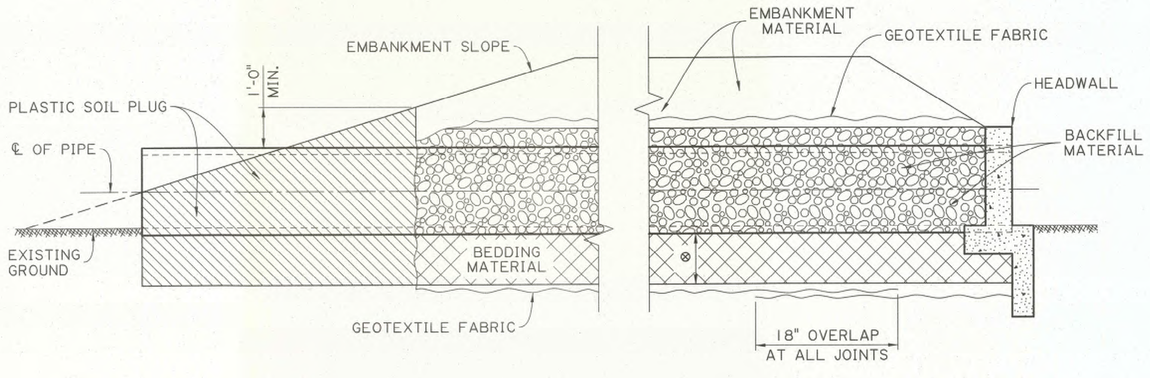

SECTION A-A

WITH AND WITHOUT HEADWALL
NTS

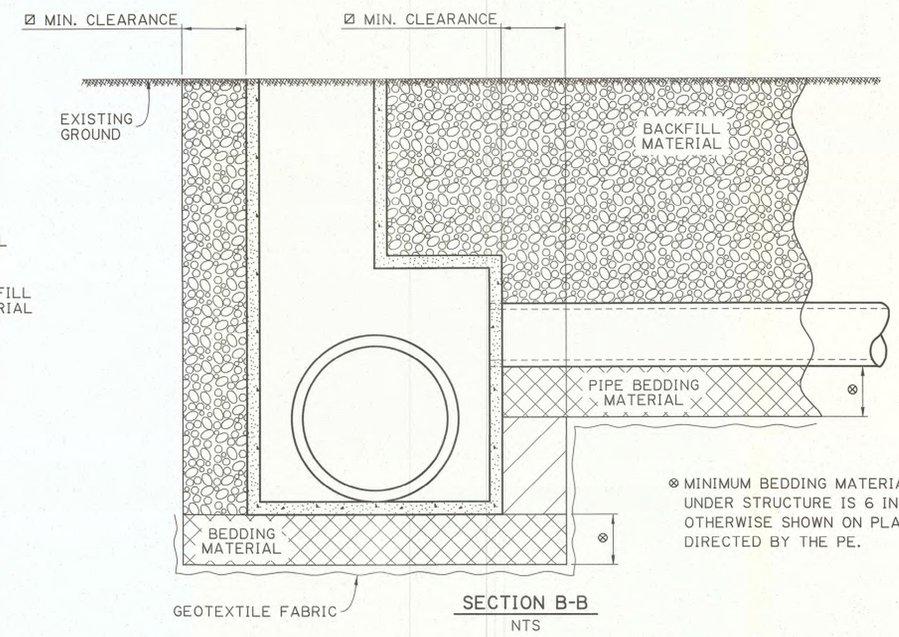

⊗ MINIMUM BEDDING MATERIAL THICKNESS UNDER STRUCTURE IS 6 INCHES UNLESS OTHERWISE SHOWN ON PLANS OR AS DIRECTED BY THE PE.

SECTION B-B

NTS

SHEET NUMBER 200

PARISH | CONTROL SECTION | STATE PROJECT

DESIGN C. NICKEL | CHECK J. RAUSER | DETAIL L. HASTINGS | CHECK A. NICKEL | REVIEW C. NICKEL | SERIES # 1 OF 2

STATE OF LOUISIANA
CHRISTOPHER J. NICKEL
License No. 30572
PROFESSIONAL ENGINEER
IN
CIVIL ENGINEERING
10/23/2023

APPROVED BY CHIEF ENGINEER:
DATE: 10/26/2023

DRAINAGE STRUCTURES
BEDDING & BACKFILL

STANDARD PLAN BM-01

DOTD
LOUISIANA DEPARTMENT OF TRANSPORTATION & DEVELOPMENT
PAVEMENT & GEOTECHNICAL SERVICES

⌀ MINIMUM TRENCH CLEARANCE		
TYPE OF STRUCTURE	INSIDE DIAMETER	MIN. CLEARANCE
REINFORCED CONCRETE	ALL	18"
FLEXIBLE PIPE	<48"	18"
FLEXIBLE PIPE	≥48"	24"

⊗ MINIMUM BEDDING MATERIAL THICKNESS UNDER STRUCTURE IS 6 INCHES UNLESS OTHERWISE SHOWN ON PLANS OR AS DIRECTED BY THE PE.

△ NO BEDDING MATERIAL REQUIRED UNLESS OTHERWISE SPECIFIED ON THE PLANS OR AS DIRECTED BY THE PE.

⊛ REFER TO NOTE 3 ON SHEET 1 OF THIS SERIES.

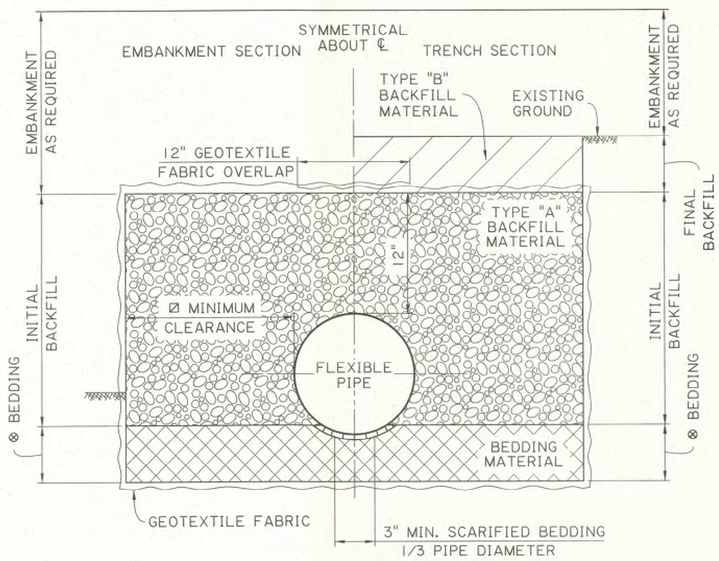

FLEXIBLE PIPE CROSS DRAIN

TRENCH AND EMBANKMENT INSTALLATIONS
SCALE: 1½"=1'-0"

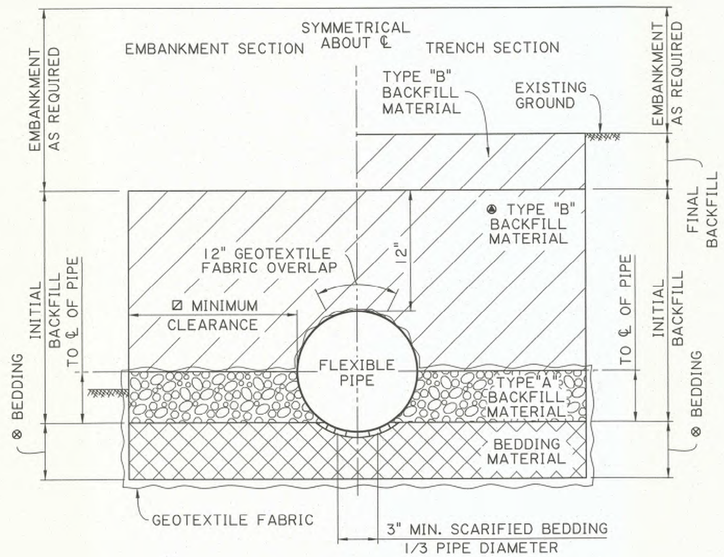

FLEXIBLE PIPE STORM DRAIN

TRENCH AND EMBANKMENT INSTALLATIONS
SCALE: 1½"=1'-0"

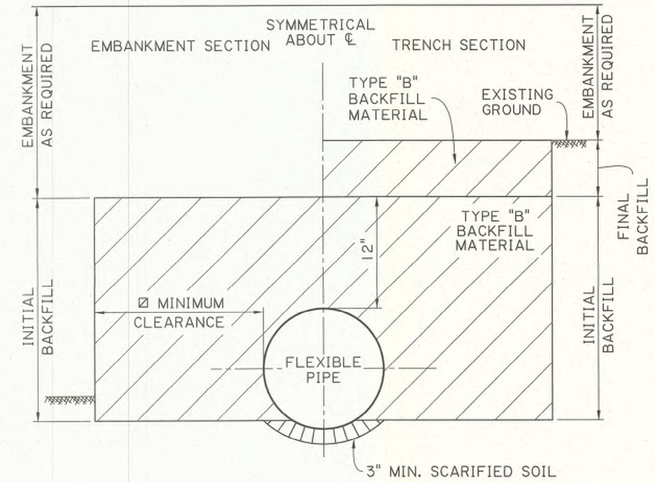

△ FLEXIBLE PIPE SIDE DRAIN

TRENCH AND EMBANKMENT INSTALLATIONS
SCALE: 1½"=1'-0"

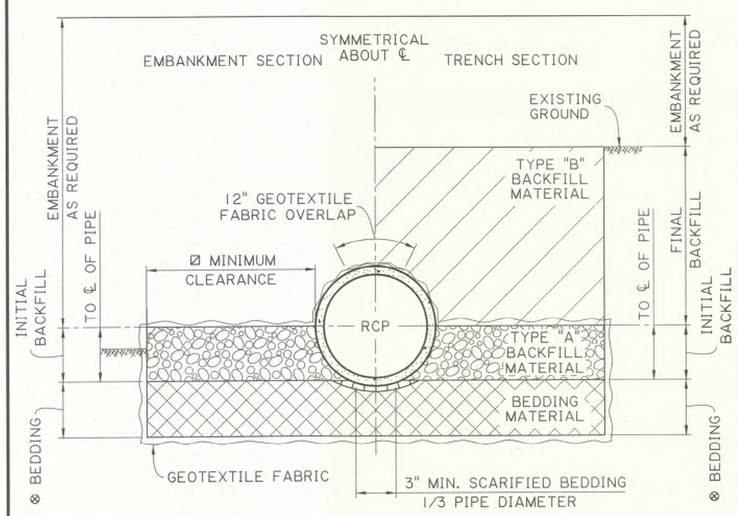

REINFORCED CONCRETE PIPE CROSS DRAIN

TRENCH AND EMBANKMENT INSTALLATIONS
SCALE: 1½"=1'-0"

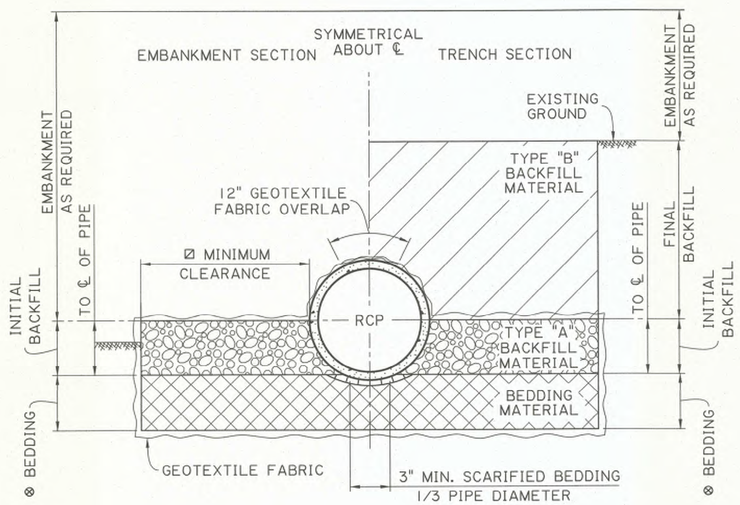

REINFORCED CONCRETE PIPE STORM DRAIN

TRENCH AND EMBANKMENT INSTALLATIONS
SCALE: 1½"=1'-0"

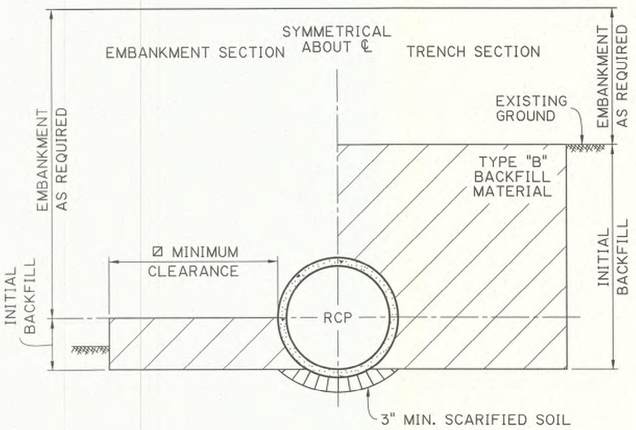

△ REINFORCED CONCRETE PIPE SIDE DRAIN

TRENCH AND EMBANKMENT INSTALLATIONS
SCALE: 1½"=1'-0"

SHEET NUMBER 201

PARISH | CONTROL SECTION | STATE PROJECT

DESIGN C. NICKEL | CHECK J. RAUSER | DETAIL L. HASTINGS | CHECK A. NICKEL | REVIEW C. NICKEL | SERIES # 2 OF 2

STATE OF LOUISIANA
CHRISTOPHER J. NICKEL
License No. 30572
PROFESSIONAL ENGINEER
IN CIVIL ENGINEERING
10/23/2023

APPROVED BY CHIEF ENGINEER:
DATE: 10/26/2023

STATE OF LOUISIANA

DRAINAGE STRUCTURES

TYPICAL SECTIONS FOR CROSS DRAINS & SIDE DRAINS

STANDARD PLAN BM-01

DOTD
LOUISIANA DEPARTMENT OF TRANSPORTATION & DEVELOPMENT

PAVEMENT & GEOTECHNICAL SERVICES

10/23/2023 09:18

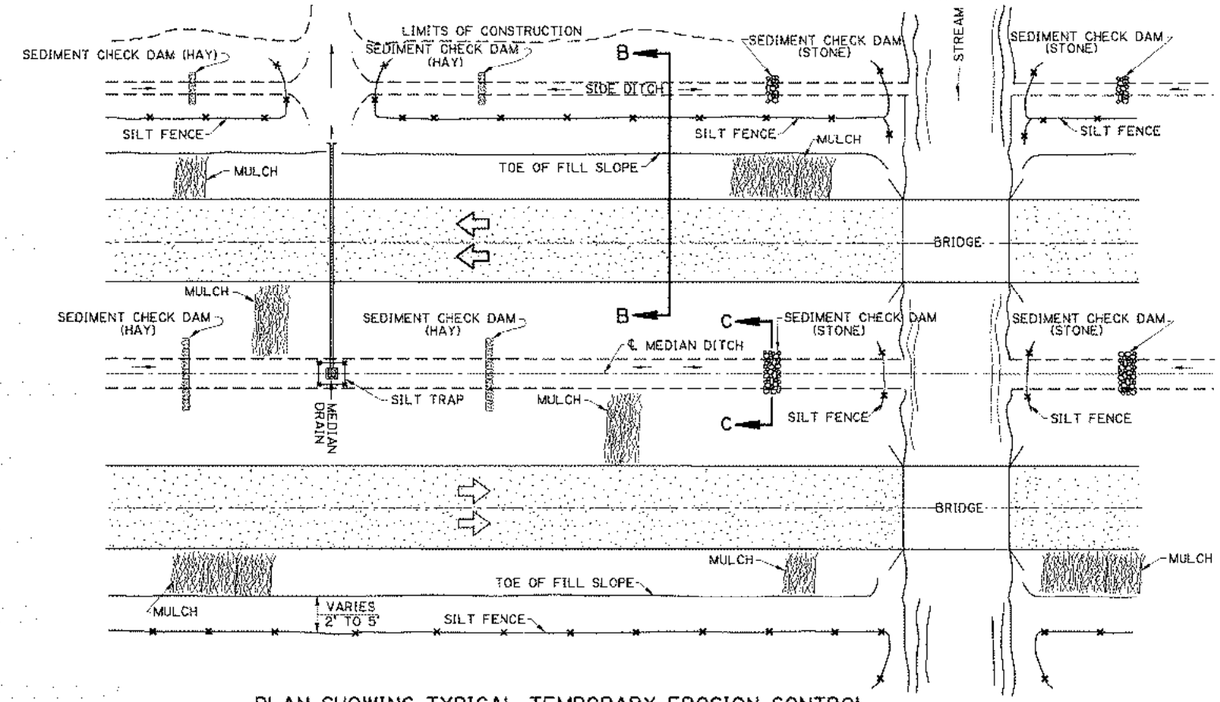

PLAN SHOWING TYPICAL TEMPORARY EROSION CONTROL

MULCHES

MULCHES ARE THE APPLICATION OF MATS OF MATERIAL PLACED ON THE SOIL SURFACE TO PREVENT EROSION BY PROTECTING THE SOIL SURFACE FROM RAINDROP IMPACT AND TO REDUCE THE VELOCITY OF OVERLAND FLOW. MULCHES CAN BE ORGANIC OR SYNTHETIC. MULCHES SHALL BE IN ACCORDANCE WITH PROJECT SPECIFICATIONS FOR TEMPORARY EROSION CONTROL. A FEW GUIDELINES FOR THE USE OF MULCHES ARE:

1. USE ON CUT AND EMBANKMENT SLOPES WHICH HAVE NOT BEEN COMPLETED TO PLAN GRADE OR WHERE THE WEATHER OR SOIL CONDITIONS WILL NOT PERMIT COMPLETING THEM WITHIN A REASONABLE TIME
2. USE ON CLEARED, GRUBBED , AND SCALPED AREAS WHERE SOIL EROSION IS LIKELY TO OCCUR
3. USE WITH TEMPORARY SEEDING

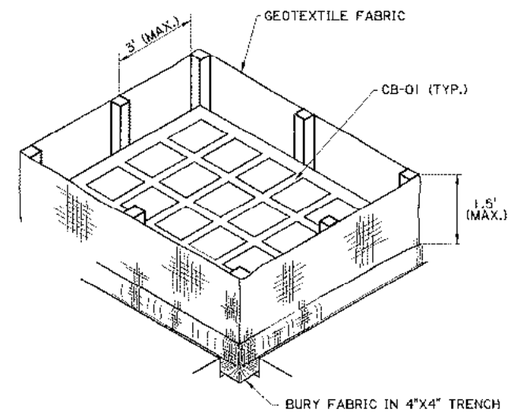

ISOMETRIC VIEW SHOWING GEOTEXTILE FABRIC

(BACKFILL SOIL NOT SHOWN)

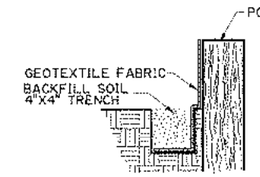

SECTION THRU TRENCH SHOWING GEOTEXTILE FABRIC

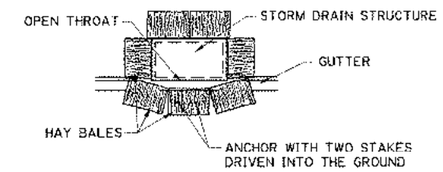

PLAN SHOWING HAY BALES

PAY ITEM: TEMPORARY HAY OR STRAW BALES

TEMPORARY INLET SILT TRAP

THE TEMPORARY DROP INLET SILT TRAP IS TO BE USED FOR SMALL DRAINAGE AREAS (LESS THAN 1 ACRE) WHERE THE STORM DRAIN IS FUNCTIONAL BEFORE THE AREA IS STABILIZED. THE TRAP CAN BE EITHER GEOTEXTILE FABRIC OR HAY BALES.

1. THE GEOTEXTILE FABRIC SHALL CONFORM TO PROJECT SPECIFICATIONS FOR GEOTEXTILE FABRIC (CLASS G).
2. WOODEN STAKES SUPPORTING THE FABRIC SHALL BE 2" X 2" OR 2" X 4" WITH A MINIMUM LENGTH OF 3 FEET. THE STAKES SHALL BE SPACED AROUND THE INLET AT A MAXIMUM SPACING OF 3 FEET.
3. THE HEIGHT OF THE FABRIC ABOVE THE INLET SHALL BE LIMITED TO 1.5' AND THE BOTTOM OF THE FABRIC SHALL BE BURIED IN A TRENCH APPROXIMATELY 4" WIDE BY 4" DEEP. THE FABRIC SHALL BE STAPLED TO THE POST WITH ½" STAPLES.
4. THE TRAP SHOULD BE INSPECTED REGULARLY AND AFTER EACH STORM. THE SEDIMENT SHOULD BE REMOVED AND EACH STAKE SHOULD BE FIRMLY IN THE GROUND.
5. HAY BALES SHALL BE PLACED SO THAT THE BINDING WIRE OR TWINE IS NOT IN CONTACT WITH THE GROUND.

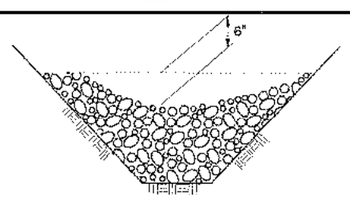

SECTION C-C

TEMPORARY SEDIMENT CHECK DAM (STONE)

PAY ITEM: TEMPORARY SEDIMENT CHECK DAM (STONE)

NOTES:
A STONE CHECK DAM IS A SMALL TEMPORARY DAM CONSTRUCTED ACROSS A SWALE OR DRAINAGE DITCH. THE PURPOSE OF THIS MEASURE IS TO REDUCE THE VELOCITY OF CONCENTRATED STORM WATER FLOWS, THEREBY REDUCING EROSION OF THE SWALE OR DITCH. THE STONE CHECK DAM WILL TRAP SMALL AMOUNTS OF SEDIMENTS GENERATED IN THE DITCH ITSELF, HOWEVER IT SHOULD NOT BE USED AS A SEDIMENT TRAPPING DEVICE. A FEW BASIC DESIGN GUIDELINES FOR THE USE OF STONE CHECK DAMS ARE:

1. USE IN SMALL OPEN CHANNELS WHICH DRAIN 10 ACRES OR LESS
2. DO NOT USE IN A LIVE STREAM
3. USE IN A TEMPORARY DITCH OR SWALE WHICH, BECAUSE OF THEIR SHORT LENGTH OF SERVICE, CANNOT RECEIVE A NON- ERODIBLE LINING
4. USE IN PERMANENT DITCHES OR SWALES WHICH WILL NOT RECEIVE A PERMANENT LINING FOR AN EXTENDED PERIOD OF TIME
5. USE IN TEMPORARY OR PERMANENT DITCHES OR SWALES WHICH NEED PROTECTION DURING THE ESTABLISHMENT OF GRASS LININGS
6. FOR STONE SPECIFICATIONS, SEE PROJECT SPECIFICATIONS FOR RIPRAP, (CLASS 2 LB)

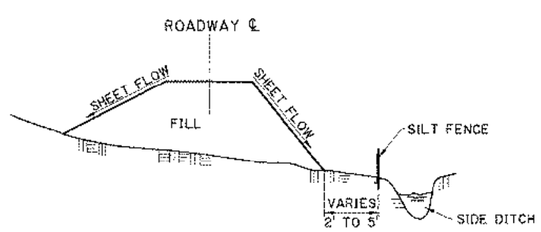

SECTION B-B

TEMPORARY SILT FENCE APPLICATION

(FOR CONSTRUCTION DETAILS AND SPECIFICATIONS SEE SHEET 2 OF 2.)

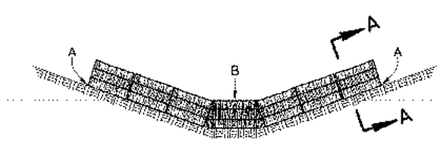

POINTS A SHOULD BE HIGHER THAN POINT B.

ELEVATION

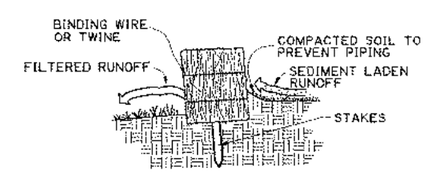

SECTION A-A

TEMPORARY SEDIMENT CHECK DAM (HAY)

PAY ITEM: TEMPORARY SEDIMENT CHECK DAM (HAY)

NOTES:
A HAY BALE BARRIER IS A TEMPORARY SEDIMENT BARRIER CONSISTING OF A ROW OF ENTRENCHED AND ANCHORED BALES OF STRAW OR HAY. THE HAY BALE BARRIER IS ALSO USED AS A CHECK DAM TO REDUCE THE VELOCITY IN SMALL DITCHES OR SWALES. THE HAY BALES SHALL BE IN ACCORDANCE WITH PROJECT SPECIFICATIONS FOR TEMPORARY EROSION CONTROL.
A FEW BASIC DESIGN GUIDELINES FOR THE USE OF A HAY BALE BARRIER ARE:

1. USE WHERE EROSION WOULD OCCUR IN THE FORM OF SHEET AND RILL EROSION
2. USE IN MINOR SWALES OR DITCHES WHERE THE MAXIMUM DRAINAGE AREA IS 2 ACRES
3. ONLY USE WHERE THE EFFECTIVENESS IS REQUIRED FOR LESS THAN 3 MONTHS
4. DO NOT USE IN LIVE STREAMS OR IN SWALES OR DITCHES WHERE THERE IS A POSSIBILITY OF A WASHOUT

DATE	REVISION DESCRIPTION
10-1-08	REMOVE SPECIFIC PAY ITEM NOS., GENERAL REVISIONS

DESIGNED JCM
CHECKED
DETAILED KAJ
CHECKED JCM
DATE 1-14-94
SHEET 1 OF 2
DATE 10-1-08

TEMPORARY EROSION CONTROL DETAILS

STANDARD TC-01

HYDRAULICS SECTION

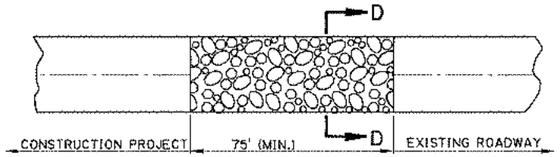

PLAN

SECTION D-D

TEMPORARY STONE CONSTRUCTION ENTRANCE

PAY ITEM: TEMPORARY STONE CONSTRUCTION ENTRANCE

NOTES:

TEMPORARY STONE CONSTRUCTION ENTRANCE AND/OR WASH RACK

A STONE STABILIZED PAD LOCATED AT POINTS OF VEHICULAR INGRESS AND EGRESS ON THE CONSTRUCTION SITE TO REDUCE THE AMOUNT OF MUD TRANSPORTED ONTO PUBLIC ROADS. IF THE ACTION OF THE VEHICLE TRAVELING OVER THE GRAVEL PAD IS NOT SUFFICIENT TO REMOVE THE MAJORITY OF THE MUD, THEN THE TIRES MUST BE WASHED BEFORE THE VEHICLE ENTERS A PUBLIC ROAD. A FEW BASIC DESIGN GUIDELINES FOR THE USE OF A STONE ENTRANCE AND/OR WASH RACKS ARE:

1. THE STONE LAYER MUST BE AT LEAST 6 INCHES THICK.
2. THE STONE SHALL CONFORM TO PROJECT SPECIFICATIONS FOR RIPRAP (CLASS 2 LB).
3. THE LENGTH OF THE PAD MUST BE A LEAST 75 FEET AND IT MUST EXTEND THE FULL WIDTH OF THE VEHICULAR INGRESS AND EGRESS.
4. A GEOTEXTILE FABRIC UNDERLINER IS REQUIRED. THE GEOTEXTILE FABRIC SHALL BE IN ACCORDANCE WITH PROJECT SPECIFICATIONS FOR GEOTEXTILE FABRIC (CLASS D).
5. IF A WASH RACK IS NECESSARY, PROVISIONS MUST BE MADE TO INTERCEPT THE WASH WATER AND TRAP THE SEDIMENT BEFORE IT IS CARRIED OFF-SITE.

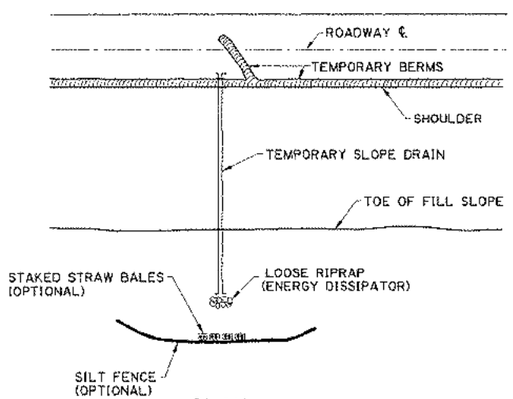

PLAN

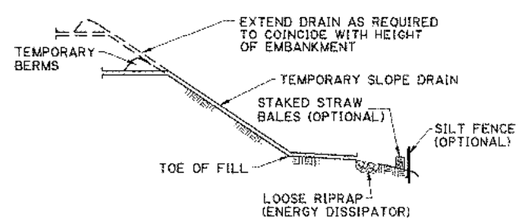

ELEVATION

TEMPORARY SLOPE DRAIN

A TEMPORARY SLOPE DRAIN IS A DEVICE USED TO CARRY WATER FROM THE CONSTRUCTION WORK AREA TO A LOWER ELEVATION. SLOPE DRAINS MAY BE PLASTIC SHEET, METAL OR PLASTIC PIPE, STONE GUTTERS, FIBER MATS, OR CONCRETE OR ASPHALT DITCHES. A FEW BASIC DESIGN GUIDELINES FOR THE USE OF A TEMPORARY SLOPE DRAIN ARE:

1. THE SPACING OF THE SLOPE DRAINS VARIES WITH THE ROAD GRADE.
   FOR GRADES: 0.0% - 2.0% USE 500' SPACING
   2.1% - 5.0% USE 200' SPACING
   GREATER THAN 5.0% USE 100' SPACING
2. SLOPE DRAIN MATERIAL: SMOOTH PIPE - 8" MINIMUM - 3 MILS THICK MIN.
   CORRUGATED PIPE - 12" MINIMUM
   PLASTIC SHEETING - 4' WIDE MINIMUM
   PLASTIC SHEETING - 3 MILS THICK MIN.
3. PLASTIC SHEETING CAN BE STAKED DOWN OR WEIGHTED WITH ROCKS OR LOGS. THE AREA UNDER THE SHEETING SHOULD BE SHAPED TO PROVIDE AN ADEQUATE CHANNEL.
4. THE OUTLET END SHOULD BE PROTECTED OR HAVE SOME MEANS OF DISSIPATING ENERGY. THE FLOW SHOULD BE DIRECTED THROUGH A SEDIMENT TRAP SUCH AS A SILT FENCE, HAY BALES, OR OTHER APPROVED SEDIMENT CONTROL DEVICES.
5. TO INSURE PROPER OPERATION, TEMPORARY SLOPE DRAINS SHOULD BE INSPECTED REGULARLY AND AFTER EACH STORM, FOR CLOGGING OR DISPLACEMENT. EROSION AT THE OUTLET SHOULD BE CHECKED AND THE SILT TRAPS CLEANED IF NECESSARY.

1. SET POSTS AND EXCAVATE A 4" X 4" TRENCH UPSLOPE ALONG THE LINE OF POSTS.

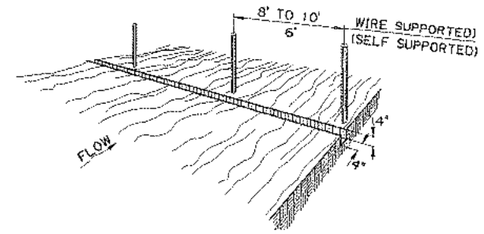

2. STAPLE WIRE FENCING TO THE POSTS.

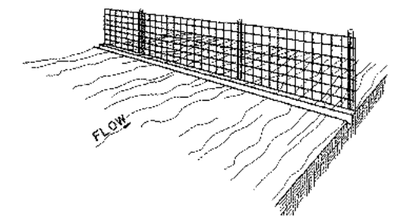

3. ATTACH THE FILTER FABRIC TO THE WIRE FENCE AND EXTEND IT INTO THE TRENCH.

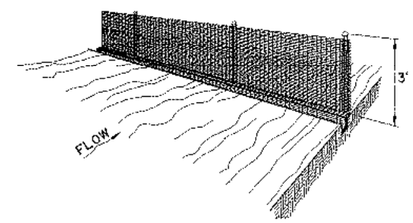

4. BACKFILL AND COMPACT EXCAVATED SOIL.

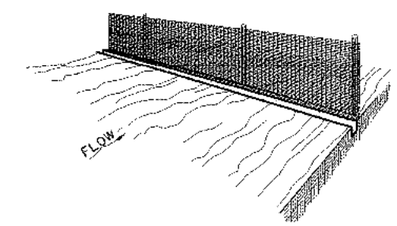

EXTENSION OF FABRIC INTO THE TRENCH.

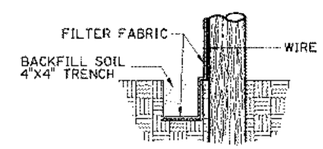

CONSTRUCTION OF TEMPORARY SILT FENCING

(WIRE SUPPORTED SILT FENCE IS SHOWN. SELF SUPPORTED SILT FENCE WILL BE CONSTRUCTED ACCORDING TO MANUFACTURERS SPECIFICATIONS.)

NOTES:

SILT FENCING IS A TEMPORARY SEDIMENT BARRIER CONSISTING OF A FILTER FABRIC SUPPORTED BY POSTS AND STRETCHED ACROSS AN AREA TO INTERCEPT AND DETAIN SMALL AMOUNTS OF SEDIMENT. THE SILT FENCING SHALL BE IN ACCORDANCE WITH PROJECT SPECIFICATIONS FOR TEMPORARY EROSION CONTROL. A FEW BASIC GUIDELINES FOR THE USE OF SILT FENCING ARE:

1. USE WHERE EROSION WOULD OCCUR IN THE FORM OF SHEET AND RILL EROSION
2. USE WHERE THE MAXIMUM DRAINAGE AREA BEHIND THE SILT FENCE IS ¼ ACRE PER 100 FEET OF SILT FENCE LENGTH
3. USE WHERE THE MAXIMUM SLOPE LENGTH BEHIND THE BARRIER IS 100 FEET
4. USE THERE THE MAXIMUM GRADIENT BEHIND THE BARRIER IS 2:1
5. DO NOT USE SILT FENCES IN LIVE STREAMS OR IN DITCHES OR SWALES WHERE FLOWS EXCEED ONE CUBIC FOOT PER SECOND

SHEET NUMBER 203

DESIGNED JCM
CHECKED
DETAILED KAJ
CHECKED JCM
DATE 1-14-94
SCALE 2 OF 2

10-1-08 REMOVE SPECIFIC PAY ITEM NOS., GENERAL REVISIONS MH
DATE REVISION DESCRIPTION BY

APPROVED BY
CHIEF ENGINEER

TEMPORARY EROSION CONTROL DETAILS

STANDARD NO. EC-01

HYDRAULICS SECTION

R:\Unit022\Driveway Standards\DRIVEWAY STANDARDS UPDATE - Aidan Eymard 2021\MicroStation Files\DW01 NEWEST.dgn 8/2/2022 08:53

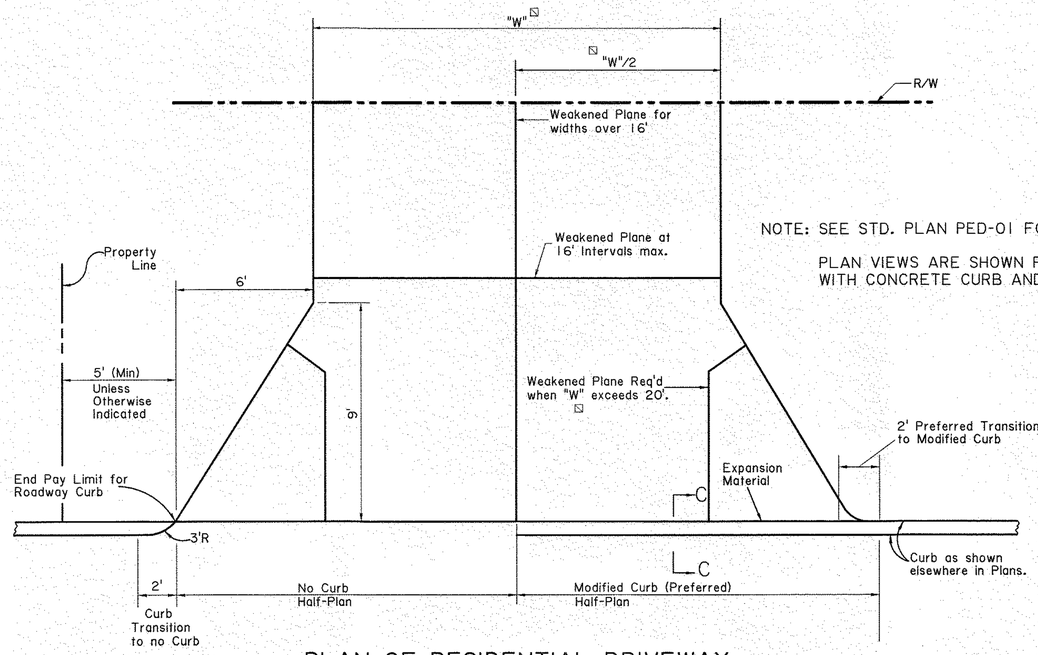

PLAN OF RESIDENTIAL DRIVEWAY

NOTE: SEE STD. PLAN PED-01 FOR TREATMENT OF SIDEWALKS AT DRIVEWAYS.

PLAN VIEWS ARE SHOWN FOR PCC DRIVES. ASPHALT CONCRETE DRIVES WITH CONCRETE CURB AND GUTTER ARE SIMILAR.

NOTE: MODIFIED CURB TO BE PAID FOR AS CURB AND WILL BE USED AS SHOWN IN THE PLANS OR WHEN DIRECTED BY THE PROJECT ENGINEER.

RADII TRANSITION SHAPE MAY BE USED IN LIEU OF A FLARE.

⊠ "W" = Width as per plans

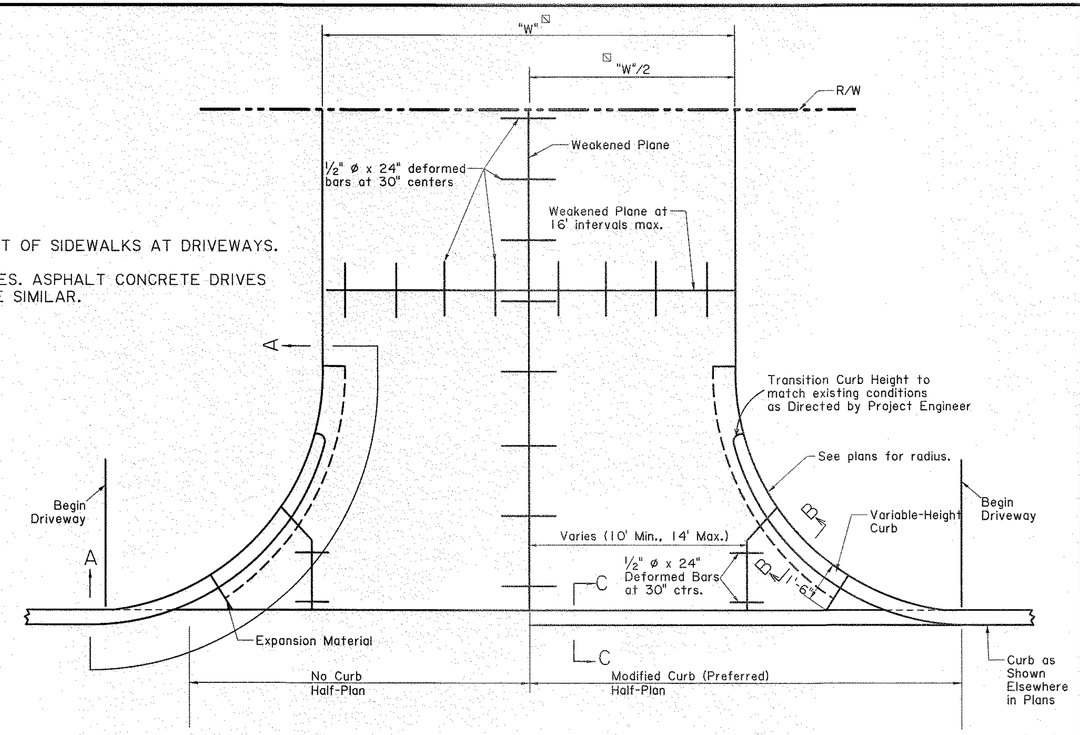

PLAN OF COMMERCIAL DRIVEWAY

NOTE: MODIFIED CURB TO BE PAID FOR AS CURB AND WILL BE USED AS SHOWN IN THE PLANS OR WHEN DIRECTED BY THE PROJECT ENGINEER.

WHEN CURB IS REQUIRED ALONG RADII OF DRIVEWAY, PAYMENT FOR TOE WALL AND CURB WILL BE INCLUDED IN THE PRICE FOR DRIVEWAY ITEMS.

WHEN CURB IS NOT REQUIRED ALONG RADII, TRANSITION CURB AS SHOWN ON RESIDENTIAL DRIVEWAY.

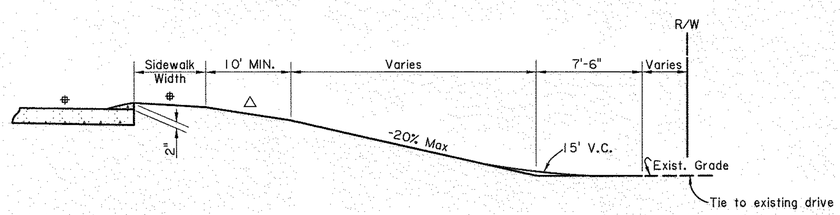

TYPICAL DRIVEWAY IN FILL

NOTES:

1. DRIVEWAY PROFILES SHOWN ASSUME A SIDEWALK ADJACENT TO THE CURB.
2. △ MAXIMUM DRIVEWAY GRADE SHALL BE 20% (25% FOR SPECIAL CASES). MAXIMUM BREAK IN GRADE WITHOUT A VERTICAL CURVE SHALL BE 10% FOR CRESTS AND 9% FOR SAGS, AT NOT LESS THAN 10' INTERVALS.
3. ⌖ ROADWAY AND SIDEWALK SLOPES VARY AS PER PLANS.

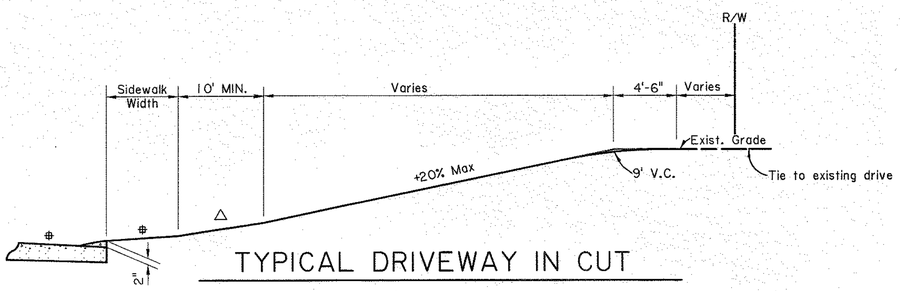

TYPICAL DRIVEWAY IN CUT

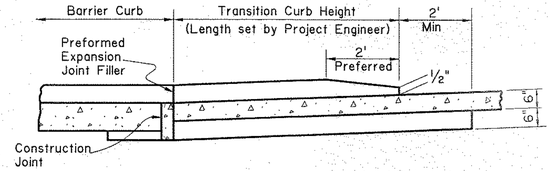

SECTION A-A

(Weakened Plane not shown.)

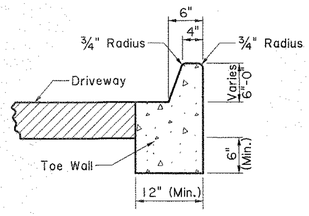

SECTION B-B

NOTE: For PCC Driveway, Curb, Toe Wall & Driveway to be poured monolithically.

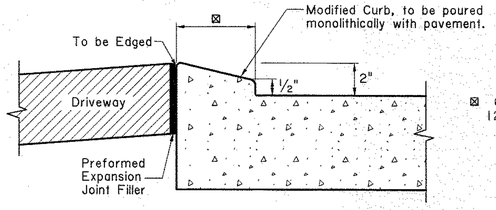

⊠ 6" to match Barrier Curb
12" to match Mountable Curb

SECTION C-C

NOTE: See Std. Plan CP-01 for Curb construction

SHEET NUMBER	204

PARISH	CONTROL SECTION	STATE PROJECT

DESIGN	P. TONEY	DETAIL	P. TONEY
CHECK	R. MCMILLAN	CHECK	R. MCMILLAN
REVIEW	D. SMITH	SERIES #	1 OF 3

STATE OF LOUISIANA
AIDAN EYMARD
License No. 46220
PROFESSIONAL ENGINEER
IN
CIVIL ENGINEERING
8/2/2022

APPROVED BY CHIEF ENGINEER:
DATE: 8/4/2022

STATE OF LOUISIANA
DEPARTMENT OF TRANSPORTATION AND DEVELOPMENT

DRIVEWAYS ON CURBED ROADWAYS

STANDARD PLAN DW-01

DOTD
LOUISIANA DEPARTMENT OF TRANSPORTATION & DEVELOPMENT

STANDARD PLAN

R:\Unit022\Driveway Standards\DRIVEWAY STANDARDS UPDATE - Aidan Eymard 2021\MicroStation Files\DW02 NEWEST.dgn 8/2/2022 08:53

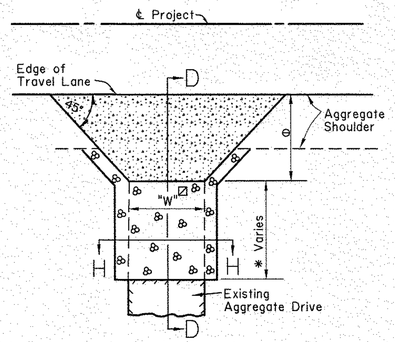

TYPE "A"

Paved Driveway Flare
Along Aggregate Shoulder

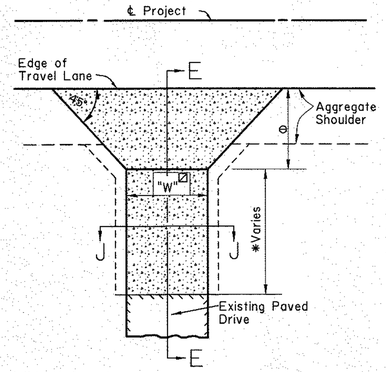

TYPE "B"

Paved Driveway Flare
Along Aggregate Shoulder
Connecting Existing Paved Drive

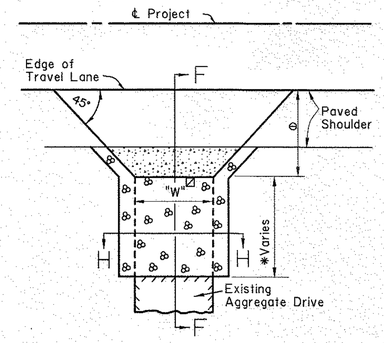

TYPE "C"

Paved Driveway Flare
Along Paved Shoulder

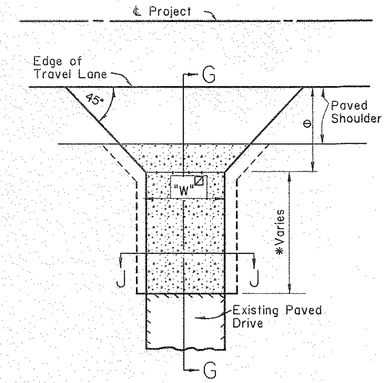

TYPE "D"

Paved Driveway Flare
Along Paved Shoulder
Connecting Existing Paved Drive

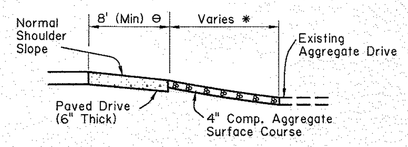

SECTION D-D

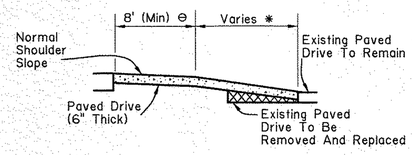

SECTION E-E

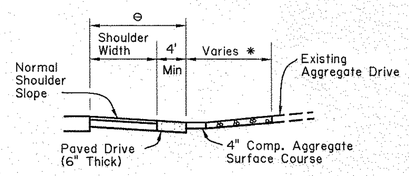

SECTION F-F

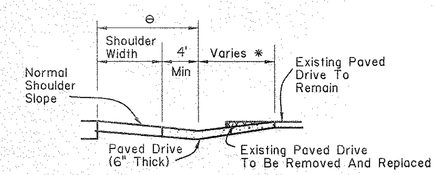

SECTION G-G

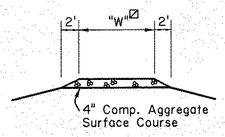

SECTION H-H

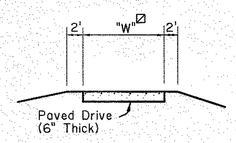

SECTION J-J

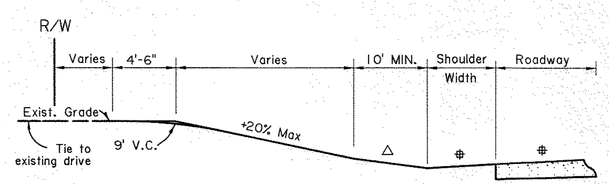

TYPICAL DRIVEWAY IN CUT

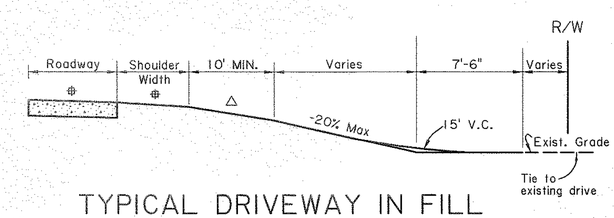

TYPICAL DRIVEWAY IN FILL

⊠ "W" = Width as per plans

NOTES:

1. PORTLAND CEMENT CONCRETE DRIVES WILL BE CONSTRUCTED TO REPLACE OR CONNECT TO EXISTING CONCRETE DRIVES.

* 2. SEE PLANS: APPLIES WHERE EXISTING DRIVE IS TO BE REMOVED FOR ROADWAY CONSTRUCTION AND/OR TO ACHIEVE VERTICAL GEOMETRY REQUIREMENTS.

⊖ 3. PAVEMENT SHALL EXTEND 8' MINIMUM FROM EDGE OF PAVED ROADWAY SURFACE (TRAVEL LANE) FOR SINGLE-FAMILY RESIDENTIAL/NON-COMMERCIAL AGRICULTURE TYPE CONNECTIONS, AND 25' FOR TRAFFIC GENERATOR (COMMERCIAL) TYPE CONNECTIONS, OR AS PER THE PLANS. PAVED DRIVEWAY FLARE SHALL EXTEND 4' MINIMUM FROM EDGE OF PAVED SHOULDER. RADII TRANSITION SHAPE MAY BE USED IN LIEU OF FLARE.

4. COMPACTION OF SUBGRADE AND GRADING WORK FOR CONSTRUCTION OF DRIVES SHALL BE SATISFACTORY TO THE ENGINEER AND PAYMENT SHALL BE INCLUDED IN THE DRIVEWAY ITEMS.

△ 5. MAXIMUM DRIVEWAY GRADE SHALL BE 20% (25% FOR SPECIAL CASES). MAXIMUM BREAK IN GRADE WITHOUT A VERTICAL CURVE SHALL BE 10% FOR CRESTS AND 9% FOR SAGS, AT NOT LESS THAN 10' INTERVALS.

⊕ 6. ROADWAY AND SHOULDER SLOPES VARY AS PER PLANS

LEGEND

ASPHALT

AGGREGATE

REMOVAL

SHEET NUMBER 205

PARISH | CONTROL SECTION | STATE PROJECT

DESIGN P. TONEY
CHECK R. MCMILLAN
DETAIL P. TONEY
CHECK R. MCMILLAN
REVIEW D. SMITH
SERIES # 2 OF 3

STATE OF LOUISIANA
AIDAN EYMARD
License No. 46220
PROFESSIONAL ENGINEER
IN
CIVIL ENGINEERING
8/2/2022

APPROVED BY CHIEF ENGINEER:
DATE: 8/4/2022

DRIVEWAYS ON NON-CURBED ROADWAYS

STANDARD PLAN DW-01

DOTD
LOUISIANA DEPARTMENT OF TRANSPORTATION & DEVELOPMENT

STANDARD PLAN

R:\Unit022\Driveway Standards\DRIVEWAY STANDARDS UPDATE - Aidan Eymard 2021\MicroStation Files\Turnout and Drive Tie In for Overlays.dgn 8/2/2022 08:50

TURNOUT TIE-IN DETAILS FOR OVERLAY PROJECTS

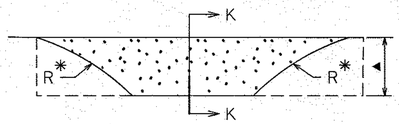

DETAIL OF APRON AT TURNOUT (TYPICAL)

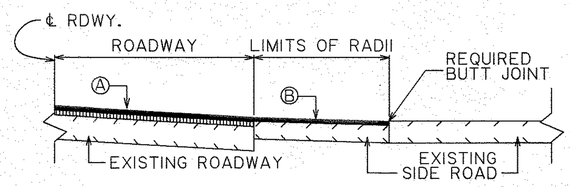

SECTION K-K (PAVED SIDE ROAD)

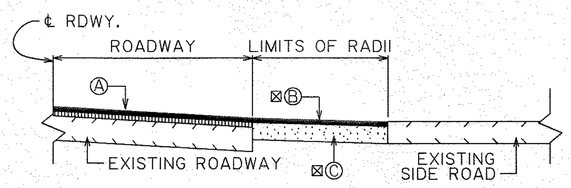

SECTION K-K (UNPAVED SIDE ROAD)

Ⓐ ASPHALT CONCRETE (COURSES AND TYPES SHOWN ON ROADWAY TYPICAL SECTION)

Ⓑ ASPHALT CONCRETE (THICKNESS SHALL MATCH ROADWAY WEARING SURFACE)

⊠Ⓒ ASPHALT CONCRETE BASE COURSE

* MATCH EXISTING RADIUS

▲ VERTICAL TRANSITION FROM ROADWAY TO BUTT JOINT TIE-IN WHERE NEEDED

⊠ TOTAL THICKNESS OF WEARING COURSE AND BASE COURSE SHALL BE A MINIMUM OF 6"

DRIVEWAY TIE-IN DETAILS FOR OVERLAY PROJECTS

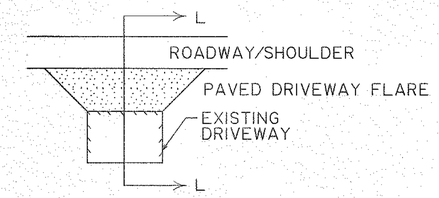

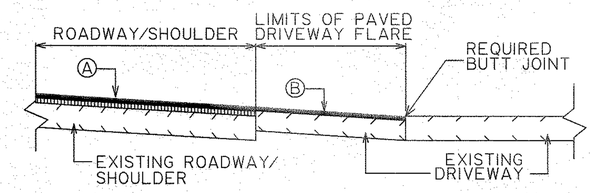

SECTION L-L (ALTERNATE 1)

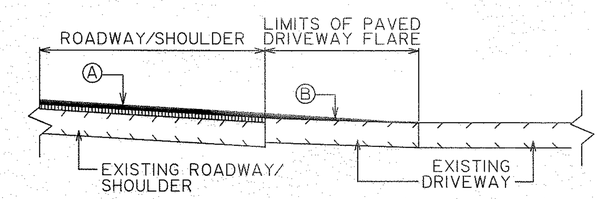

SECTION L-L (ALTERNATE 2)

Ⓐ ASPHALT CONCRETE (COURSES AND TYPES SHOWN ON ROADWAY TYPICAL SECTION)

Ⓑ ASPHALT CONCRETE (THICKNESS SHALL MATCH ROADWAY WEARING COURSE)

NOTES:

1. DRIVE WIDTHS AND FLARE DIMENSIONS TO BE ADJUSTED TO MATCH EXISTING CONDITIONS AS DIRECTED BY THE PROJECT ENGINEER.
2. TYPE OF TIE-IN AND LENGTH OF OVERLAY TRANSITION TO BE SET BY PROJECT ENGINEER TO ACHIEVE A SUITABLE CONNECTION FOR EXISTING DRIVE.
3. REFER TO SHEET 2 OF DW-01 FOR SUGGESTED TIE-IN CRITERIA OF STEEP GRADES.

SHEET NUMBER 206

PARISH | CONTROL SECTION | STATE PROJECT

DESIGN P. TONEY
CHECK R. MCMILLAN
DETAIL P. TONEY
CHECK R. MCMILLAN
REVIEW D. SMITH
SERIES # 3 OF 3

STATE OF LOUISIANA
AIDAN EYMARD
License No. 46220
PROFESSIONAL ENGINEER
IN
CIVIL ENGINEERING
8/2/2022

APPROVED BY CHIEF ENGINEER:
DATE: 8/4/2022

STATE OF LOUISIANA
DIVISION OF ADMINISTRATION
ENGINEERING

TURNOUT AND DRIVEWAY TIE-IN DETAILS

STANDARD PLAN DW-01

DOTD
LOUISIANA DEPARTMENT OF TRANSPORTATION & DEVELOPMENT

STANDARD PLAN

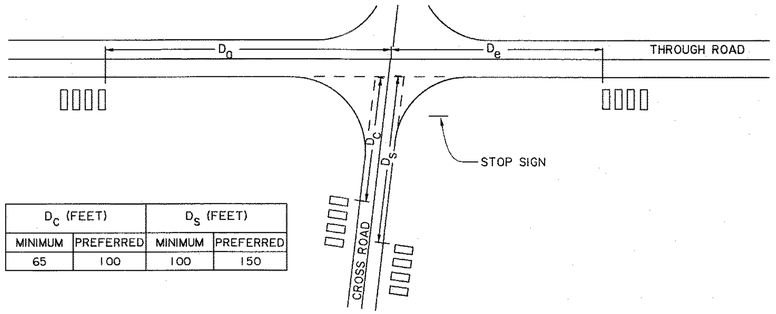

D_c (FEET)		D_s (FEET)	
MINIMUM	PREFERRED	MINIMUM	PREFERRED
65	100	100	150

THROUGH ROAD SPEED (M.P.H.)	D_a (FEET)		D_e (FEET)		
	$n\ V_c\ V_m \leq 4000$	$n\ V_c\ V_m > 4000$	$\frac{V_c}{1.5n-.5} \leq 50$	$50 < \frac{V_c}{1.5n-.5} \leq 400$	$\frac{V_c}{1.5n-.5} > 400$
35	65	200	65	100	100
≥ 55	65	295	150	150	200

V_c = AVERAGE DAILY TRAFFIC ON CROSS ROAD (VEHICLES PER DAY)

V_m = AVERAGE DAILY TRAFFIC ON THROUGH ROAD (VEHICLES PER DAY)

n = NUMBER OF MAILBOXES AT MAIL STOP

MINIMUM CLEARANCES TO NEAREST MAILBOX IN MAIL STOPS AT INTERSECTIONS

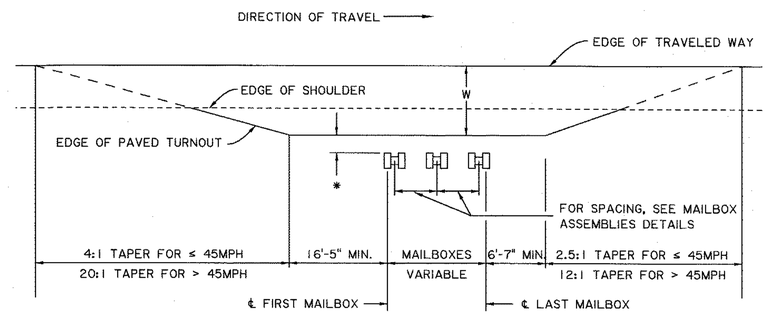

W = FOR SUGGESTED WIDTHS, SEE TABLE BELOW.
MAILBOXES = A MINIMUM DESIGN FOR ROADS CARRYING LOW-SPEED TRAFFIC AND FOR LOCAL AND COLLECTOR ROADS.
* = FOR MAILBOX FACE OFFSET, SEE TABLE BELOW, 0" - 12".

DETAIL OF MAILBOX TURNOUT

* SUGGESTED GUIDELINES FOR LATERAL PLACEMENT OF MAILBOXES

HIGHWAY TYPE AND ADT (VPD)	WIDTH OF ALL-WEATHER SURFACE TURNOUT OR AVAILABLE SHOULDER AT MAILBOX[a] (FT)		DISTANCE ROADSIDE FACE OF MAILBOX IS TO BE OFFSET BEHIND EDGE OF TURNOUT OR USABLE SHOULDER (IN)	
	PREFERRED	MINIMUM	PREFERRED	MINIMUM
RURAL HIGHWAY OVER 10,000	12	8	6 to 8	0
RURAL HIGHWAY 1,500 TO 10,000	12	8		
RURAL HIGHWAY 400 TO 1,500	10	8		
RURAL ROAD UNDER 400	8	6[b]		6[c]
RESIDENTIAL STREET WITHOUT CURB OR ALL-WEATHER SHOULDER	6	0		
CURBED RESIDENTIAL STREET OR URBAN AND SUBURBAN AREAS	NOT APPLICABLE		8 to 12[d]	6[d]

NOTES: ADT = AVERAGE DAILY TRAFFIC
VPD = VEHICLES PER DAY

a) IF INCREASE ACCESS IS NEEDED, THE FOLLOWING MAY BE CONSIDERED IN CONJUCTION WITH THE LOCAL POSTMASTER:
- PROVIDE A LEVEL CLEAR SPACE 30 IN. BY 48 IN. CENTERED ON THE BOX FOR EITHER SIDE OR FORWARD APPROACH.
- PROVIDE AN ACCESSIBLE PASSAGE TO AND FROM THE MAILBOX AND PROJECT INTO A CIRCULATION ROUTE--NO MORE THAN 4 IN. IF BETWEEN 28 IN. AND 80 IN.-- SO THAT THE MAILBOX DOES NOT BECOME A PROTRUDING OBJECT FOR PEDESTRIANS WITH IMPAIRED VISION.

b) PROVIDE AN ACCESSIBLE PASSAGE TO AND FROM THE MAILBOX. THE MAILBOX PROJECTION INTO A CIRCULATION ROUTE SHALL NOT BE MORE THAN 4 IN., SO THAT THE MAILBOX DOES NOT BECOME A PROTRUDING OBJECT FOR PEDESTRIANS WITH IMPAIRED VISION.

c) IF A TURNOUT IS PROVIDED, THIS MAY BE REDUCED TO ZERO.

d) BEHIND TRAFFIC-FACE OF CURB.

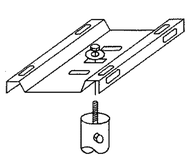

SINGLE MAILBOX MOUNT

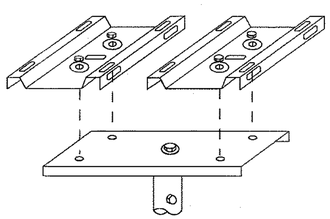

DOUBLE MAILBOX MOUNT

SINGLE AND DOUBLE MAILBOX MOUNTS SERIES C

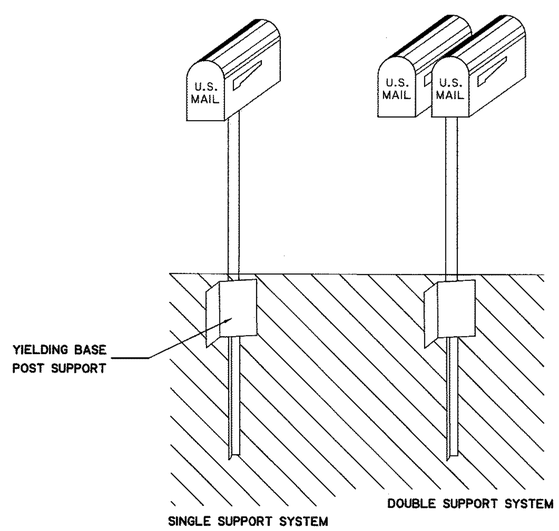

EXAMPLES OF SINGLE AND DOUBLE MAILBOX INSTALLATIONS ⊗ SERIES C

⊗ NOTE: SUPPORT FRAME AND FOUNDATION SHOWN ARE PROPRIETARY PRODUCTS.

NOTES:

NO MAILBOX WILL BE PERMITTED WHERE ACCESS IS OBTAINED FROM THE LANES OF A FREEWAY OR WHERE ACCESS IS OTHERWISE PROHIBITED BY LAW OR REGULATION.

MAILBOXES SHALL BE LOCATED ON THE RIGHT-HAND SIDE OF THE ROADWAY IN THE DIRECTION OF DELIVERY ROUTE EXCEPT ON ONE-WAY STREETS WHERE THEY MAY BE PLACED ON EITHER SIDE. THE BOTTOM OF THE BOX SHALL BE SET AT AN ELEVATION (H) ESTABLISHED BY THE U.S. POSTAL SERVICE, USUALLY BETWEEN 3'4" AND 4'0" ABOVE THE ROADWAY SURFACE. THE ROADSIDE FACE OF THE BOX SHALL BE OFFSET FROM THE EDGE OF THE TRAVELED WAY. SEE THE SUGGESTED GUIDELINES FOR LATERAL PLACEMENT OF MAILBOXES AT LEFT.

ALL MAILBOX INSTALLATIONS MUST CONFORM TO THE REQUIREMENTS OF THE U.S. POSTAL SERVICE.

WHERE FEASIBLE, NEW INSTALLATION SHOULD BE LOCATED ON THE FAR RIGHT SIDE OF AN INTERSECTION WITH A ROAD OR DRIVEWAY ENTRANCE. HOWEVER, CONSIDERATION SHOULD BE GIVEN TO

- MINIMIZING WALKING DISTANCE WITHIN THE ROADWAY FOR THE PATRON.
- AVAILABLE STOPPING SIGHT DISTANCE IN ADVANCE OF THE MAILBOX SITE, AND
- POSSIBLE RESTRICTIONS TO CORNER SIGHT DISTANCES AT INTERSECTIONS AND DRIVEWAY ENTRANCES.

FOR LOCATION OF MAILBOXES AT AN INTERSECTING ROADWAY, SEE DETAIL AT LEFT.

MAILBOXES SHALL BE OF LIGHT SHEET METAL OR PLASTIC CONSTRUCTION MANUFACTURED BY AN APPROVED MANUFACTURERS CONFORMING TO THE REQUIREMENTS OF THE U.S. POSTAL SERVICE. MAILBOXES MUST BE FULL-SCALE CRASH TESTED IN ACCORDANCE WITH THE LATEST EDITION OF MASH. NEWSPAPER DELIVERY BOXES SHALL BE OF LIGHT SHEET METAL OR PLASTIC CONSTRUCTION OF MINIMUM DIMENSIONS SUITABLE FOR HOLDING A NEWSPAPER.

MANUFACTURERS WHOSE MAILBOXES HAVE BEEN APPROVED BY THE POSTMASTER GENERAL WILL BE LISTED IN THE POSTAL OPERATION MANUAL (POM) AND PUBLISHED IN THE POSTAL BULLETIN. NO MORE THAN TWO MAILBOXES MAY BE MOUNTED ON A SUPPORT STRUCTURE UNLESS THE SUPPORT STRUCTURE AND MAILBOX ARRANGEMENT HAVE BEEN SHOWN TO BE SAFE BY CRASH TESTING IN ACCORDANCE WITH THE LATEST EDITION OF MASH. HOWEVER, LIGHTWEIGHT NEWSPAPER BOXES MAY BE MOUNTED BELOW THE MAILBOX ON THE SIDE OF THE MAILBOX SUPPORT.

MAILBOX SUPPORTS SHALL NOT BE SET IN CONCRETE UNLESS THE SUPPORT DESIGN HAS BEEN SHOWN TO BE SAFE BY CRASH TESTING IN ACCORDANCE WITH THE LATEST EDITION OF MASH WHEN SO INSTALLED.

POSTS SHALL BE STRONG ENOUGH TO SUPPORT THE BOX, BUT CAPABLE OF BENDING WHEN STRUCK BY AN AUTOMOBILE OR A LIGHT TRUCK. MAXIMUM STRENGTH POSTS ARE EITHER A METAL POST WITH A STRENGTH NO GREATER THAN A 2" DIAMETER STANDARD STRENGTH STEEL PIPE OR A 2#/FT FLANGED CHANNEL OR A 4"X4" WOODEN POST. POSTS ARE ACCEPTABLE MAILBOX SUPPORTS WHEN EMBEDDED NO MORE THAN 24" INTO THE GROUND. A METAL POST SHALL NOT BE FITTED WITH AN ANCHOR PLATE, BUT MAY HAVE AN ANTI-TWIST DEVICE THAT EXTENDS NO MORE THAN 10" BELOW THE GROUND SURFACE.

THE POST-TO-BOX ATTACHMENT SHALL BE OF SUFFICIENT STRENGTH TO PREVENT THE BOX FROM SEPARATING FROM THE POST TOP IF THE INSTALLATION IS STRUCK BY AN AUTOMOBILE OR LIGHT TRUCK.

THE MINIMUM SPACING BETWEEN THE CENTERS OF SUPPORT POSTS SHALL BE THREE-FOURTHS THE HEIGHT OF THE POSTS ABOVE THE GROUND LINE

MAILBOX SUPPORT DESIGNS NOT DETAILED WILL BE ACCEPTABLE IF FULL-SCALE CRASH TESTED IN ACCORDANCE WITH THE LATEST EDITION OF MASH AND IF APPROVED BY THE ENGINEER.

FOR POST-TO-BOX ATTACHMENT DETAILS, SEE SHEET 2 OF 2.

MASH - MANUAL FOR ASSESSING SAFETY HARDWARE.

SHEET NUMBER 207

PARISH | CONTROL SECTION | STATE PROJECT

DESIGN H. VU | CHECK D. SMITH | DETAIL H. VU | CHECK D. SMITH | REVIEW | SERIES # 1 OF 2

STATE OF LOUISIANA
HAI D. VU
REG. No. 34755
REGISTERED PROFESSIONAL ENGINEER IN CIVIL ENGINEERING
04/04/22

APPROVED BY CHIEF ENGINEER:
DATE: 4/4/2022

MAILBOX INSTALLATION DETAILS

MB-01

DOTD
LOUISIANA DEPARTMENT OF TRANSPORTATION & DEVELOPMENT

ROAD DESIGN

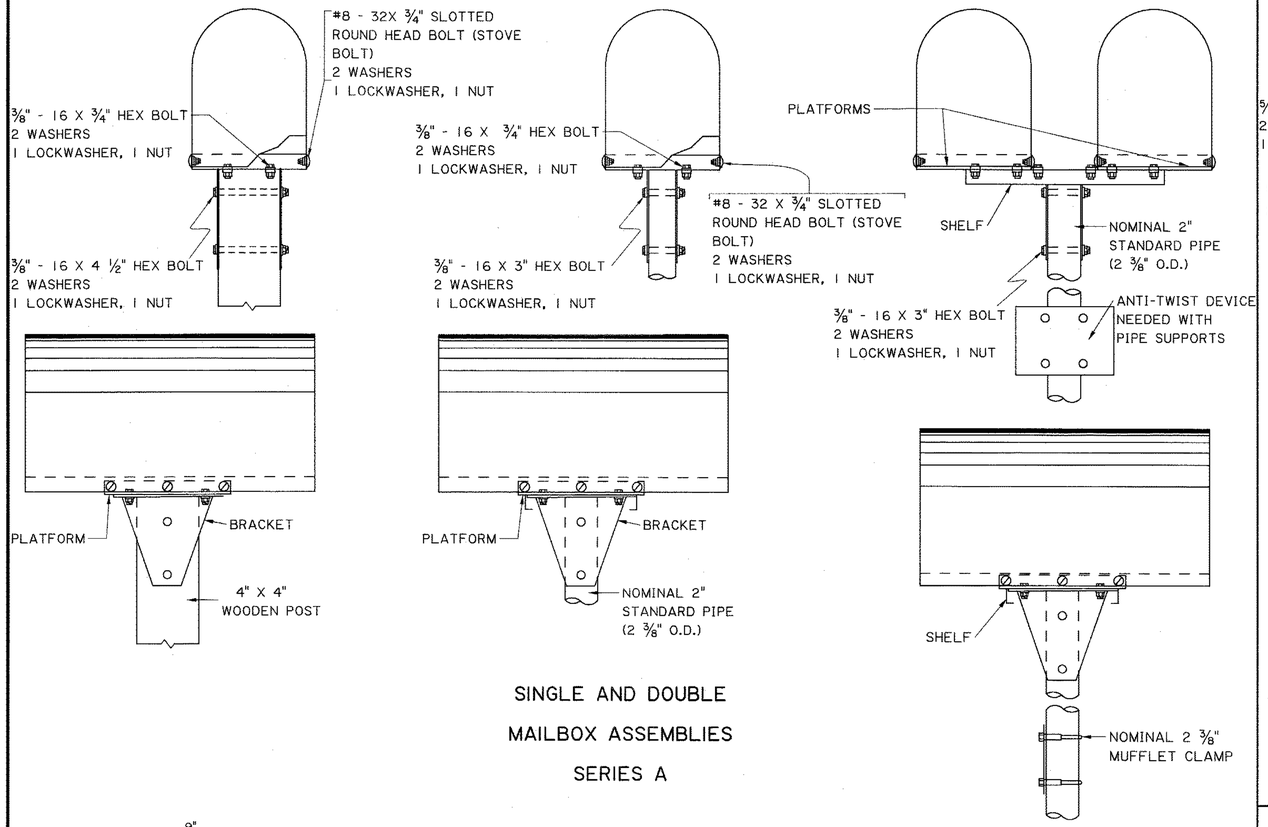

SINGLE AND DOUBLE MAILBOX ASSEMBLIES

SERIES A

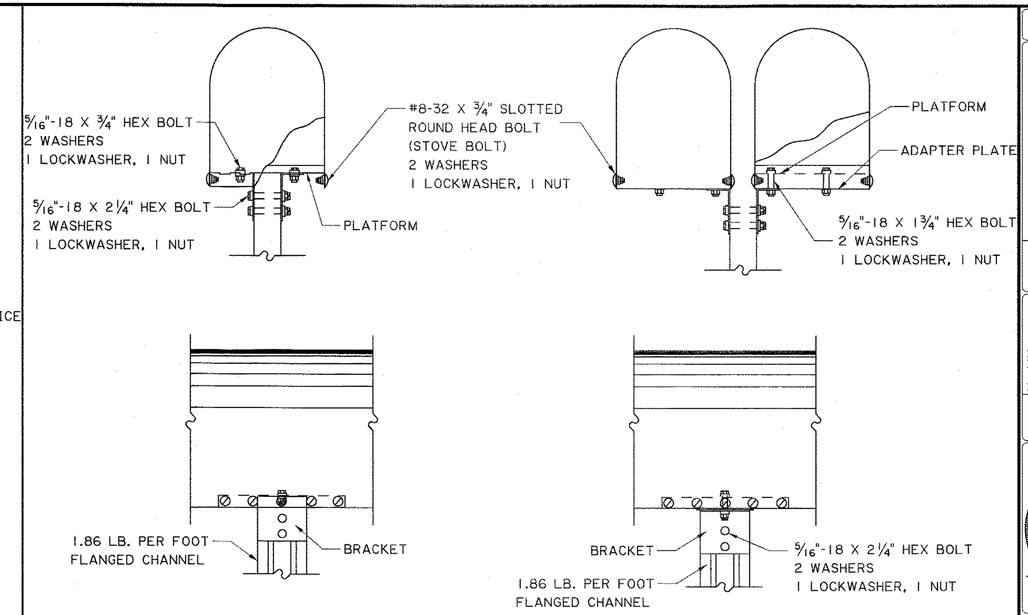

SINGLE AND DOUBLE MAILBOX ASSEMBLIES

SERIES B

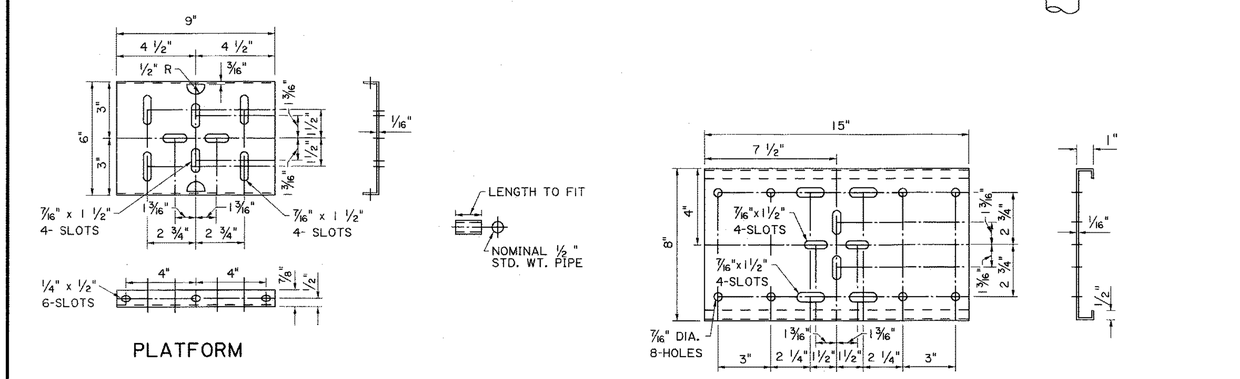

MAILBOX SUPPORT HARDWARE SERIES A

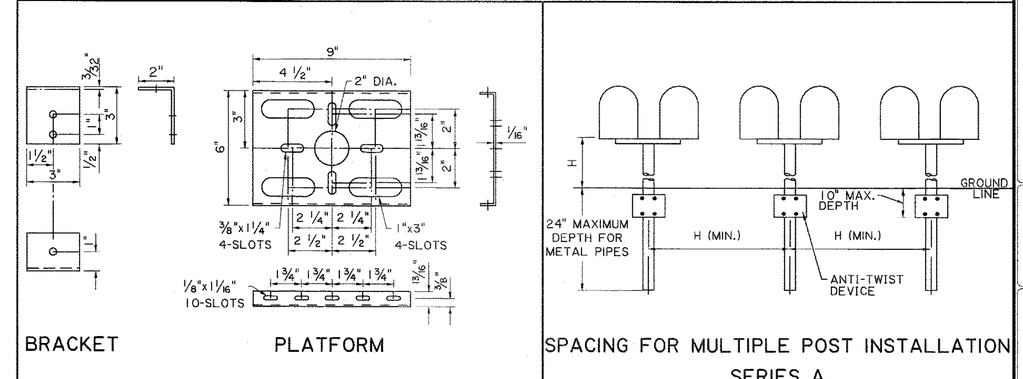

SPACING FOR MULTIPLE POST INSTALLATION

SERIES A

MAILBOX SUPPORT HARDWARE

SERIES B

SPACING FOR MULTIPLE POST INSTALLATION

SERIES B

SHEET NUMBER	208
PARISH	
CONTROL SECTION	
STATE PROJECT	
DESIGN H. VU	
CHECK D. SMITH	
DETAIL H. VU	
CHECK D. SMITH	
REVIEW	
SERIES # 2 OF 2	

STATE OF LOUISIANA
HAI D. VU
REG. No. 34755
REGISTERED PROFESSIONAL ENGINEER IN CIVIL ENGINEERING
04/04/22

APPROVED BY CHIEF ENGINEER:
DATE: 4/4/2022

MAILBOX INSTALLATION DETAILS

MB-01

DOTD
LOUISIANA DEPARTMENT OF TRANSPORTATION & DEVELOPMENT

ROAD DESIGN

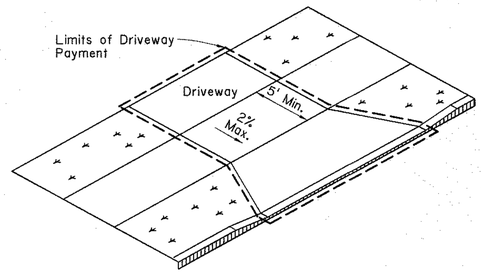

SETBACK SIDEWALK

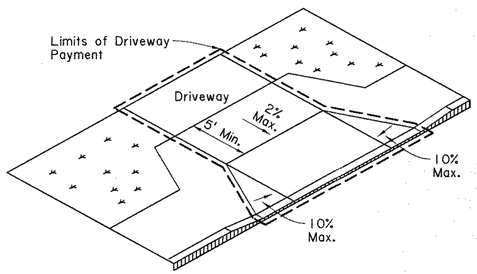

APRON OFFSET SIDEWALK

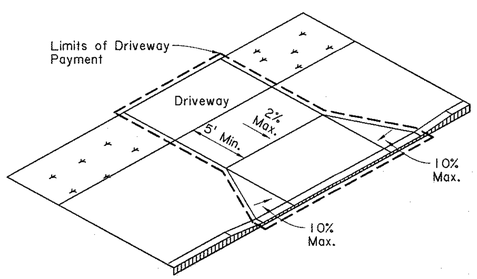

WIDE SIDEWALK

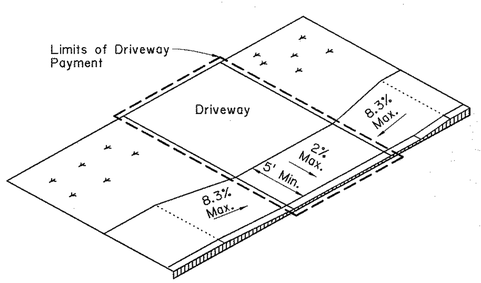

RAMP SIDEWALK

SIDEWALK TREATMENT AT DRIVEWAYS

Refer to Driveway Standard Plans for further details.

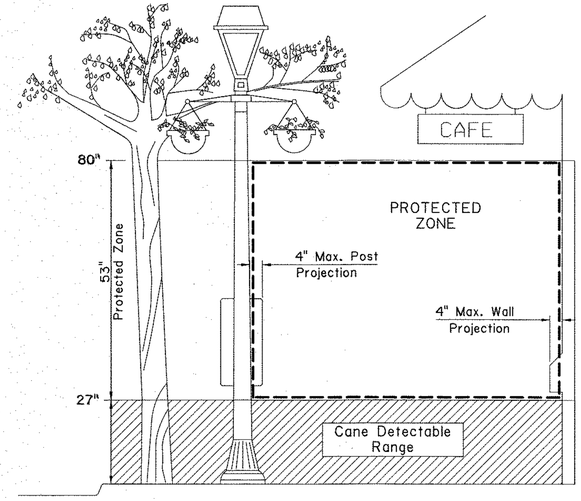

PROTECTED ZONE

Notes:

1. In pedestrian circulation area, maximum 4" projection for post or wall mounted objects between 27" and 80" above the surface.
2. When an obstruction of a height greater than 27" from the surface would create a protrusion of more than 4" into the pedestrian circulation area, construct additional curb or foundation at the bottom to provide a maximum 4" overhang.
3. Protruding objects of a height less than 27" are detectable by cane and do not require additional treatment.

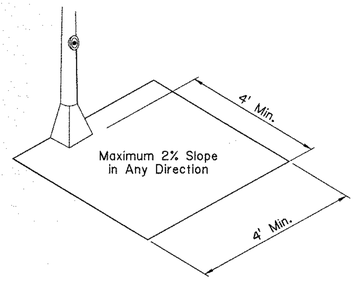

CLEAR GROUND SPACE ADJACENT TO PEDESTRIAN PUSH BUTTON

Minimum 4' x 4' clear space required at public use fixtures.

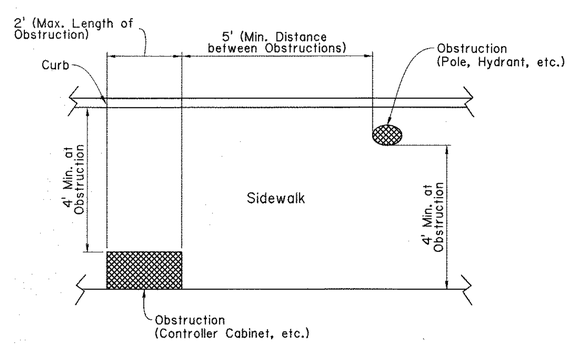

PLAN VIEW
PLACEMENT OF OBSTRUCTIONS

Items not intended for public use.

PEDESTRIAN FACILITIES GENERAL NOTES

Curb Ramps

1. Maximum allowable cross slope of curb ramp surfaces is 2%; desired cross slope is 1.5%.
2. Theoretical pay areas for curb ramps are as shown on sheet 2, unless otherwise noted in the plans. These areas may be field adjusted as approved by the Project Engineer.
3. Grade breaks at the top and bottom of curb ramps runs shall be perpendicular to the direction of the ramp run.
4. Where curb ramps are located adjacent to a walking surface, a flare must be provided; otherwise a curb may be provided. For an example, refer to curb ramp Type 2 on sheet 2.
5. The landing dimensions are 5'x5' with a maximum 2% slope in any direction. The landing clear width shall be at least as wide as the widest ramp run leading to the landing.
6. Small raised channelization islands, which cannot provide a minimum of 5'x5' landing at the top of ramps, shall be cut through level with the surface of the street.
7. Raised medians should be 6' wide in the direction of pedestrian travel to serve as a pedestrian refuge area. Medians with pedestrian access routes through them shall be designed in accordance with Draft PROWAG.
8. Maneuvering space at the bottom of curb ramps shall be a minimum of 4'x4' completely contained within the crosswalk and completely outside the parallel vehicle travel lane.
9. It is desirable to provide a no-parking zone 50' from crosswalks on each intersection approach or provide a curb extension.
10. Drainage structures should be located on the upstream side of the ramp and located to prevent ponding near the curb ramp. Drainage structures should be placed outside the crosswalk.
11. Slopes of adjoining gutters and roadway surfaces immediately adjacent to the curb ramp shall not exceed 5%. Refer to the Transition from the Curb Ramp to Roadway Detail on sheet 1.
12. Curb ramps should be aligned with the direction of pedestrian travel on the crosswalk or theoretical crosswalk. Refer to sheet 3 for typical crossing layouts and refer to the pavement marking standards for crosswalk markings.
13. Crosswalk markings shall be placed a distance of 24" from the flare on each side of a diagonal curb ramp. Refer to sheet 3 for an example.
14. Curb ramps shall include detectable warning surfaces. Refer to sheet 4 for details of detectable warning surfaces.
15. Where a curb ramp is constructed within existing curb, curb and gutter and/or sidewalk, the existing curb or curb and gutter shall be removed to the nearest joint beyond the curb transition or the extent that no remaining section of curb or curb and gutter is less than 5' long or as directed by the Project Engineer. Existing sidewalks shall be removed to the nearest joint beyond the flare slope or to the extent that no remaining section of sidewalk is less than 5' long or as directed by the Project Engineer.

Sidewalks

1. Where a 5' sidewalk cannot be provided due to site constraints, 5'x5' passing areas at intervals not to exceed 200' are required.
2. Where sidewalks and crosswalks are contained within street or highway right-of-way, the grade of the sidewalk or crosswalk shall not exceed the grade of the adjacent street or highway. Where sidewalks are not contained within a street or highway right-of-way, the grade of the sidewalk shall be 5% maximum.
3. Maximum allowable cross slope of sidewalk surfaces is 2%; desired cross slope is 1.5%.
4. Vertical surface discontinuities along a sidewalk shall be 1/2" maximum. Discontinuities between 1/4" and 1/2" shall be beveled at a 1:2 maximum slope.
5. Where sidewalks intersect with streets, detectable warning surfaces are required. Refer to sheet 4 for details of detectable warning surfaces.
6. Traffic signal or illumination poles, ground boxes, controller boxes, signs, drainage facilities and other items shall be placed so as not to obstruct the accessible route.
7. When a sidewalk crosses a driveway and exceeds the 2% maximum cross slope, the driveway or driveway portion shall be reconstructed to meet the 2% maximum cross slope requirement. Refer to driveway standard plans for driveway details.
8. Handrails are not required on sidewalks within highway right-of-way, unless site specific conditions, such as a vertical drop-off, dictate. Where handrails are provided, they must comply with ADAAG 505.
9. To prevent tracking of gravel onto the sidewalk, gravel driveways should be paved from the roadway edge to a point 10' behind the sidewalk or the right-of-way, whichever is less.

ADA - Americans with Disabilities Act
ADAAG - Americans with Disabilities Act Accessibility Guidelines
Draft PROWAG - Draft Public Rights-of-Way Accessibility Guidelines

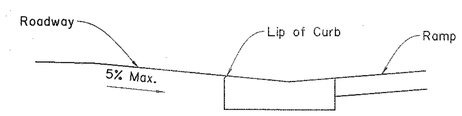

TRANSITION FROM CURB RAMP TO ROADWAY

SHEET NUMBER 209

PARISH | CONTROL SECTION | STATE PROJECT

DESIGN MAL | CHECK BPW | DETAIL MAL | CHECK BPW | REVIEW | SERIES # 1 OF 5

STATE OF LOUISIANA
MELISSA LEBAS
License No. 39111
PROFESSIONAL ENGINEER
IN
CIVIL ENGINEERING
Melissa LeBas
7/14/2022

APPROVED BY CHIEF ENGINEER:
DATE: 7/21/2022

STATE OF LOUISIANA
JOHN BEL EDWARDS
GOVERNOR

PEDESTRIAN FACILITIES
GENERAL NOTES AND MISC. DETAILS

PED-01

DOTD
LOUISIANA DEPARTMENT OF TRANSPORTATION & DEVELOPMENT

STANDARD PLAN

7/14/2022 12:04

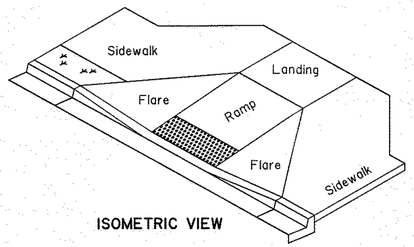

ISOMETRIC VIEW

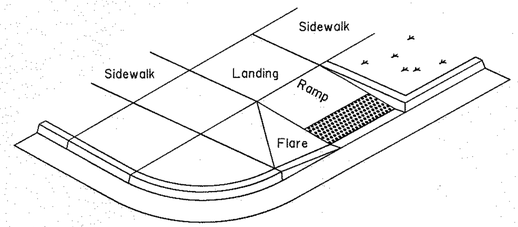

ISOMETRIC VIEW

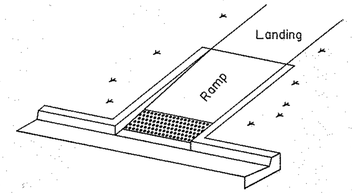

ISOMETRIC VIEW

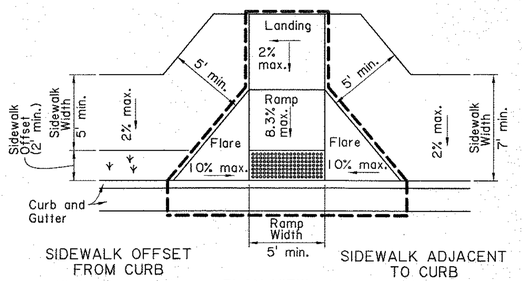

PLAN VIEW

TYPE 1

THEORETICAL PAY AREA = 12.8 SQ. YDS.

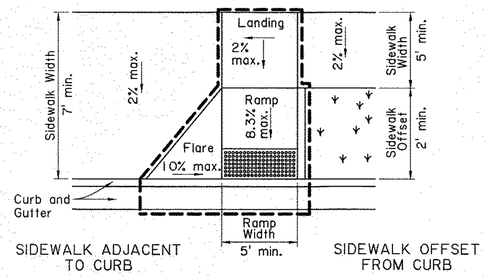

PLAN VIEW

TYPE 2

THEORETICAL PAY AREA = 10.4 SQ. YDS.

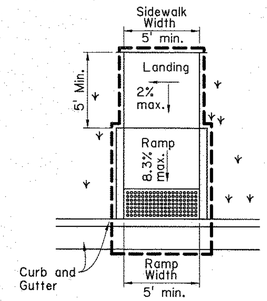

PLAN VIEW

TYPE 3

THEORETICAL PAY AREA = 8.1 SQ. YDS.

PERPENDICULAR CURB RAMPS

If a level landing of at least 3' cannot be provided, a perpendicular curb ramp should not be used.

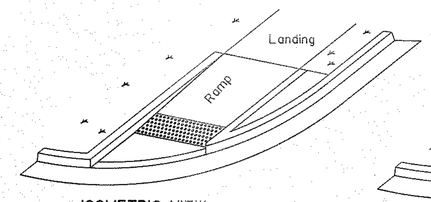

ISOMETRIC VIEW

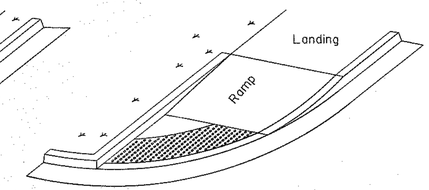

ISOMETRIC VIEW

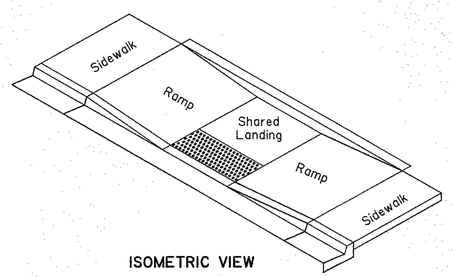

ISOMETRIC VIEW

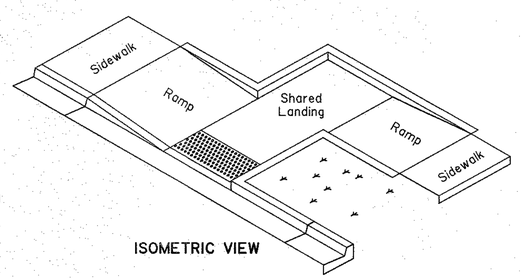

ISOMETRIC VIEW

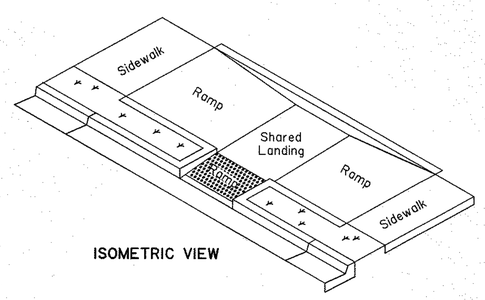

ISOMETRIC VIEW

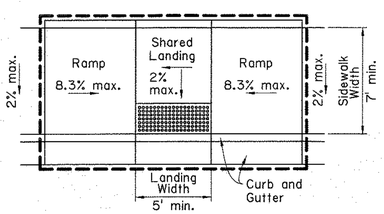

PLAN VIEW

TYPE 4

THEORETICAL PAY AREA = 17.9 SQ. YDS.

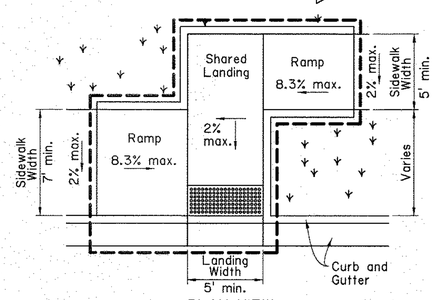

PLAN VIEW

TYPE 5

THEORETICAL PAY AREA = 19.1 SQ. YDS.

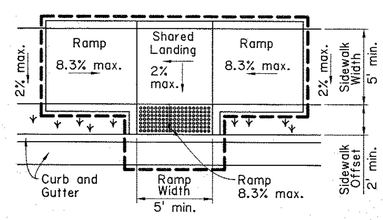

PLAN VIEW

TYPE 6

THEORETICAL PAY AREA = 13.7 SQ. YDS.

PARALLEL CURB RAMPS

COMBINATION CURB RAMP

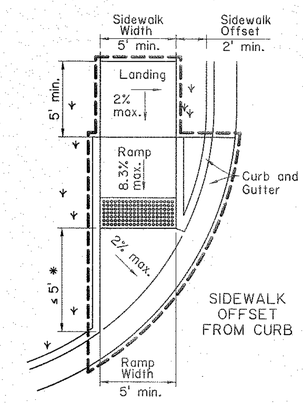

PLAN VIEW

TYPE 7

THEORETICAL PAY AREA = 13.3 SQ. YDS.

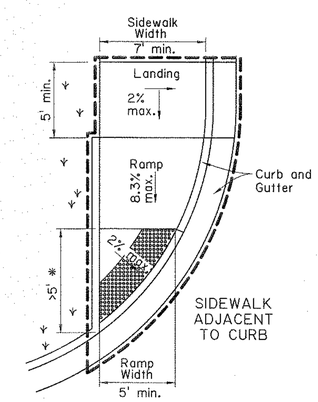

PLAN VIEW

TYPE 8

THEORETICAL PAY AREA = 15.5 SQ. YDS.

DIRECTIONAL CURB RAMPS

* Where the grade break is less than or equal to 5' from the back of curb, place detectable warning surface as shown in Type 7. Where grade break is greater than 5' from the back of the curb, place detectable warning surface as shown in Type 8.

LEGEND OF PATTERNS

- Denotes Non-Walking Surface Not Part of Pedestrian Path
- Detectable Warning Surface
- Limits of Payment
- Slope

All slopes shown are maximum allowable. The least possible slope that will drain properly should be used.

Curb ramps shall be placed and designed where ponding does not occur at the bottom or on the curb ramp.

SHEET NUMBER 210

PARISH | CONTROL SECTION | STATE PROJECT

DESIGN MAL | CHECK BPW | DETAIL MAL | CHECK BPW | REVIEW | SERIES * 2 OF 5

STATE OF LOUISIANA
MELISSA LEBAS
License No. 39111
PROFESSIONAL ENGINEER
IN
CIVIL ENGINEERING
Melissa LeBas
7/14/2022

APPROVED BY CHIEF ENGINEER: 7/21/2022 DATE:

STATE OF LOUISIANA

PEDESTRIAN FACILITIES

CURB RAMPS AND DETECTABLE WARNING LOCATION

PED-01

DOTD
LOUISIANA DEPARTMENT OF TRANSPORTATION & DEVELOPMENT

STANDARD PLAN

7/14/2022 12:04

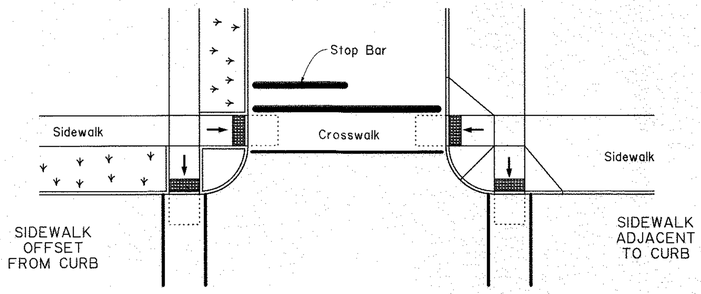

DETAIL A: CURB RAMPS PLACED OUTSIDE THE RADIUS OF A CURVE

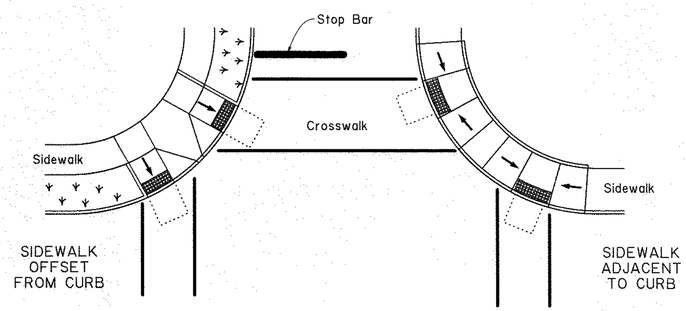

DETAIL B: PAIRED CURB RAMPS PLACED WITHIN THE RADIUS OF A CURVE

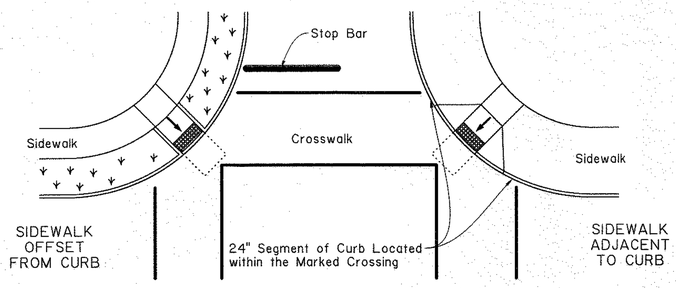

DETAIL C: SINGLE CURB RAMP PLACED ON APEX OF A CURVE (DIAGONAL CURB RAMPS)

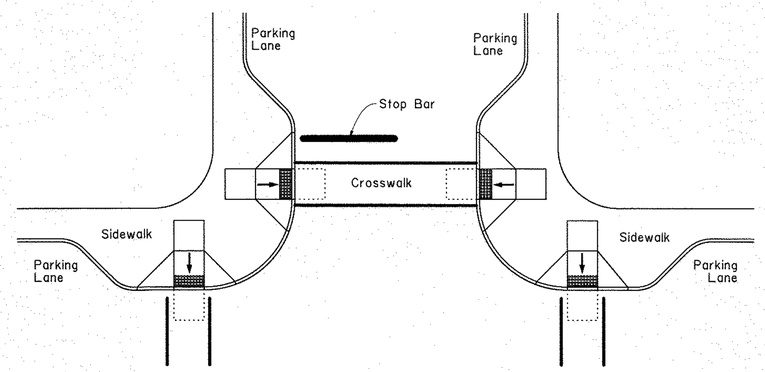

DETAIL D: CURB RAMPS PLACED ON CURB EXTENSION (BULB-OUTS)

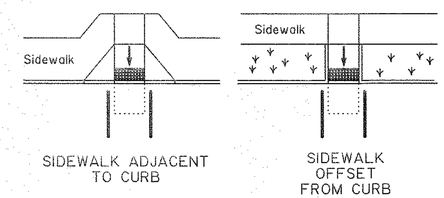

DETAIL E: CURB RAMPS PLACED AT MID-BLOCK CROSSING

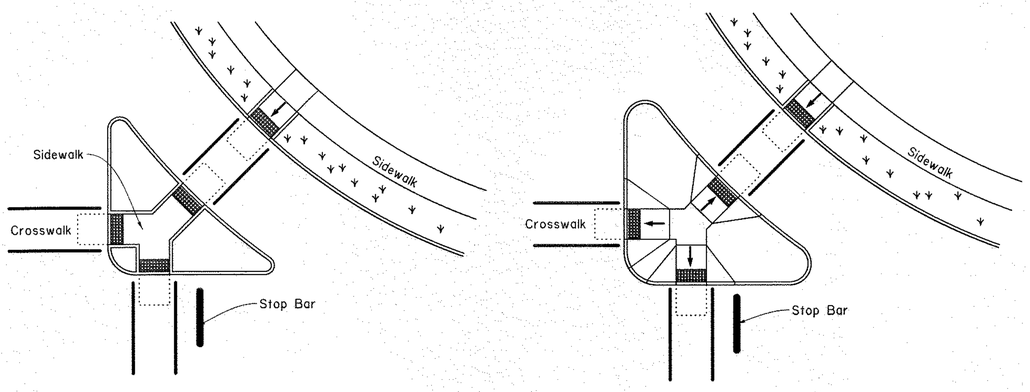

CUT-THROUGH ISLAND

RAISED ISLAND

DETAIL F: SIDEWALKS AND CURB RAMPS AT ISLANDS

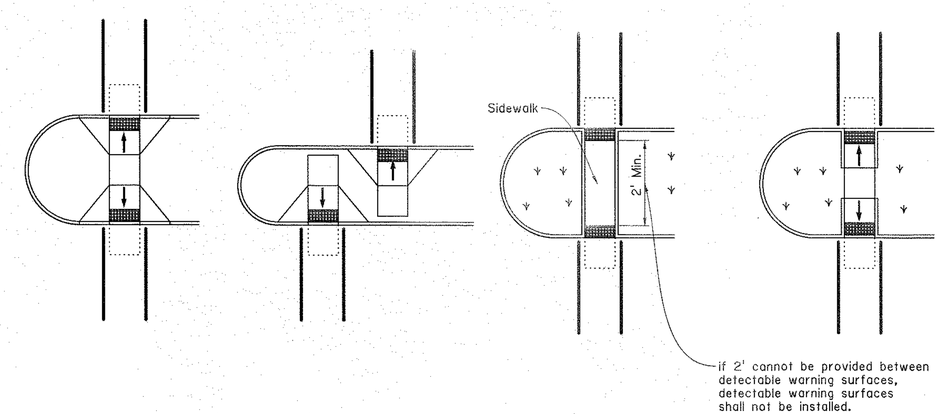

DETAIL G: SIDEWALKS AND CURB RAMPS AT MEDIANS

GENERAL NOTES:

1. Curb ramps placed outside the radius of the curve are preferred. Paired curb ramps placed within the radius of a curve are acceptable. Single curb ramps placed on the apex of a curb should not be used unless site constraints, such as the location of drainage structures, require it.
2. Details and dimensions of curb ramps, sidewalks, and detectable warning surfaces are shown elsewhere.
3. Striping (crosswalks and stop bars) are shown for reference only. Refer to the pavement marking standard plans for striping details.

LEGEND

- Denotes non-walking surface not part of pedestrian path
- Detectable Warning Surface
- Maneuvering Space (4'x4' Min.)
- Ramp Surface

SHEET NUMBER 211

PARISH | CONTROL SECTION | STATE PROJECT

DESIGN MAL | CHECK BPW | DETAIL MAL | CHECK BPW | REVIEW | SERIES # 3 OF 5

STATE OF LOUISIANA
MELISSA LEBAS
License No. 39111
PROFESSIONAL ENGINEER
IN
CIVIL ENGINEERING
Melissa LeBas
7/14/2022

APPROVED BY CHIEF ENGINEER:
DATE: 7/21/2022

STATE OF LOUISIANA DEPARTMENT OF TRANSPORTATION AND DEVELOPMENT

PEDESTRIAN FACILITIES
TYPICAL CROSSING LAYOUTS

PED-01

DOTD
LOUISIANA DEPARTMENT OF TRANSPORTATION & DEVELOPMENT

STANDARD PLAN

7/14/2022 12:04

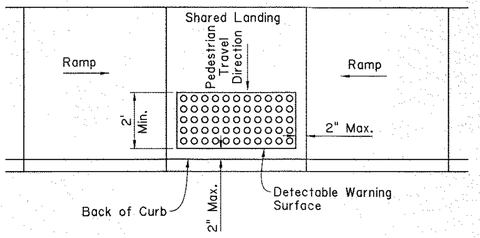

PARALLEL CURB RAMP

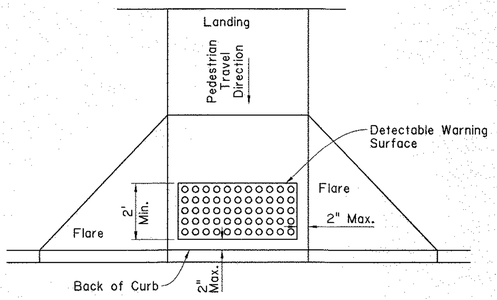

PERPENDICULAR CURB RAMP

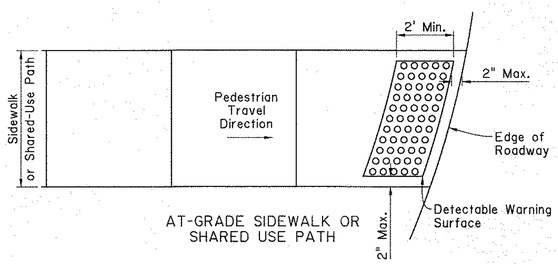

AT-GRADE SIDEWALK OR SHARED USE PATH

TYPICAL PLACEMENT OF DETECTABLE WARNING SURFACE

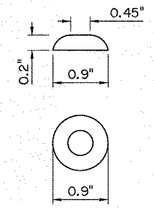

TRUNCATED DOME

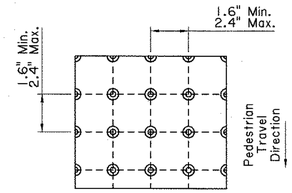

TRUNCATED DOME SPACING

Notes:

Domes shall be arranged in a square in-line pattern or radial pattern

Color Fastness: Paver's composite coloring and ultra-violet stabilization must be homogeneous through the producted.

TRUNCATED DOME DETAILS

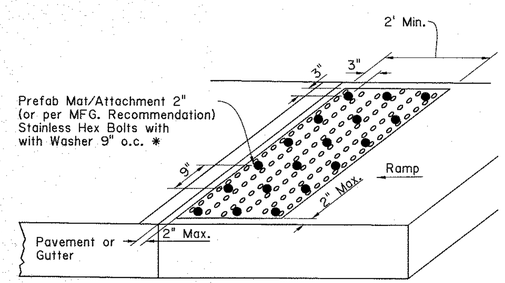

*Note: Retrofit application placed on top of existing ramp with drilled and epoxied bolts. Epoxy full surface area per manufacturer's recommendation.

PREFABRICATED MAT OPTION (INLAID)

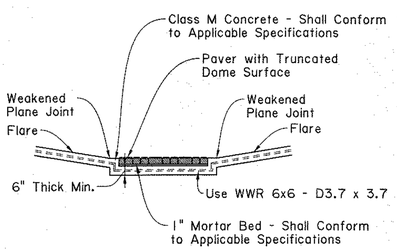

SECTION A-A

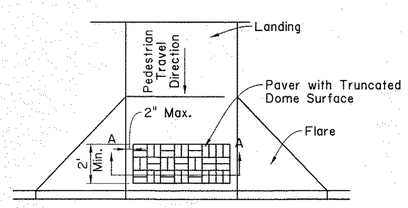

TRUNCATED DOME PATTERN CURB RAMP

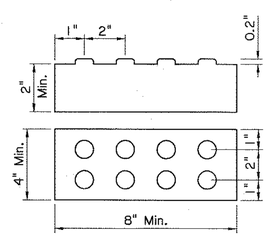

PAVER WITH TRUNCATED DOME SURFACE

Notes: Paver units shall meet all requirements of the applicable ASTM Standards. Layout pattern shall be appropriate for size of paver used. 4"x8" pavers shall be laid out in a 2x2 basket weave pattern. 12"x12" pavers shall be laid out in a block pattern.

Paver units shall be saw cut only and any cut unit shall not be less than 25% of a full unit.

Installation should meet compliance with Draft PROWAG R302.7.2 (Vertical Surface Discontinuities). Vertical surface discontinuities shall be 1/2" maximum. Discontinuities between 1/4" and 1/2" shall be beveled at a 1:2 maximum slope.

DETECTABLE WARNING SURFACE PAVER OPTION

GENERAL NOTES:

1. For ADA compliance, detectable warning surfaces must be provided on all pedestrian curb ramps, medians and pedestrian refuge islands (width 6' or greater), railroad crossings and at-grade sidewalk and shared-use paths intersecting with roadways.
2. Curb ramps must contain a detectable warning surface that consists of raised truncated domes complying with ADA guidelines. The surface must contast visually with adjoining surfaces, including side flares, in accordance with Section 706 of the Standard Specifications. Color for detectable warning surface shall contrast visually with adjoining surfaces, either light-on-dark or dark-on-light.
3. Detectable warning surfaces must be slip resistant and not allow water to accumulate.
4. Truncated domes should be aligned perpendicular or radial to the grade break between the curb ramp or at-grade sidewalk and the street.
5. Detectable warning surfaces shall be a minimum of 24" in depth in direction of pedestrian travel and extend the full width of the ramp run or landing where the pedestrian access route enters the street. Some detectable warning products may require a concrete border. The concrete border should not exceed 2".
6. Detectable warning surfaces shall be placed at the back of curb or no greater than 5' from the back of curb. Detectable warning surfaces may be curved along the corner radius. Refer to sheet 2 for typical placement of detectable warning surfaces on curb ramp types.
7. Detectable warning surfaces may be stamped, constructed of brick pavers or inlaid prefabricated mats attached by epoxy adhesive and mechanical attachment. Other detectable warning installations may be installed with approval from the Project Engineer, provided that the detectable warning surface meets ADA guidelines. No painted surfaces will be allowed.
8. Any retrofit application of detectable warning surfaces must have beveled edges. The beveled edge shall not exceed a slope greater than 1:2.

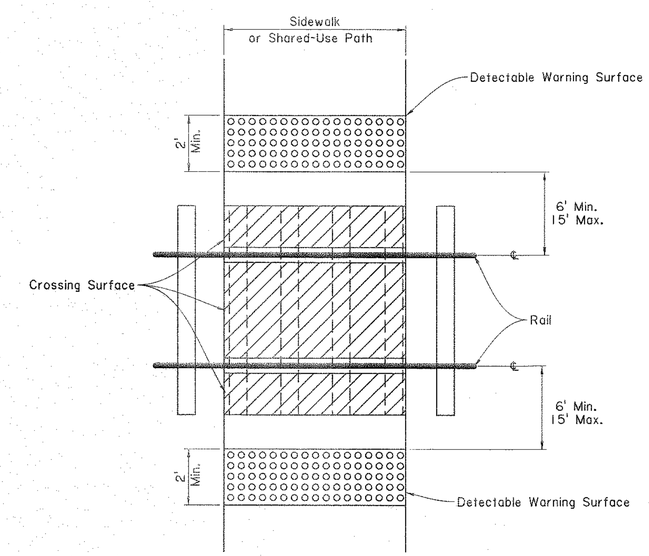

PLAN VIEW

LOCATION OF DETECTABLE WARNING SURFACES AT RAILROAD CROSSINGS

Note: Rows of truncated domes should be aligned parallel with the direction of wheelchair travel.

SHEET NUMBER	212

PARISH	CONTROL SECTION	STATE PROJECT

DESIGN	MAL	DETAIL	MAL
CHECK	BPW	CHECK	BPW
REVIEW		SERIES #	4 OF 5

STATE OF LOUISIANA
MELISSA LEBAS
License No. 39111
PROFESSIONAL ENGINEER
IN
CIVIL ENGINEERING
Melissa LeBas
7/14/2022

APPROVED BY CHIEF ENGINEER:
DATE: 7/21/2022

PEDESTRIAN FACILITIES
DETECTABLE WARNING SURFACES

PED-01

DOTD
LOUISIANA DEPARTMENT OF TRANSPORTATION & DEVELOPMENT

STANDARD PLAN

7/14/2022 12:04

GENERAL NOTES:

1. Weakened plane joints are required at all sidewalk ramps or driveways slope break lines.
2. Separate curb ramps and landing from adjacent sidewalk with preformed joint filler of 1/2".

JOINT LEGEND

- (A) 1/2" Expansion Joints (Preformed Joint Filler)
- (B) 1/8" Weakened Plane Joint
- (C) Construction Joint
- (D) Cold Joint with Bond Breaker

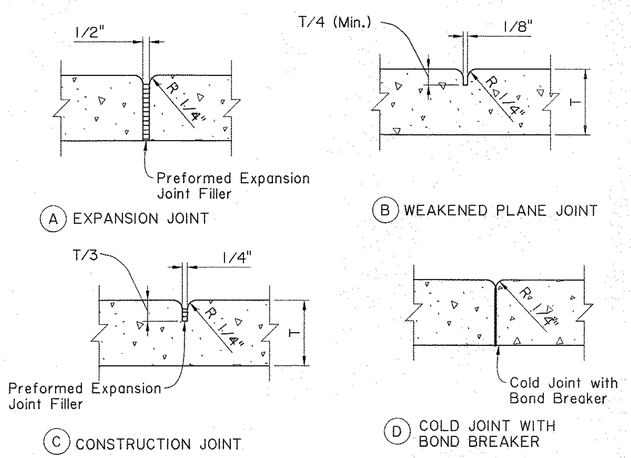

JOINT DETAILS

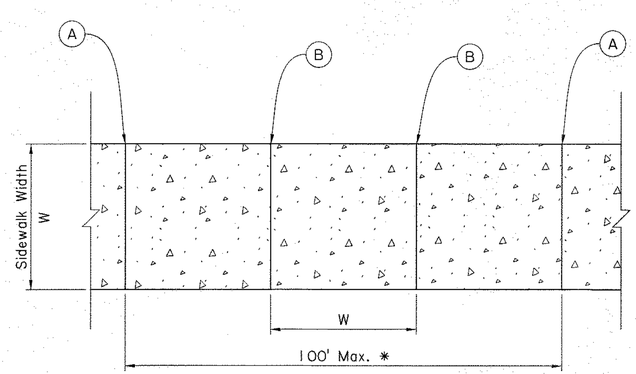

PLAN VIEW
SIDEWALK JOINT LAYOUT

* Joint spacing to be approved by Project Engineer

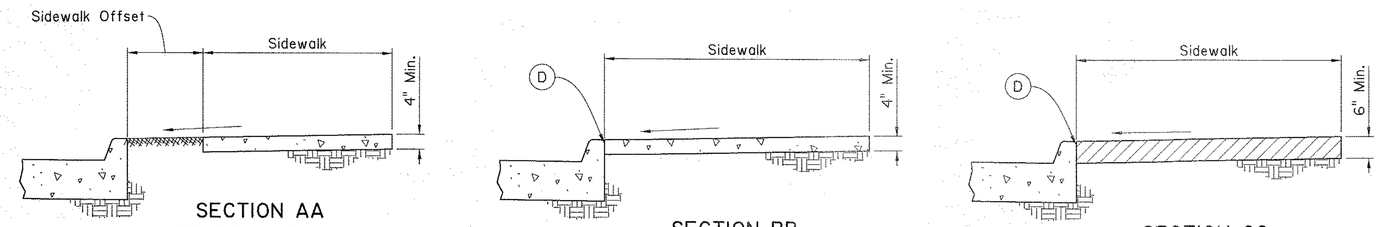

SECTION AA
OFFSET SIDEWALK

SECTION BB
SIDEWALK ADJACENT TO CURB

SECTION CC
SIDEWALK ADJACENT TO CURB
(WITHIN RADIUS OF TURNOUT)

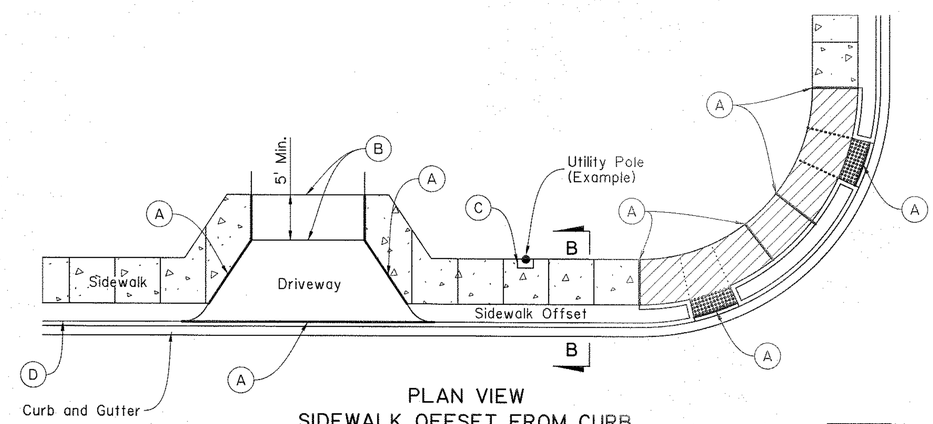

PLAN VIEW
SIDEWALK OFFSET FROM CURB

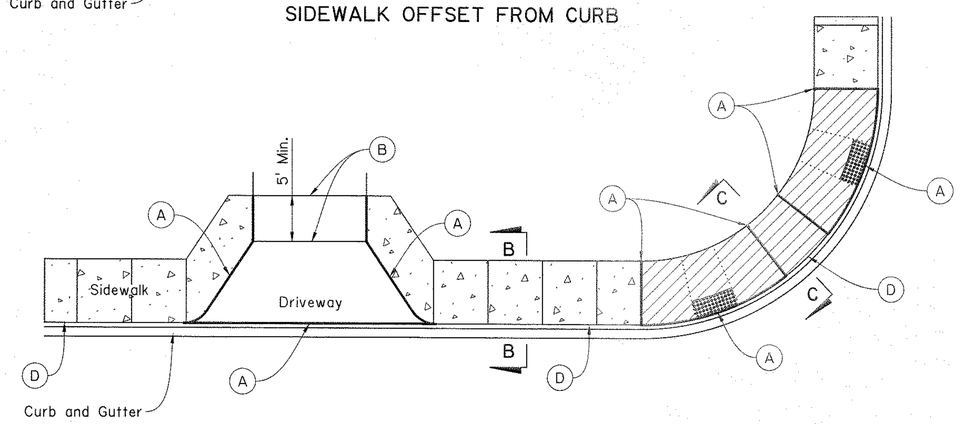

PLAN VIEW
SIDEWALK ADJACENT TO CURB

4" Thick Concrete

6" Thick Concrete

Note: Driveways and curb ramps are shown for reference only. Refer to the driveway standard plans and curb ramp sheet for details.

SHEET NUMBER 213

PARISH | CONTROL SECTION | STATE PROJECT

DESIGN MAL | CHECK BPW | DETAIL MAL | CHECK BPW | REVIEW | SERIES # 5 OF 5

STATE OF LOUISIANA
MELISSA LEBAS
License No. 39111
PROFESSIONAL ENGINEER
IN
CIVIL ENGINEERING
Melissa Lebas
7/14/2022

APPROVED BY CHIEF ENGINEER: DATE: 7/21/2022

PEDESTRIAN FACILITIES
JOINT DETAILS

PED-01

DOTD
LOUISIANA DEPARTMENT OF TRANSPORTATION & DEVELOPMENT

STANDARD PLAN

$$---- SUBMITTAL STAGE ------$$
$$this is the pathname including directory path and design file name$$
$DATE$ $TIME$

Ⓐ CENTERLINE OF TWO-LANE ROADWAY WITH TWO-WAY TRAFFIC

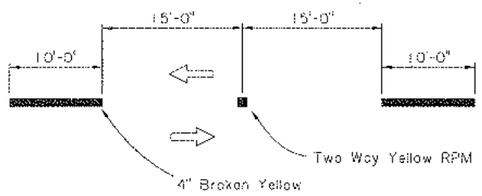

Ⓑ LANE LINE BETWEEN LANES OF TRAFFIC TRAVELING IN THE SAME DIRECTION

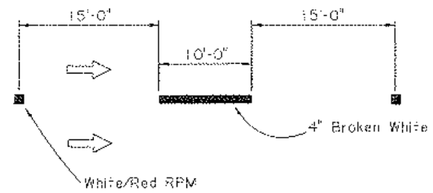

Ⓒ CENTERLINE OF MULTI-LANE UNDIVIDED ROADWAY

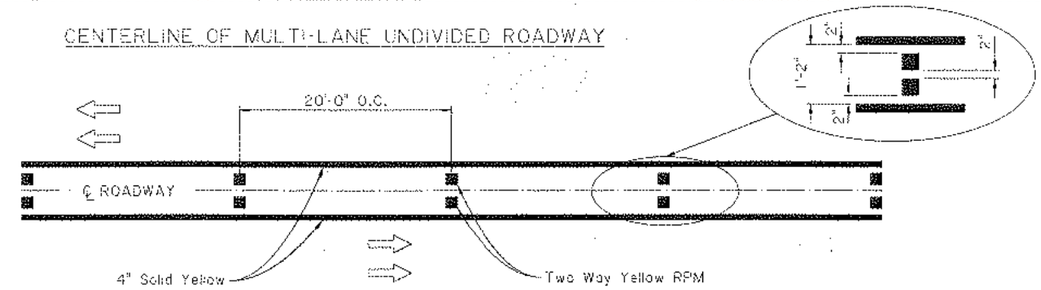

Ⓓ CONTRAST LANE LINE BETWEEN LANES ON PORTLAND CEMENT CONCRETE ADT ≥ 80,000

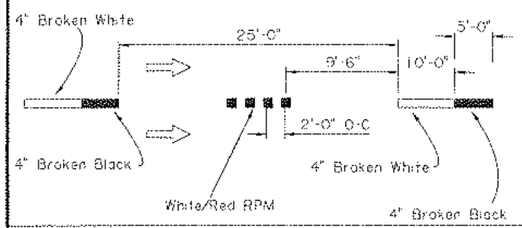

Ⓔ CONTRAST LANE LINE BETWEEN LANES ON PORTLAND CEMENT CONCRETE ADT < 80,000

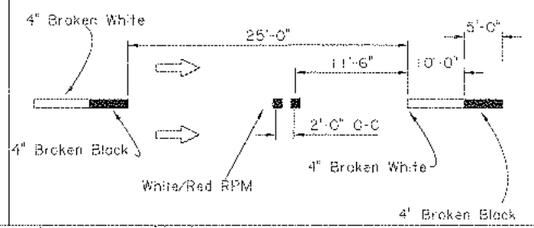

Ⓕ LANE LINE BETWEEN LANES ON ASPHALT CONCRETE WITH ADT ≥ 80,000

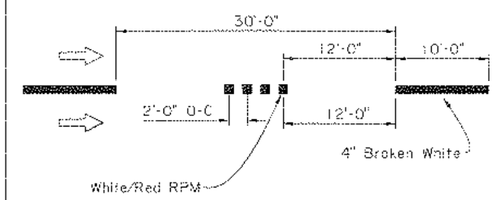

Ⓖ LANE LINE BETWEEN LANES ON ASPHALT CONCRETE WITH ADT < 80,000

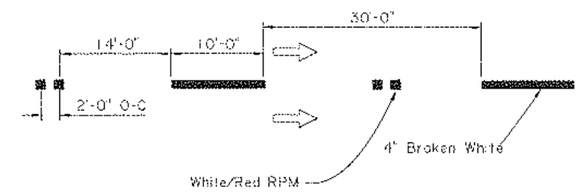

Ⓗ CONTRAST LANE LINE BETWEEN LANES ON PORTLAND CONCRETE ADT ≥ 80,000

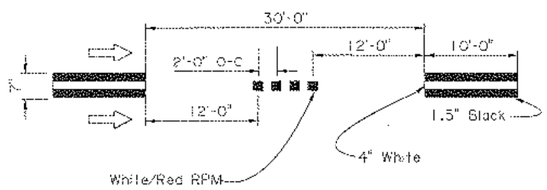

Ⓙ CONTRAST LANE LINE BETWEEN LANES ON PORTLAND CONCRETE ADT < 80,000

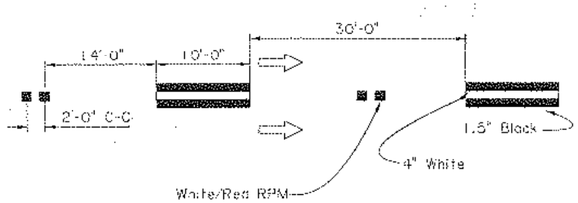

Ⓘ CENTERLINE OF TWO-LANE ROADWAY WITH TWO-WAY TRAFFIC WITH PASSING RESTRICTIONS

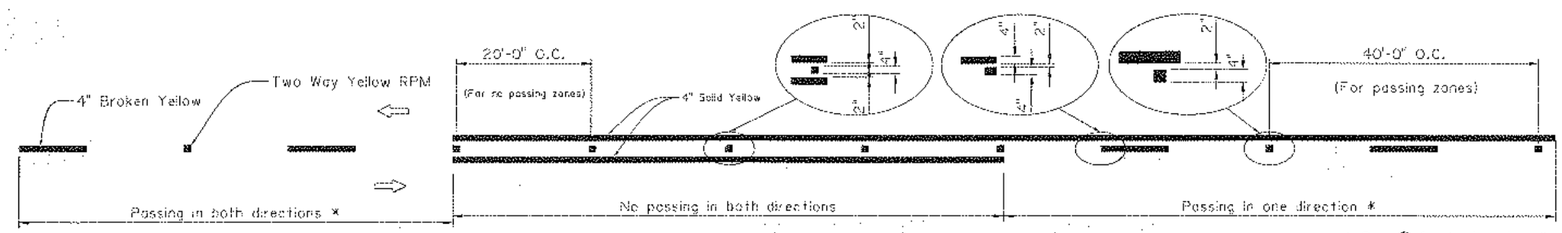

* See Ⓐ for broken line dimensions.

Ⓚ TYPE A DOTTED

Used for entrance, exit and auxiliary lanes, lane drop markings and shared use bicycle paths.

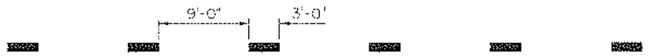

Note: Width and color shall match line extending unless otherwise noted.

Ⓛ TYPE B DOTTED

Used for lane line extensions through intersections, turn lane taper markings, edge line extensions and bulb outs.

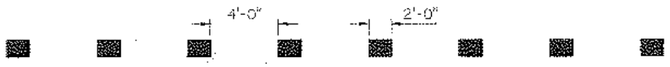

Note: Width and color shall match line extending unless otherwise noted.

GENERAL NOTES:

1. 4" Edge lines shall be placed on all roadways.
2. Place edge lines, centerlines and lane lines to avoid longitudinal joints as directed by the project engineer.
3. Edge lines in a curb and gutter section should be kept out of the gutter and clear from debris.
4. If rumble strips are used, striping details remain unchanged.
5. Centerlines shall be placed on roadways with a traveled way width of 16 feet or greater.
6. Where the clear width of a bridge is less than the clear width of the roadway, reflectorized pavement markers shall be placed adjacent to the edge line at 20' centers.
7. ⟹ indicates the direction of travel (not a pavement marker).
8. For non-interstate striping, use one Raised Reflectorized Pavement Marker.
9. White Reflectorized Pavement Marker faces same direction traffic and red faces opposing traffic.

STATE OF LOUISIANA
GARY H. LEBLANC
REG. NO. 28130
REGISTERED PROFESSIONAL ENGINEER IN CIVIL ENGINEERING
2-27-19

DESIGNED G. LEBLANC	CHECKED J. COLVIN	DETAILED K. WILLIAMS	CHECKED G. LEBLANC
PARISH	CONTROL SECTION	STATE PROJECT	
DATE 2/28/19	SHEET		

APPROVED BY CHIEF ENGINEER

PM-01 Centerline and Edgeline Markings

PAVEMENT MARKING DETAILS

TRAFFIC ENGINEERING

$$---- SUBMITTAL STAGE ------$$
$$this is the pathname including directory path and design file name$$
$DATE$ $TIME$

Ⓐ TURN ARROW AND ONLY WORD MARKING

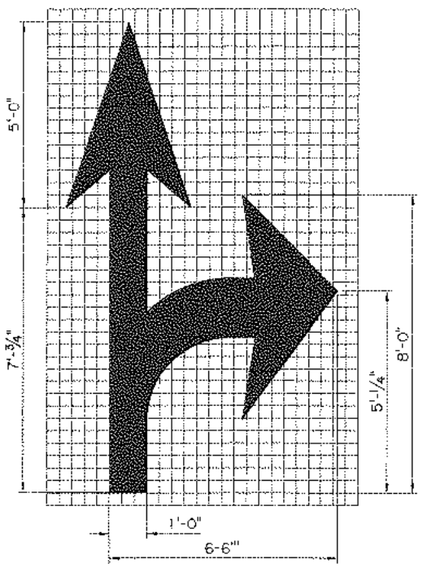

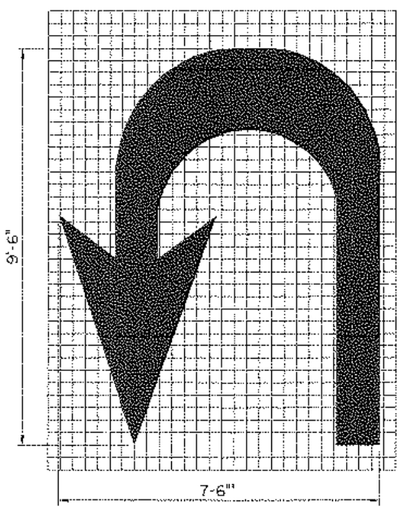

*For left turn arrow, use mirror image.

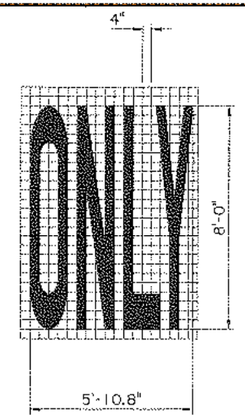

Ⓑ BIKE SYMBOL

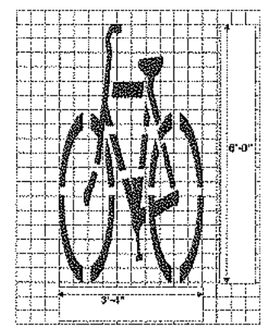

Ⓒ LANE REDUCTION ARROW

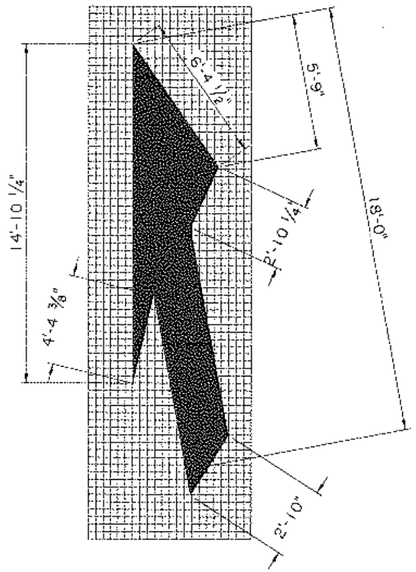

*For left lane reduction, use mirror image.

Ⓓ DIRECTIONAL ARROWS FOR ROUNDABOUTS (FISHHOOK)

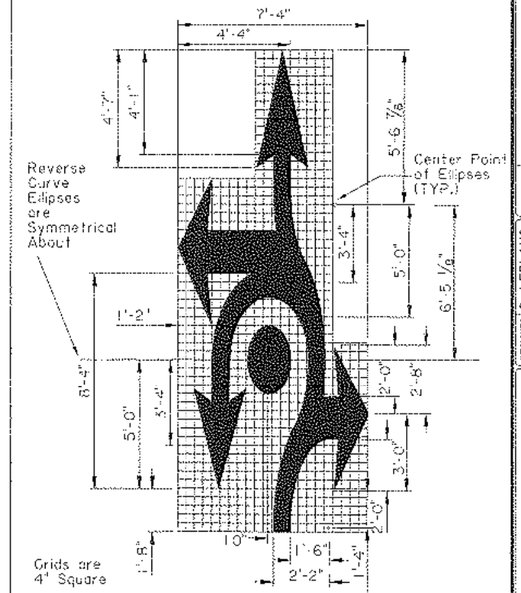

Grids are 4" Square

Assume Points Not Dimensioned to be Coincident with Grid Lines

Only Fishhook Combinations That Have Pay Items May Be Used.

Ⓔ INTERSTATE SHIELD for Non-Interstate Use

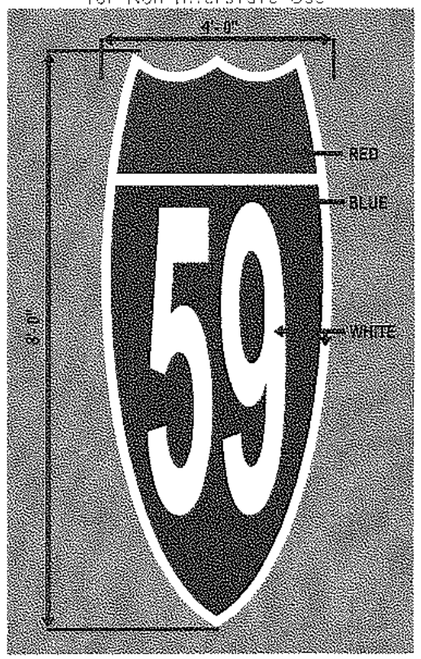

Ⓕ STATE HIGHWAY SHIELDS for Non-Interstate Use

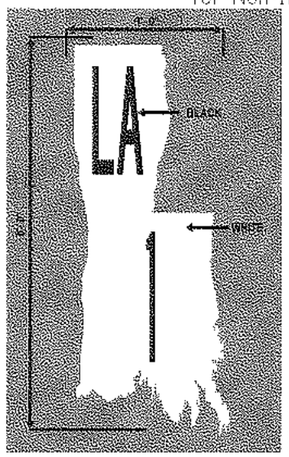

FOR USE ON DARK PAVEMENT.

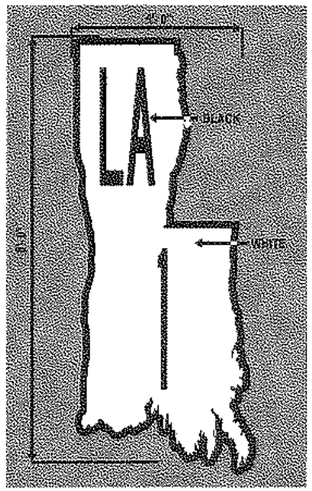

FOR USE ON LIGHT PAVEMENT.

Ⓖ STATE HIGHWAY SHIELDS for Non-Interstate Use

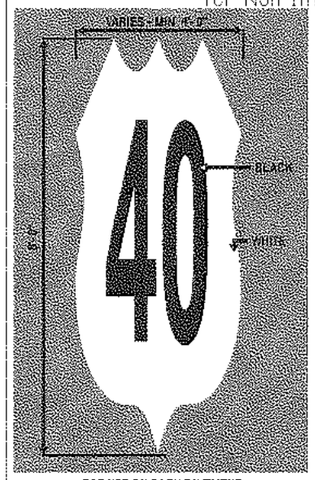

FOR USE ON DARK PAVEMENT.

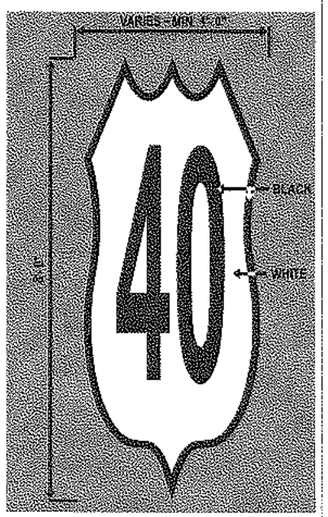

FOR USE ON LIGHT PAVEMENT.

Ⓗ RAILROAD CROSSING PAVEMENT MARKINGS

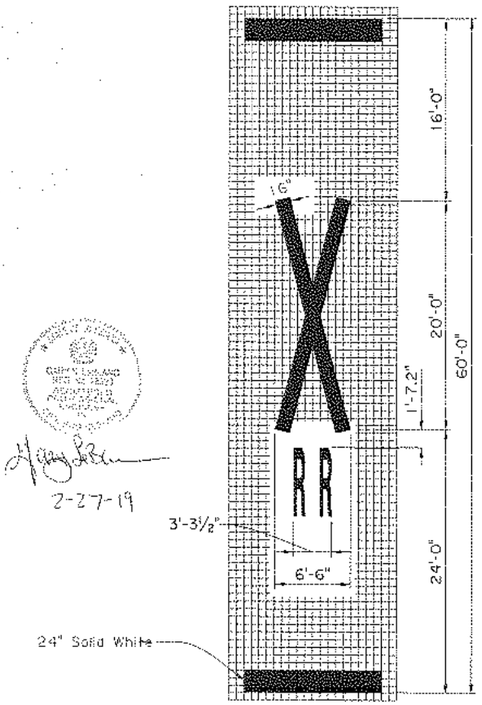

2-27-19

SHEET NUMBER	215
PARISH	
CONTROL SECTION	
STATE PROJECT	
DESIGNED G. LEBLANC	
CHECKED J. COLVIN	
DETAILED K. WILLIAMS	
CHECKED G. LEBLANC	
DATE SHEET	

DATE 2/28/19

APPROVED BY CHIEF ENGINEER

PM-02
Pavement Word and Symbol Markings for Non-Interstate Use

PAVEMENT MARKING DETAILS

TRAFFIC ENGINEERING

$$------ SUBMITTAL STAGE ------$$
$$this is the pathname including directory path and design file name$$
$DATE$ $TIME$

(A) UNSIGNALIZED INTERSECTION ON TWO LANE ROADWAY

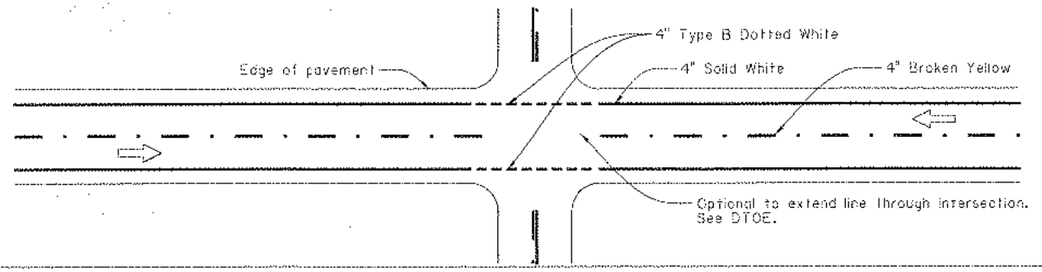

(B) SIGNALIZED INTERSECTION ON TWO LANE ROADWAY

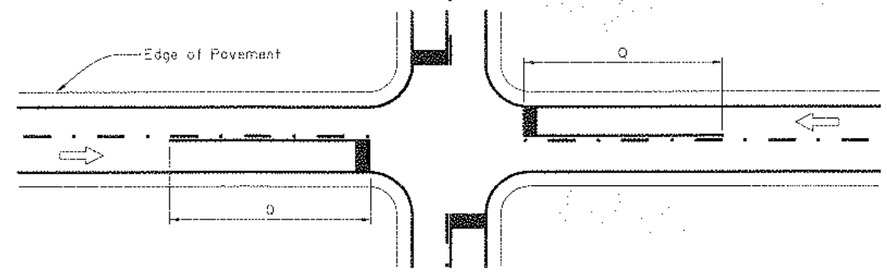

Speed Limit (mph)	Length Q (ft)
<40	100
40	125
45	175
50	250
55	325

(C) UNSIGNALIZED APPROACH LEFT TURN LANE ON TWO LANE ROADWAY

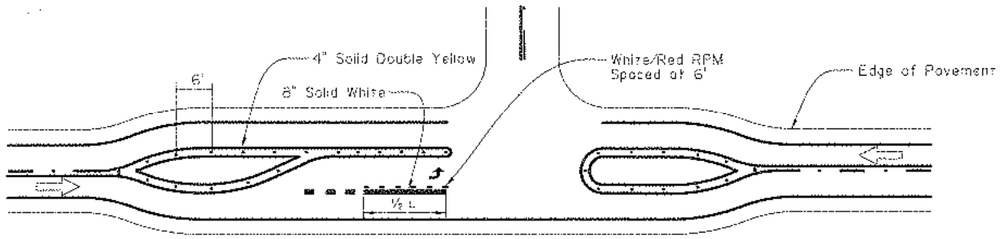

(D) STOP OR SIGNALIZED APPROACH TURN LANE DETAILS

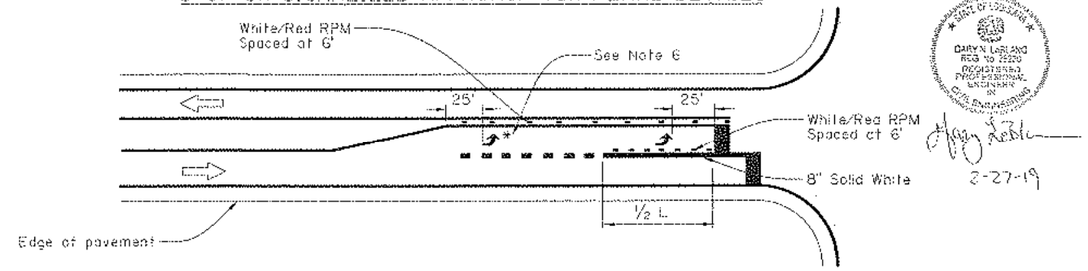

(E) TWO-WAY TURN LANE DETAILS

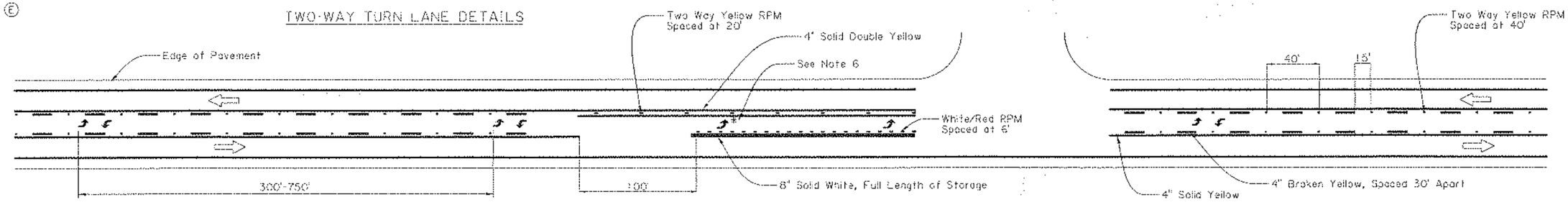

(F) R-CUT DETAILS

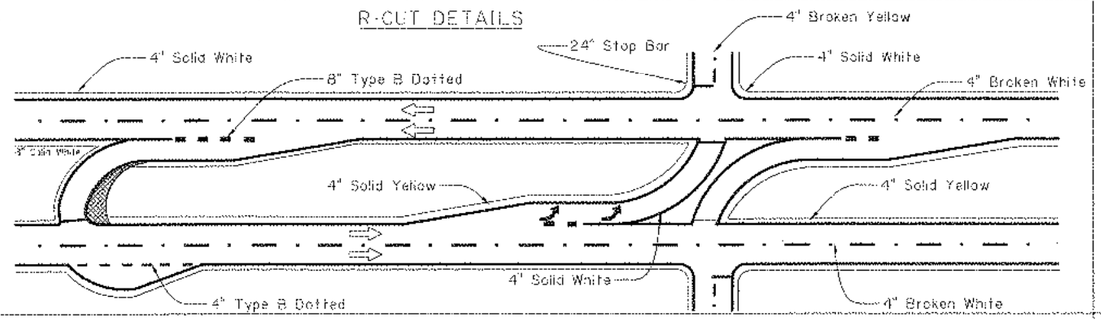

(G) SIGNALIZED DUAL LEFT AND RIGHT TURN DETAILS

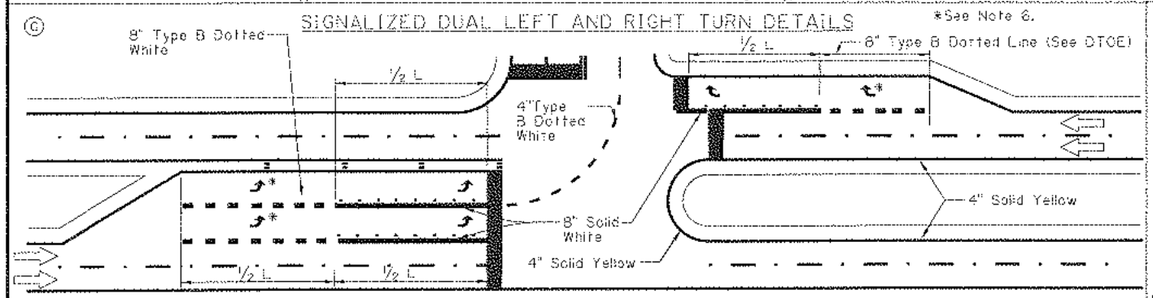

(H) UNSIGNALIZED INTERSECTION ON A FOUR LANE UNDIVIDED ROADWAY

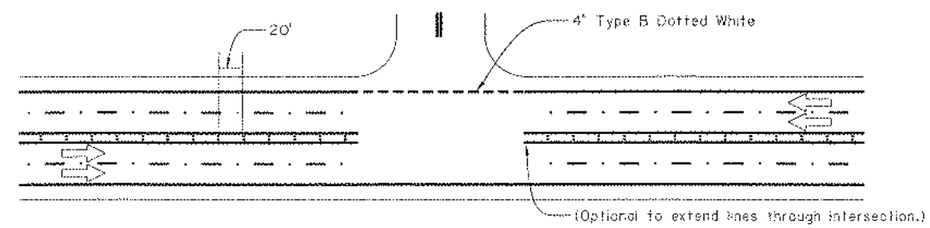

GENERAL NOTES:

1. If the minor street has edge lines, the edge lines on the major street shall wrap to meet the edge lines on the minor street.
2. Stop bars shall be 24". Stop bars shall not be placed at a distance greater than 30 feet or less than 4 feet from the nearest edge line. Stop bars at right turn lanes should be placed to provide adequate sight distance for right turning traffic.
3. The location of stop bars at left turn lanes should be determined by the turning radius needed by the side street vehicles.
4. See PM-01 for centerline and lane line details.
5. The ONLY word marking shall be used when a through lane terminates as a turn lane.
6. The asterisk (*) indicates that 2nd arrow is optional. If more than two arrows are used, minimum spacing should be 150'.
7. Edge lines should not be broken for driveways.
8. ⇨ indicates the direction of travel (not a pavement marker).
9. L equals the full length of turn lane.
10. Use of dotted lines require DTOE approval.

SHEET NUMBER	216
PARISH	
CONTROL SECTION	
STATE PROJECT	
DESIGNED G. LEBLANC / CHECKED J. COLVIN	
DETAILED K. WILLIAMS / CHECKED G. LEBLANC	
DATE	
SHEET	

DATE 2/28/19

APPROVED BY CHIEF ENGINEER

PM-06

Typical Intersection Striping Layouts

PAVEMENT MARKING DETAILS

TRAFFIC ENGINEERING

$$---- SUBMITTAL STAGE ------$$
$$this is the pathname including directory path and design file name$$
$DATE$ $TIME$

Ⓐ

TWO LANE TO FOUR LANE DIVIDED HIGHWAY

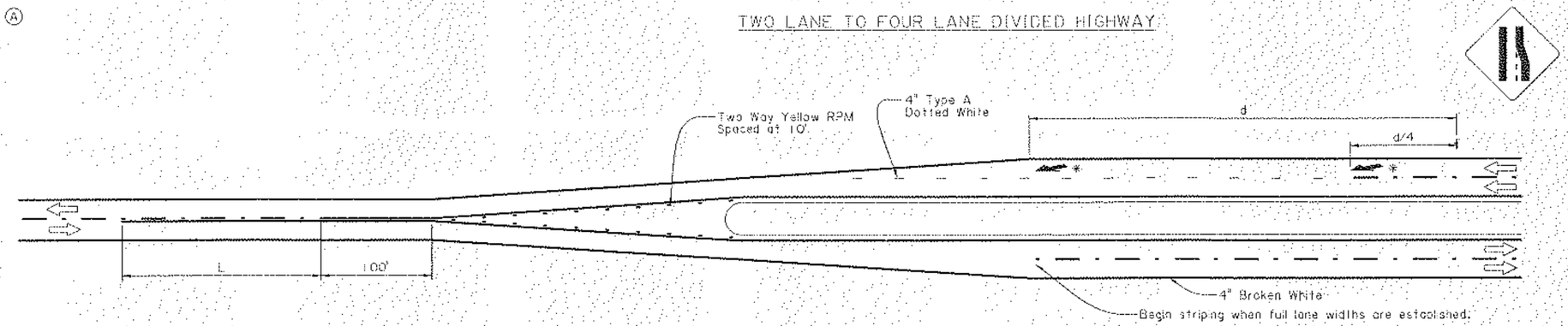

* No more than two reduction arrows shall be used per lane reduction.

85th Percentile or Speed Limit (mph)	Length of No Passing Minimum (L in feet)
25	100
30	100
35	100
40	125
45	175
50	250
55	325
60	400
65	475
70	550

Ⓑ

TWO LANE TO FOUR LANE UNDIVIDED HIGHWAY

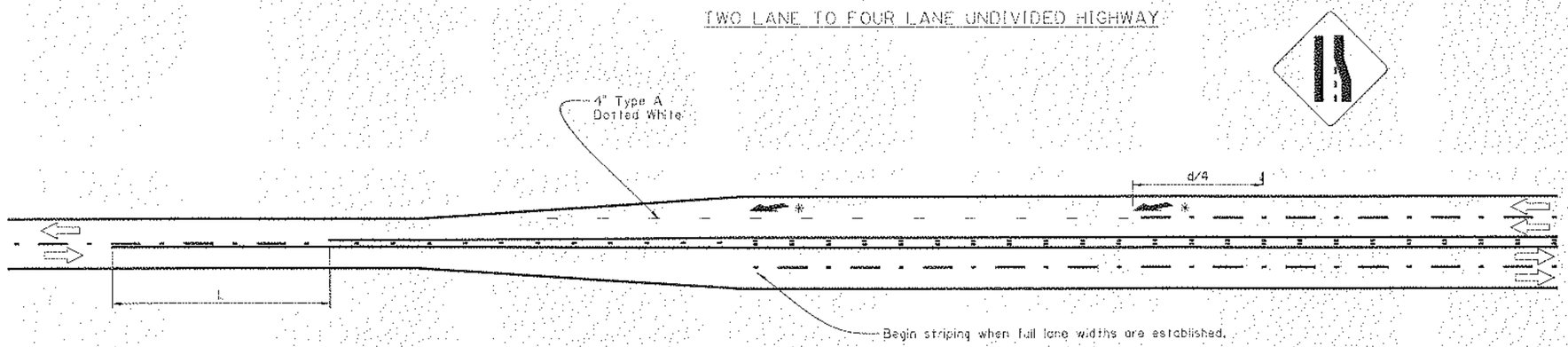

* No more than two reduction arrows shall be used per lane reduction.

85th Percentile or Speed Limit (mph)	Distance, d (ft)
20	225
25	325
30	460
35	565
40	670
45	775
50	885
55	990
60	1100
65	1200
70	1250

Ⓒ

ISLAND MARKINGS

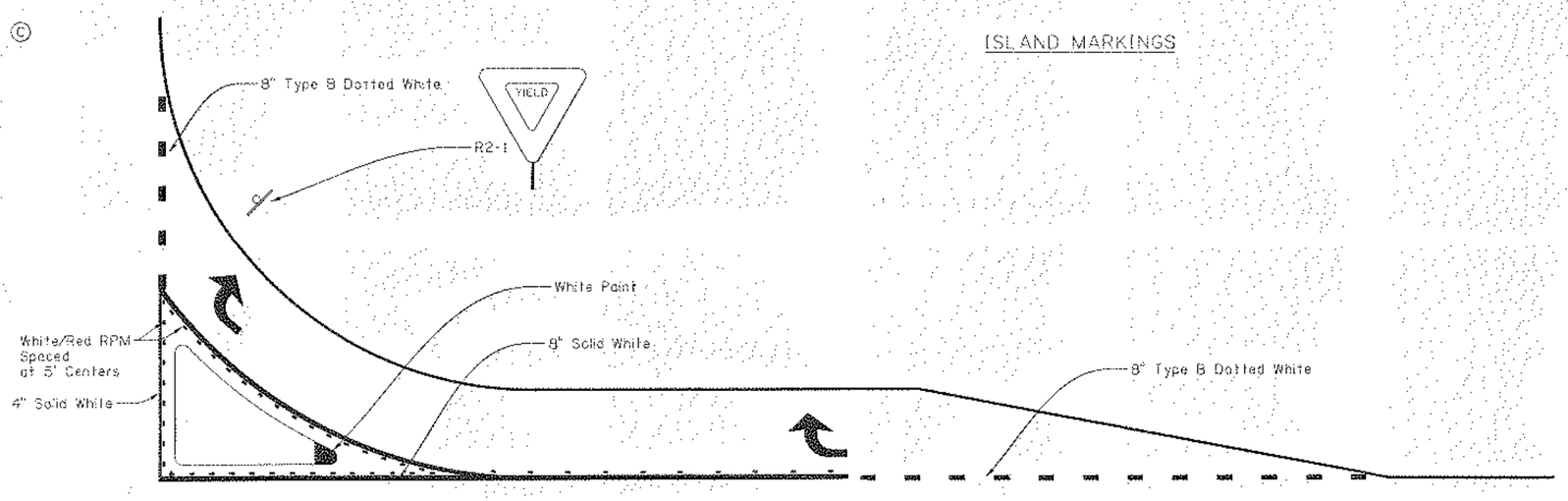

General Notes:

1. ⇨ indicates direction of travel (not a pavement marker).
2. See PM-01 for centerline and lane line details.
3. All dotted lines are optional with DTOE Approval.
4. White paint for island marking shall be a minimum of 2' width or as directed by DTOE.

STATE OF LOUISIANA
GARY N. LeBLANC
REG. No. 29220
REGISTERED PROFESSIONAL ENGINEER IN CIVIL ENGINEERING

2-27-19

SHEET NUMBER 217

PARISH | CONTROL SECTION | STATE PROJECT

DESIGNED G. LEBLANC
CHECKED J. COLVIN
DETAILED K. WILLIAMS
CHECKED G. LEBLANC
DATE
SHEET

DATE 2/28/19

APPROVED BY CHIEF ENGINEER

PM-06

Lane Reduction and Island Layouts

PAVEMENT MARKING DETAILS

TRAFFIC ENGINEERING

GENERAL NOTES - ROADSIDE TRAFFIC SIGNS

CONSTRUCTION SPECIFICATIONS: CONSTRUCTION SHALL BE IN ACCORDANCE WITH THE LOUISIANA DEPARTMENT OF TRANSPORTATION AND DEVELOPMENT, STANDARD SPECIFICATIONS FOR ROADS AND BRIDGES. LATEST EDITION EXCEPT AS SUPPLEMENTED OR AMENDED BY THE PLANS, SUPPLEMENTAL SPECIFICATIONS AND/OR SPECIAL PROVISIONS.

DESIGN SPECIFICATIONS: AASHTO STANDARD SPECIFICATIONS FOR STRUCTURAL SUPPORTS FOR HIGHWAY SIGNS, LUMINARIES AND TRAFFIC SIGNALS. 1994 AND INTERIM SPECIFICATIONS.

STEEL: STEEL SHALL CONFORM TO A.S.T.M. A-709, GRADE 36. STEEL TUBING SHALL CONFORM TO THE APPLICABLE REQUIREMENTS OF A.S.T.M. DESIGNATION A-36 OR HOT-FORMED TUBING (A-501) OR PIPE (A-53) TYPE "E" OR "S", GRADE "B" OR COLD-FORMED TUBING (A-500) GRADE "B" OR "C", UNLESS OTHERWISE NOTED.

ALUMINUM: ALL ALUMINUM EXCEPT SIGN PANELS SHALL CONFORM TO ASTM B-221, B-308, OR B-429 ALLOY 6061-T6 UNLESS OTHERWISE NOTED. SIGN PANELS SHALL BE .080" THICK ALUMINUM CONFORMING TO ASTM B-209 ALLOY 5052-H38 OR 6061-T6.

CONCRETE AND REINFORCING STEEL: CONCRETE SHALL BE CLASS "M", UNLESS OTHERWISE NOTED. DIMENSIONS RELATING TO REINFORCING STEEL FABRICATION ARE OUT TO OUT OF BAR UNLESS OTHERWISE NOTED. DIMENSIONS RELATING TO REINFORCING STEEL SPACING ARE CENTER TO CENTER OF BAR OR FACE OF CONCRETE TO CENTERLINE OF BAR. REINFORCING STEEL SHALL HAVE A MINIMUM COVERING OF 2" EXCEPT WHEN CONCRETE IS CAST AGAINST THE EARTH THEN THE COVERING WILL BE 3". ALL REINFORCING STEEL SHALL BE GRADE 60. THE FIRST DIGIT OF REINFORCING BAR NUMBER INDICATES THE BAR SIZE. THE TOP EDGES OF THE FOOTING SHALL BE CHAMFERED ¾".

CONCRETE FINISH: ALL PORTIONS OF THE FOOTINGS FOR CANTILEVERS AND TRUSSES ABOVE GROUNDLINE SHALL HAVE A FINISH IN ACCORDANCE WITH LOUISIANA SPECIFICATION. 805.08.3.

WELDING: ALL WELDING SHALL CONFORM TO THE LA. STANDARD SPECIFICATIONS, SECTION 809 AND SUPPLEMENTAL SPECIFICATIONS.

GALVANIZING: ALL STRUCTURAL STEEL AND MISCELLANEOUS STEEL SHALL BE GALVANIZED IN ACCORDANCE WITH A.S.T.M. DESIGNATION A-123. DAMAGE TO GALVANIZED SURFACES THAT ARE NOT TO BE ENCASED IN CONCRETE SHALL BE REPAIRED IN ACCORDANCE WITH LA. STANDARD SPECIFICATIONS, SECTION 811.08. ALL BOLTS, NUTS AND WASHERS SHALL BE GALVANIZED IN ACCORDANCE WITH A.S.T.M. DESIGNATION A-153 . ALL FIELD HOLES IN GALVANIZED MATERIAL SHALL BE TREATED WITH A COLD GALVANIZING COMPOUND FROM THE A.M.L.

BOLTS: UNLESS NOTED, ALL THREADED CONNECTIONS SHALL INCORPORATE A LOCKING DEVICE AND HAVE A MINIMUM OF 3 THREADS BEYOND THE NUTS. ALL BOLTS SHALL BE HIGH STRENGTH BOLTS, A.S.T.M. A-325, UNLESS OTHERWISE NOTED. ANCHOR BOLTS SHALL CONFORM TO AASHTO M314, GRADE 55 (OR APPROVED EQUAL) AND BE HOT DIP GALVANIZED TO A.S.T.M. A-153. STAINLESS STEEL FOR BOLTS SHALL CONFORM TO A.S.T.M. DESIGNATION A-320 B8, CLASS 2 TYPE 304, OR A-193 B8, CLASS 2 TYPE 304, UNLESS OTHERWISE NOTED. STAINLESS STEEL NUTS SHALL CONFORM TO A.S.T.M. DESIGNATION A-194, GRADE 8, TYPE 304. ALUMINUM BOLTS SHALL CONFORM TO A.S.T.M. F-468 ALLOY 2024-T4 AND NUTS ARE A.S.T.M. F-467 ALLOY 6061-T6 OR 6262-T9. WHERE BOLTS ARE USED ON BEVELED SURFACES, BEVELED WASHERS SHALL BE PROVIDED TO GIVE FULL BEARING TO THE HEAD AND/OR THE NUT.

RIVETS: ALL RIVETS SHALL BE ¼" DIAMETER BLIND RIVETS WITH POSITIVE MANDREL RETENTION. THE RIVET BODY AND MANDREL SHALL BE ALUMINUM WITH A ½" MAXIMUM DIAMETER DOME HEAD. THE RIVETS SHALL HAVE A MINIMUM ULTIMATE TENSILE STRENGTH = 875 LBS., AND CONFORM TO ASTM B-316 5056-H32.

BREAK-AWAY BASE: BASES FOR SIGNS LOCATED ADJACENT TO MORE THAN ONE ROADWAY (RAMP TERMINALS, INTERSECTIONS, ETC.) SHALL BE ORIENTED IN THE DIRECTION OF THE HIGHEST SPEED TRAFFIC. ALL MULTI-POST SIGNS WITH A DISTANCE BETWEEN POSTS OF 7'-0" CENTERS OR LESS SHALL HAVE BEVELED BASE CONNECTION. BASE CONNECTIONS SHALL BE WRAPPED PRIOR TO POURING THE FOOTING, WITH MATERIAL SUFFICIENT TO PREVENT CONCRETE SPLATTER ON THE BREAK-AWAY BASE ASSEMBLY.

ANCHOR BOLTS: ANCHOR BOLT NUTS TO BE TIGHTENED A MINIMUM ROTATION OF 240° (2/3 TURNS) FROM THE SNUG TIGHT CONDITION.

SIGN SHEETING: UNLESS OTHERWISE NOTED, ALL SIGN MATERIAL SHALL BE IN ACCORDANCE WITH SECTION 1015 IN THE STANDARD SPECIFICATIONS. IN ORDER TO OBTAIN AN ACCEPTABLE COLOR MATCH BETWEEN MULTIPLE PANELS ON A GUIDE SIGN, ALL OF THE BACKGROUND SHEETING FOR ANY GUIDE SIGN SHALL BE THE MINIMUM WIDTH OF THE LARGEST PANEL AND SHALL COME FROM THE SAME LOT OR RUN NUMBER FROM THE SHEETING MANUFACTURER UNLESS OTHERWISE APPROVED IN WRITING. RETRO-REFLECTIVE SHEETING SHALL BE APPLIED TO ALL PANELS IN SUCH A MANNER THAT THERE ARE NO HORIZONTAL SPLICES.

OVERLAY PANELS FULL SIGN OVERLAY PANELS SHALL BE IN ACCORDANCE WITH SECTION 729.05.3. PARTIAL SIGN OVERLAYS AND ALL SHIELDS SHALL HAVE SHIMS AT ALL RIVETS. SHIMS SHALL BE AT LEAST .080" THICK AND SIZED SO THEY WILL NOT EXTEND BEYOND EDGE OF OVERLAY. RIVETS SHALL BE AS SPECIFIED ON THIS STANDARD DETAIL SHEET.

SIGN LOCATIONS: FOR GROUND MOUNTED SIGN INSTALLATIONS, THE ENGINEER MAY ADJUST THE TYPE D AND E SIGN LOCATIONS INDICATED ON THE PLANS. THIS WILL BE ALLOWED TO AVOID PLACEMENT IN DEEP DITCHES, STEEP BACKSLOPES, TREE LINES, AND ANY OTHER UNACCOUNTED FOR FIELD CONDITIONS AND TO PROVIDE BETTER MESSAGE PRESENTATION. ANY ADJUSTMENTS MUST BE WITH THE CONCURRENCE OF THE GEOMETRIC DESIGN ENGINEER.

SIGN TYPES: TYPE A = SMALL SIGN WITH ONE POST; TYPE B = CLUSTER ASSEMBLY OF TYPE A SIGNS; TYPE D = LARGE RECTANGULAR SIGN ADJACENT TO TRAFFIC MOUNTED WITH MULTIPLE POSTS; TYPE E = SECONDARY SIGN (SUCH AS AN EXIT NUMBER PANEL) ATTACHED TO A LARGE RECTANGULAR PRIMARY SIGN; DELINEATOR, MILEPOST AND OBJECT MARKER SIGNS ARE NOT COVERED UNDER TRAFFIC SIGNS. SEE STANDARD PLAN HS-03.

MISCELLANEOUS: THE CONTRACTOR SHALL MARK THE DATE OF FABRICATION, SHEETING MANUFACTURER CODE, AND SIZE OF SIGN ON THE BACK OF EACH SIGN. FOR EXTRUDED PANEL SIGNS THE LETTER HEIGHT SHALL BE 2". FOR ALL OTHER FLAT SHEETING SIGNS, THE LETTER HEIGHT SHALL BE ¾". THE SIGN ID NUMBERS SHALL FOLLOW THE ABOVE REQUIREMENTS BUT SHALL HAVE A BLUE BACKGROUND WITH WHITE NUMBERS. ALL MARKINGS SHALL HAVE A CLEAR UV PROTECTIVE FILM INSTALLED OVER THEM. SEE DETAIL "A" SHEET 5 OF 17.

POST HINGE SPLICE ON MULTI-POST SIGNS WITH ALL POSTS CONNECTED BY A SECONDARY SIGN SHALL BE LOCATED BELOW THE SECONDARY SIGN. STUB POST SHALL BE ASSEMBLED TO SIGN POST WITH REQUIRED BOLTS AND ONE FLAT WASHER ON EACH BOLT BETWEEN PLATES PRIOR TO SHIPMENT. POST SPLICE SLIP PLATE SHALL BE ASSEMBLED TO MINIMUM BOLT TENSION IN SHOP PRIOR TO SHIPMENT. SIGN POST SHALL BE SHIPPED TO JOB SITE ASSEMBLED WITH ALL HARDWARE REQUIRED IN PLACE AND SECURED. EXPOSED ENDS OF ALL PIPE SHALL BE CAPPED. USE OF SECTIONS PROVIDING EQUAL OR GREATER STRENGTH FOR ANY MEMBER DESIGNATED ON THE PLANS SHALL BE SUBMITTED TO THE BRIDGE ENGINEER FOR APPROVAL.

ALL DIMENSIONS REQUIRED FOR SATISFACTORY INSTALLATION SHALL BE VERIFIED IN THE FIELD BY THE CONTRACTOR PRIOR TO THE FABRICATION. ADJUSTMENTS SHALL BE MADE AS DIRECTED BY THE ENGINEER.

ALL ALUMINUM SURFACES PLACED IN CONTACT WITH, OR FASTENED TO UNGALVANIZED STEEL MEMBERS SHALL BE THOROUGHLY COATED WITH AN APPROVED ALUMINUM IMPREGNATED CAULKING COMPOUND. PAINT ALUMINUM SECTIONS IN CONTACT WITH CONCRETE WITH A HEAVY COAT OF AN ALKALI RESISTANT BITUMINOUS PAINT OR A COAT OF ZINC CHROMATE PAINT AND ALLOW TO DRY BEFORE PLACING. ALUMINUM ALLOYS SHALL NOT BE PLACED IN CONTACT WITH COPPER, COPPER BASED ALLOYS, LEAD, OR NICKEL.

SHOP DRAWINGS: NOT REQUIRED FOR SIGN BACKING AND SMALL GROUND MOUNTED SIGN SUPPORTS, UNLESS FABRICATOR INTENDS TO DEVIATE FROM THE DETAILS HEREIN. SHOP DRAWING ARE REQUIRED FOR ALL STRUCTURE MOUNTED SIGNS.

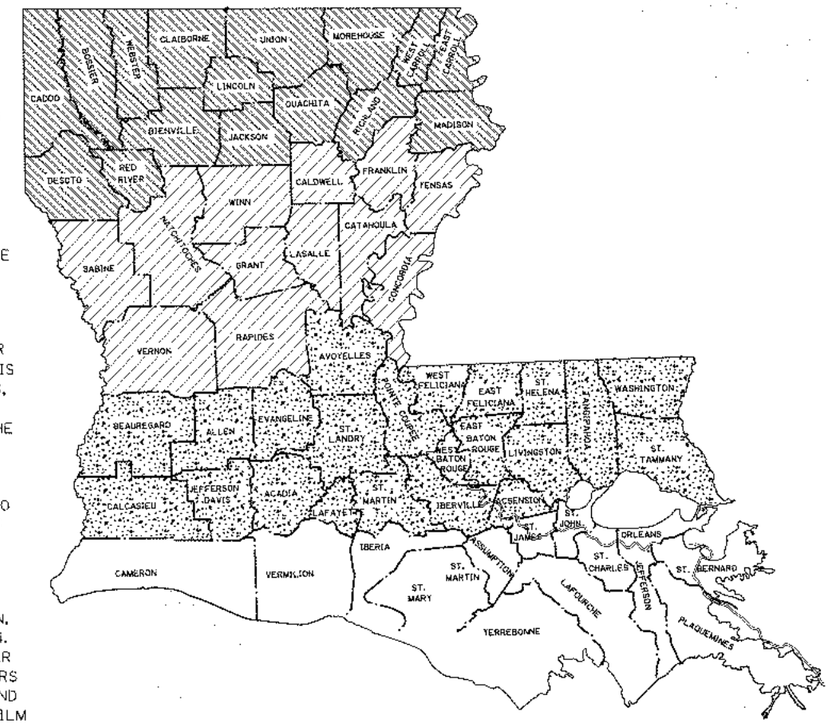

WIND LOAD MAP

WIND LOAD MAP LEGEND			
SYMBOL	ROADSIDE MOUNTED		
	ZONE	WIND VELOCITY (MPH)⊗	WIND LOAD (PSF) △
	1	70	20
	2	80	27

⊗ 25 YEAR MEAN RECURRENCE INTERVAL

△ INCLUDES C_d = 1.2

SHEET	BRIDGE STANDARD INDEX NO.	DESCRIPTION
1 OF 17	BD.2.7.2.0.1	WIND LOAD MAP & GENERAL NOTES
2 OF 17	BD.2.7.2.0.2	PANEL DETAILS (TYPE A & B SIGNS)
3 OF 17	BD.2.7.2.0.3	MOUNTING DETAILS (TYPE A & B SIGNS)
4 OF 17	BD.2.7.2.0.4	SPACING OF POSTS FOR GROUND MOUNTED SIGNS
5 OF 17	BD.2.7.2.0.5	EXTRUDED ALUMINUM SIGNS (TYPE D & E SIGNS)
6 OF 17	BD.2.7.2.0.6	EXTRUDED ALUMINUM PANELS (TYPE D & E SIGNS)
7 OF 17	BD.2.7.2.0.7	ROADSIDE MOUNTED SIGNS (TYPE A, B, & D SIGNS)
8 OF 17	BD.2.7.2.0.8	ROADSIDE MOUNTED SIGN DETAILS (TYPE A & B SIGNS)
9 OF 17	BD.2.7.2.0.9	ROADSIDE MOUNTED SIGN DETAILS (TYPE D SIGNS)
10 OF 17	BD.2.7.2.0.10	SQUARE TUBE SIGN DETAILS
11 OF 17	BD.2.7.2.0.11	Z - BRACKET SIGN SUPPORT (F - SHAPE BARRIER)
12 OF 17	BD.2.7.2.0.12	Z - BRACKET SIGN SUPPORT (F - SHAPE BARRIER)
13 OF 17	BD.2.7.2.0.13	Z - BRACKET SIGN SUPPORT (POST AND RAIL BARRIER)
14 OF 17	BD.2.7.2.0.14	Z - BRACKET SIGN SUPPORT (POST AND RAIL BARRIER)
15 OF 17	BD.2.7.2.0.15	CONTRAFLOW SIGNS (GROUND MOUNTED)
16 OF 17	BD.2.7.2.0.16	CONTRAFLOW SIGNS (F - SHAPE BARRIER)
17 OF 17	BD.2.7.2.0.17	CONTRAFLOW SIGNS (POST AND RAIL BARRIER)

SHEET NUMBER 218
PARISH
CONTROL SECTION
STATE PROJECT
DESIGN K. BRAUNER
CHECK C. GUIDRY
DETAIL K. BRAUNER
CHECK C. GUIDRY
REVIEW C. BOURGEOIS
SHEETS 1 OF 17
STATE OF LOUISIANA KURT M. BRAUNER License No. 30567 PROFESSIONAL ENGINEER IN CIVIL ENGINEERING
6/24/22
APPROVED BY CHIEF ENGINEER
7/1/2022
DATE
WIND LOAD MAP & GENERAL NOTES
ROADSIDE SIGNING STANDARDS
STANDARD PLAN
DOTD LOUISIANA DEPARTMENT OF TRANSPORTATION & DEVELOPMENT
BRIDGE AND STRUCTURAL DESIGN

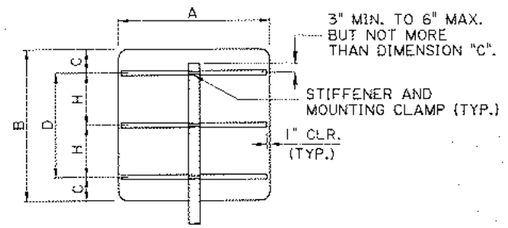

SQUARE, RECTANGLE, CIRCLE, OCTAGON AND ROUTE MARKERS

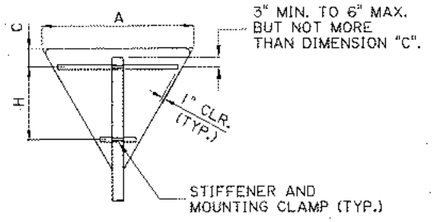

EQUILATERAL TRIANGLE

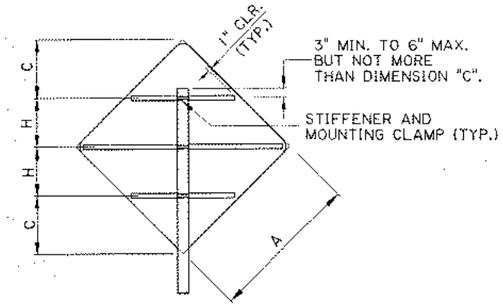

DIAMOND

NOTES:

NO BOLTS SHALL BE PLACED THROUGH FACE OF SIGN.

ALL TRACK HEAD BOLTS SHALL HAVE HEADS DESIGNED TO FIT AND TRANSMIT LOAD TO BOLT SLOTS IN THE STIFFENER.

STIFFENERS SHALL BE ALUMINUM EXTRUSIONS AS DETAILED ON THIS SHEET UNLESS OTHERWISE NOTED.

MOUNTING CLAMPS REQUIRED AT EACH HORIZONTAL STIFFENER.

SIGN PANELS AND POSTS SHALL BE THE SIZE REQUIRED ON THE PLANS AND SUMMARY SHEET.

SEE OTHER SHEETS FOR MOUNTING DETAILS.

ALL SIGNS THAT REQUIRE BACKING SHALL BE INSTALLED WITH RIVETS.

THIS SHEET TO BE USED WITH WIND LOAD MAP AND GENERAL NOTES SHEET.

SQUARE, RECTANGLE, CIRCLE, OCTAGON AND ROUTE MARKERS

A (IN.)	B (IN.)	C (IN.)	D (IN.)	H (IN.)	STIFFENER NUMBER REQUIRED
VARIABLE 12" TO 48"	6	3			1
	12	6			1
	15	7.5			1
	18	9			1
	24	6	12		2
	30	7.5	15		2
	36	7.5	21		2
	48	10	28		2
	60	9	42	21	3
	72	11	6 △	25	3
	84	10.5	6 △	21	4
48	96	12	6 △	24	4

△ LOCATION OF BORDER ANGLE FROM EDGE

EQUILATERAL TRIANGLE

A (IN.)	C (IN.)	H (IN.)	STIFFENER NUMBER REQUIRED
24	8		1
30	6	10	2
36	6	12.5	2
48	6	23	2
60	6	33.5	2

DIAMOND

A (IN.)	C (IN.)	H (IN.)	STIFFENER NUMBER REQUIRED
24	10	6.97	1
30	12	9.21	2
36	14	11.46	2
48	18.5	15.44	3
60	22.5	19.93	3

TYPE A SIGNS

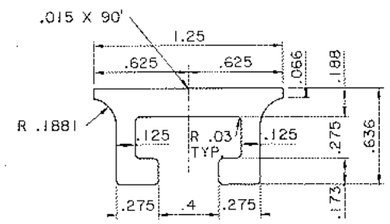

EXTRUDED CHANNEL DETAIL

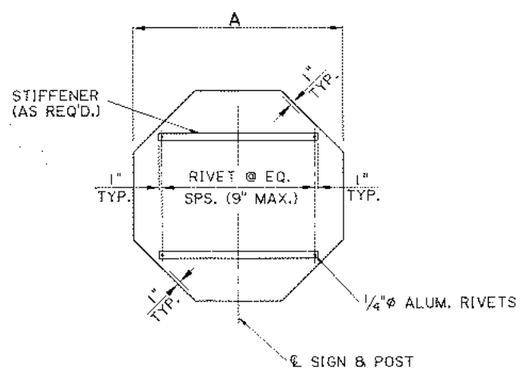

TYPICAL SIGN BACKING DETAIL

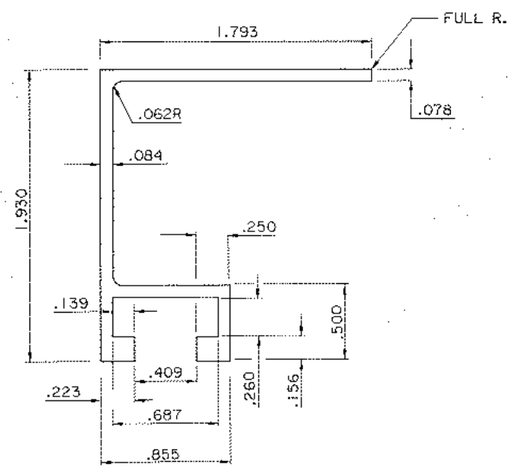

EXTRUSION STIFFENER

THIS STIFFENER REQUIRES THE USE OF RIVETS

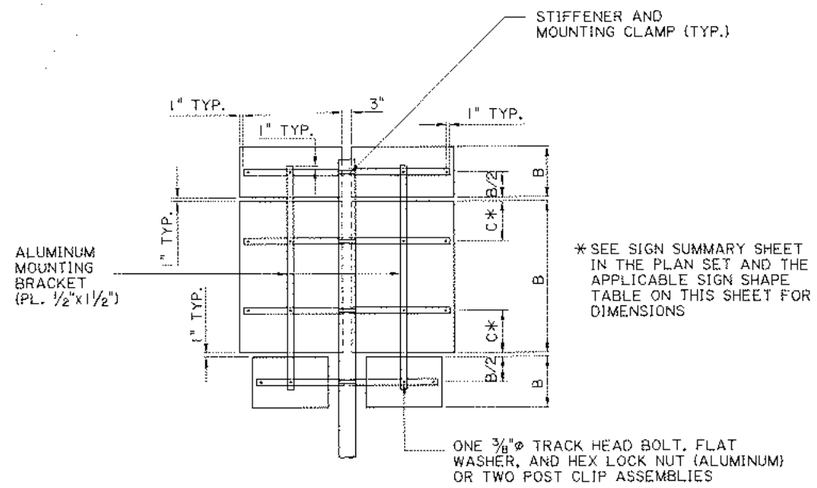

TYPE B SIGN

CLUSTER ASSEMBLY

SHEET NUMBER 219

PARISH | CONTROL SECTION | STATE PROJECT

DESIGN K. BRAUNER | CHECK C. GUIDRY | DETAIL K. BRAUNER | CHECK C. GUIDRY | REVIEW C. BOURGEOIS | SHEET 2 OF 17

STATE OF LOUISIANA
KURT M. BRAUNER
License No. 30567
PROFESSIONAL ENGINEER
IN
CIVIL ENGINEERING
6/24/22

APPROVED BY CHIEF ENGINEER: 7/1/2022

PANEL DETAILS (TYPE A & B SIGNS)

ROADSIDE SIGNING STANDARDS

DOTD
LOUISIANA DEPARTMENT OF TRANSPORTATION & DEVELOPMENT
BRIDGE AND STRUCTURAL DESIGN

IP_PWP:d0964073\Roadside Traffic Signs 02.dgn
6/24/2022 09:14

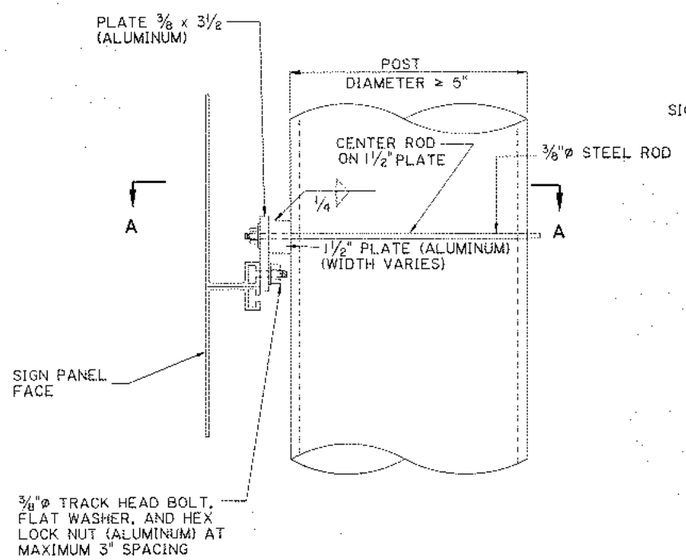

ELEVATION
(TYPICAL AT EACH STIFFENER)

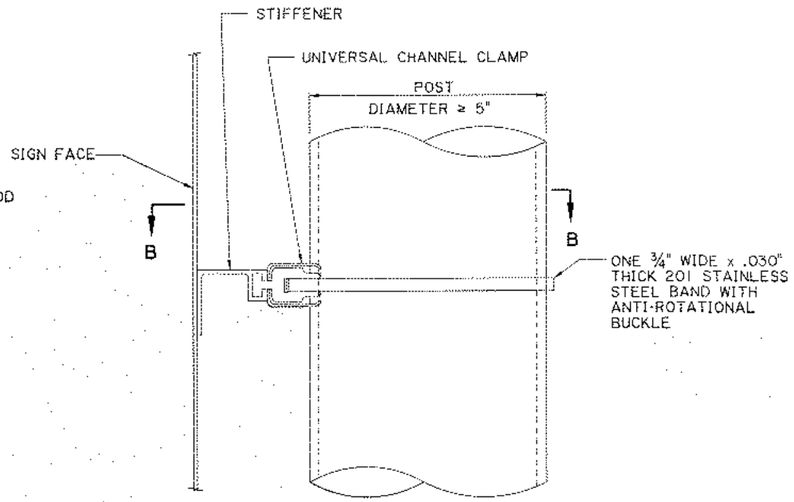

ELEVATION
TYPICAL AT EACH STIFFENER

NOTES:
NO BOLTS SHALL BE PLACED THROUGH FACE OF SIGN.

ALL TRACK HEAD BOLTS SHALL HAVE HEADS DESIGNED TO FIT AND TRANSMIT LOAD TO BOLT SLOTS IN THE STIFFENER.

MOUNTING CLAMP REQUIRED AT EACH HORIZONTAL STIFFENER.

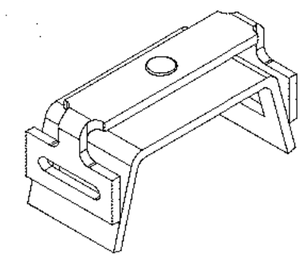

STAINLESS STEEL BANDING

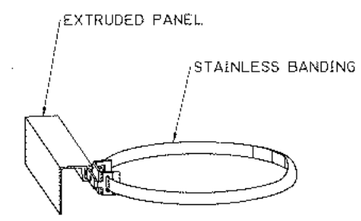

EXTRUDED PANEL BANDING CLIP

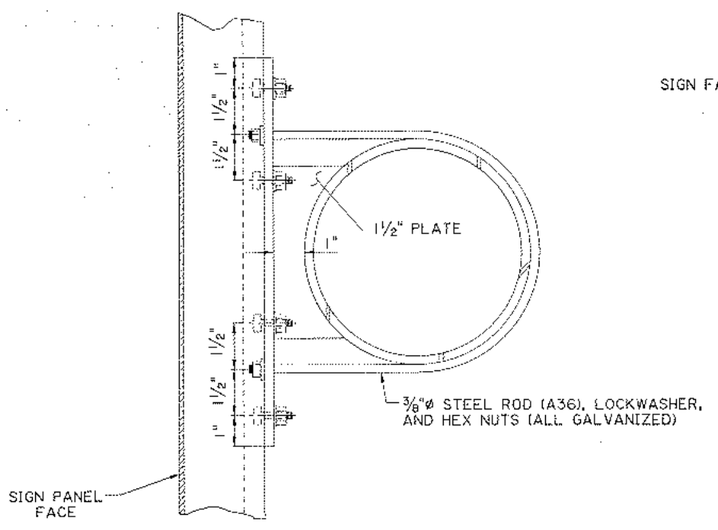

SECTION A-A

MOUNTING DETAIL (TYPE I)

FOR NON-TAPERED ROUND METAL POST SIZES ≥ 5" DIAMETER AND SIGNS > 20 SQ. FT.

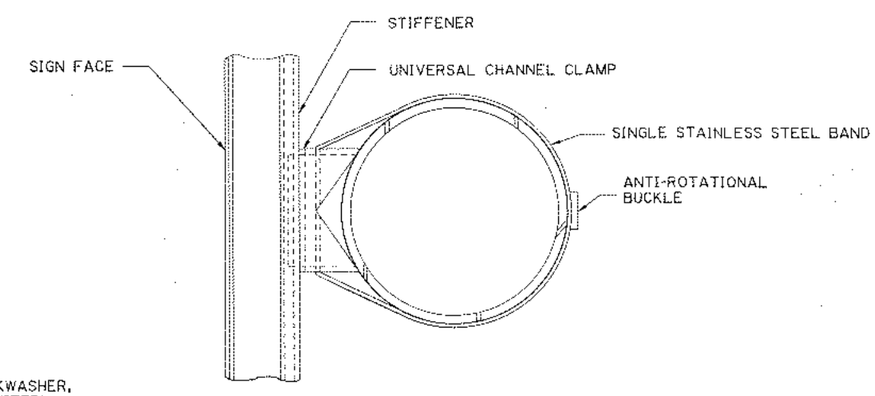

SECTION B-B

MOUNTING DETAIL (BAND TYPE)

FOR ALL POSTS ≥ 5" AND WITH SIGN AREAS ≤ 20 SQ. FT. OR LESS THAN 4 FEET WIDE

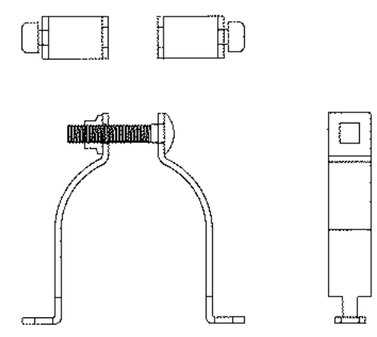

ROUND POST CLAMPS

SHEET NUMBER 220

PARISH | CONTROL SECTION | STATE PROJECT

DESIGN K. BRAUNER | CHECK C. GUIDRY | DETAIL K. BRAUNER | CHECK C. GUIDRY | REVIEW C. BOURGEOIS | SHEET 3 OF 17

STATE OF LOUISIANA
KURT M. BRAUNER
License No. 32067
PROFESSIONAL ENGINEER
IN
CIVIL ENGINEERING
6/24/22

APPROVED BY CHIEF ENGINEER
7/1/2022
DATE

MOUNTING DETAILS (TYPE A & B SIGNS)

ROADSIDE SIGNING STANDARDS

STANDARD PLAN

DOTD
LOUISIANA DEPARTMENT OF TRANSPORTATION & DEVELOPMENT
BRIDGE AND STRUCTURAL DESIGN

09:16
6/24/2022
IP PWP:d0966073\Roadside Traffic Signs 03.dgn

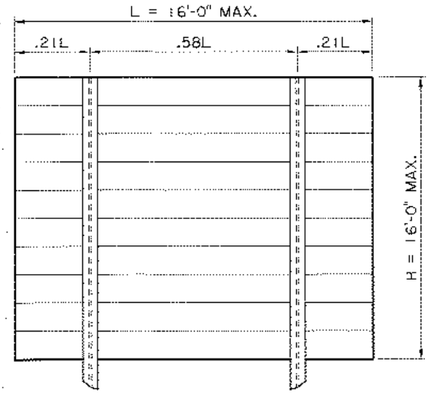

2 POSTS

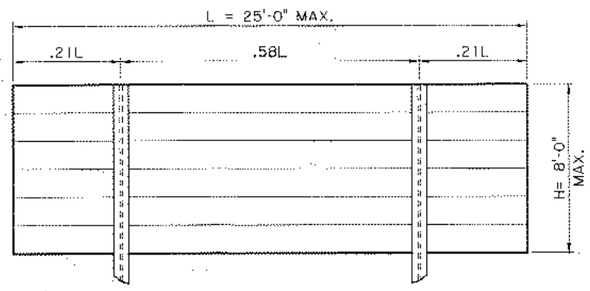

2 POSTS

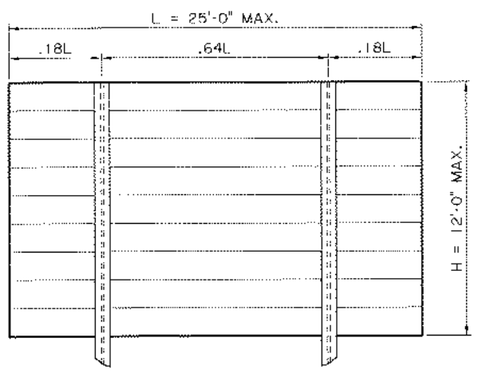

2 POSTS

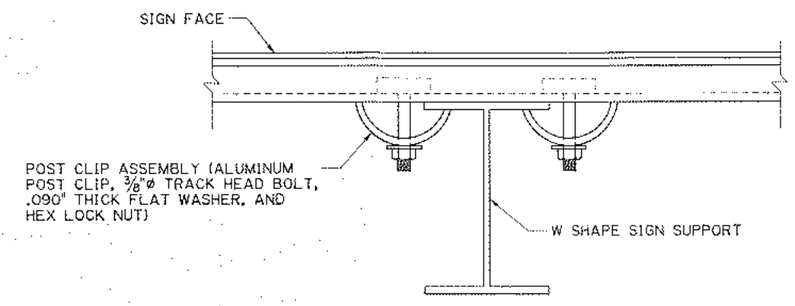

MOUNTING DETAIL (TYPE II)

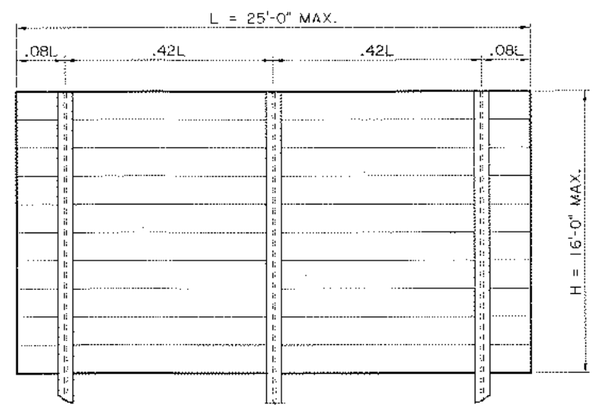

3 POSTS

SHEET NUMBER 221

PARISH | CONTROL SECTION | STATE PROJECT

DESIGN K. BRAUNER
CHECK C. GUIDRY
DETAIL K. BRAUNER
CHECK C. GUIDRY
REVIEW C. BOURGEOIS
SHEET # 4 OF 17

STATE OF LOUISIANA
KURT M. BRAUNER
License No. 32667
PROFESSIONAL ENGINEER
IN
CIVIL ENGINEERING
6/24/22

APPROVED BY CHIEF ENGINEER
DATE: 7/1/2022

STATE OF LOUISIANA

SPACING OF POSTS FOR GROUND MOUNTED SIGNS

STANDARD BY AND ROADSIDE SIGNING STANDARDS

DOTD
LOUISIANA DEPARTMENT OF TRANSPORTATION & DEVELOPMENT
BRIDGE AND STRUCTURAL DESIGN

IP PWP:d09640 73\Roadside Traffic Signs 04.dgn
6/24/2022 09:18

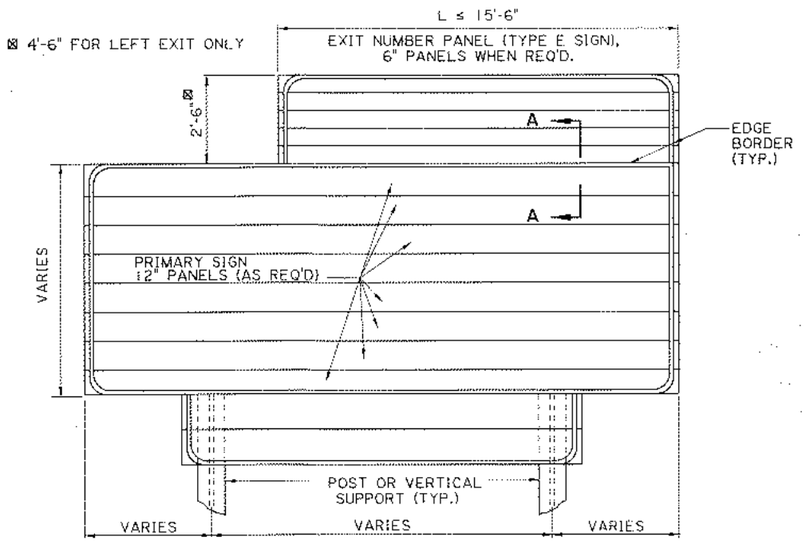

FRONT ELEVATION

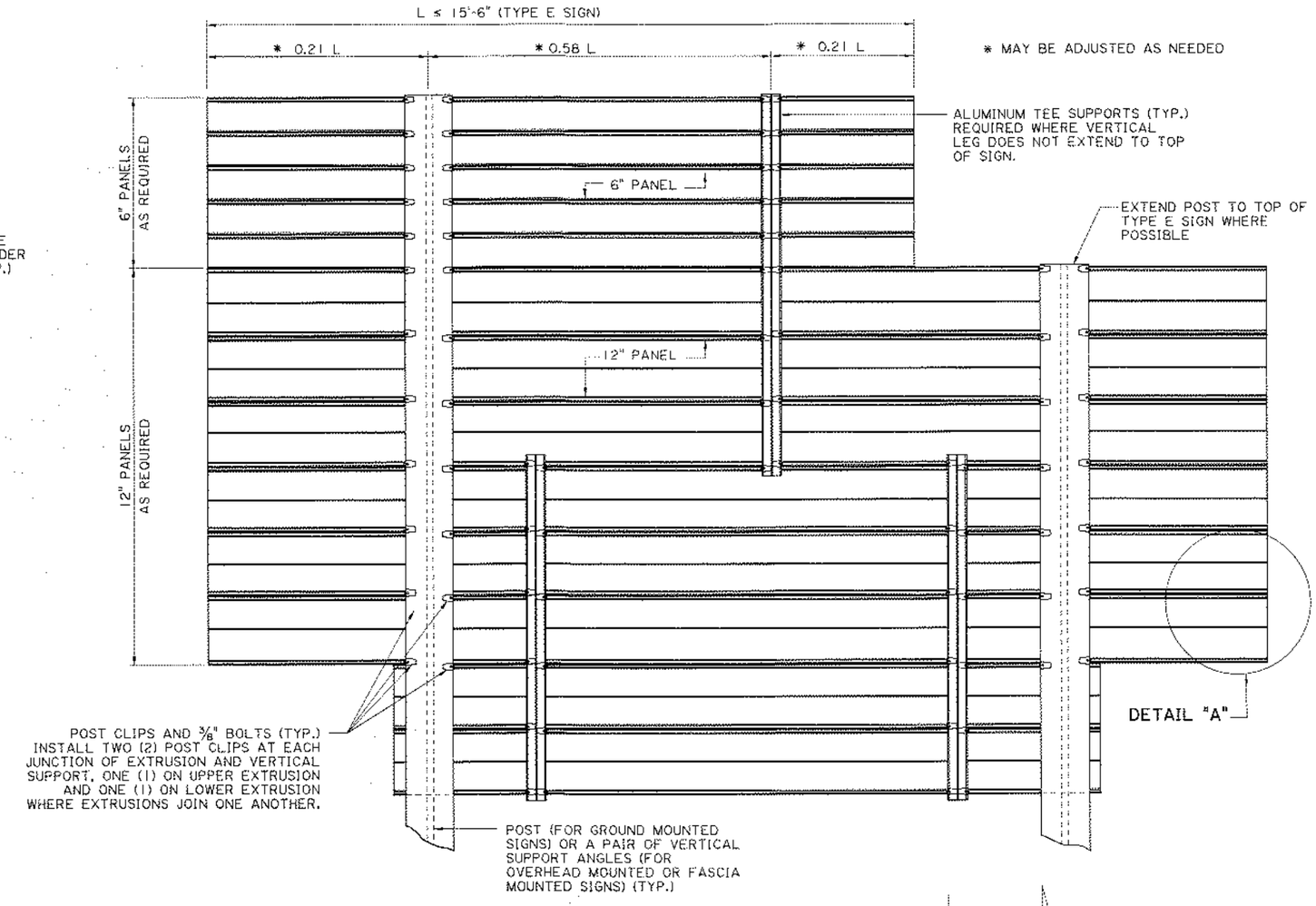

BACK ELEVATION

NOTES:

EXTRUDED ALUMINUM PANELS WILL BE ALLOWED AS AN ALTERNATE TO SIGN PANEL DETAILS FOR TYPE "D" AND "E" GROUND MOUNTED SIGNS ONLY. NUMBER AND SPACING OF POST SHALL MATCH THOSE SHOWN FOR PANEL DETAILS.

ALL 12" EXTRUDED ALUMINUM PANELS SHALL BE ALUMINUM ALLOY 6063-T6.
ALL POST CLIPS SHALL BE ALUMINUM ALLOY 356-T6.
ALL EXTRUDED PANEL BOLTS AND POST CLIP BOLTS SHALL BE ALUMINUM.
ALL HEX LOCK NUTS SHALL BE ALUMINUM ALLOY 2017-T4.
ALL POST CLIP BOLTS SHALL BE TORQUED TO A MINIMUM OF 175 IN-LBS.
ALL POST CLIP BOLTS SHALL HAVE HEADS DESIGNED TO FIT THE BOLT SLOTS IN THE PANELS.

TYPE E SIGNS SHALL BE ATTACHED TO PRIMARY SIGNS WITH ALUMINUM TEE SUPPORTS, (5'-1" LENGTH), POST CLIPS, POST CLIP BOLTS, AND HEX LOCK NUTS.

FOR NEW OVERHEAD SIGNS (INCLUDING FASCIA MOUNTED) INCORPORATING EXISTING MOUNTS, THE CONTRACTOR WILL PLACE VERTICAL SUPPORT ANGLES WITHOUT SPLICES THAT EXTEND THE FULL HEIGHT OF THE EXTRUDED PRIMARY SIGN PANEL.

FOR NEW TYPE D SIGNS INCORPORATING EXISTING MOUNTS, THE EXISTING POST MAY BE REUSED IF THE NEW SIGN PANEL DOES NOT EXTEND OVER 2'-0" ABOVE THE EXISTING POST. SUCH NEW SIGNS WILL BE MOUNTED TO ALUMINUM TEE SUPPORTS BEGINNING AT THE TOP OF THE SIGN AND EXTENDING DOWNWARD FROM THE TOP OF THE POST THE DISTANCE THE NEW SIGN IS ABOVE THE EXISTING POST PLUS 1'-0". ONE TEE IS REQUIRED ADJACENT TO EACH EXISTING POST AND ATTACHED WITH POST CLIPS AS SHOWN FOR NEW TYPE E SIGNS. IF THE NEW SIGN EXTENDS OVER 2'-0" ABOVE THE EXISTING POST, THE CONTRACTOR IS TO REPLACE THE EXISTING POST AND MEET DETAILS FOR NEW CONSTRUCTION.

REFLECTIVE SHEETING FOR EXTRUDED PANELS: ONLY SPLICES THAT OCCUR AS PART OF THE MANUFACTURING PROCESS SHALL BE PERMITTED. A MAXIMUM OF TWO VERTICAL SPLICES ON ANY ONE SIGN FABRICATED USING EXTRUDED PANELS, WITH ONE SPLICE PER EXTRUDED PANELS SHALL BE ALLOWED. ALL "EXIT ONLY" PANELS THAT ARE DETAILED WITH THE TOP AND/OR BOTTOM EDGE NOT AT AN EXTRUDED PANEL EDGE SHALL BE FABRICATED FROM .080" ALUMINUM AND ATTACHED AS AN OVERLAY. ALL OTHER "EXIT ONLY" PANELS SHALL BE FABRICATED BY APPLYING THE YELLOW REFLECTIVE SHEETING ON THE EXTRUDED PANELS. THE REFLECTIVE SHEETING APPLIED TO EXTRUDED PANELS SHALL EXTEND APPROXIMATELY 1/4" OVER EACH SIDE AND SHALL BE ADHERED TO THE SIDE OF THE PANEL.

THIS SHEET TO BE USED WITH WIND LOAD MAP AND GENERAL NOTE SHEET.

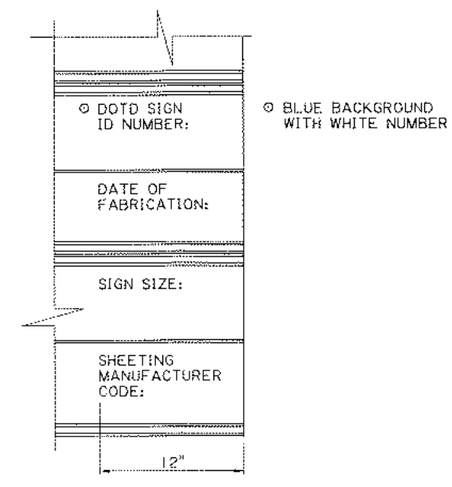

DETAIL "A"

2" LETTERING IN LAST 12" OF SIGN, SEE MISCELLANEOUS NOTE ON GENERAL NOTE SHEET OF TRAFFIC SIGN DETAILS.

SHEET NUMBER 222

DESIGN K. BRAUNER
CHECK C. GUIDRY
DETAIL K. BRAUNER
CHECK C. GUIDRY
REVIEW C. BOURGEOIS
SHEETS 5 OF 17

STATE OF LOUISIANA
KURT M. BRAUNER
License No. 30567
PROFESSIONAL ENGINEER
IN
CIVIL ENGINEERING
6/24/22

APPROVED BY CHIEF ENGINEER:
DATE: 7/1/2022

EXTRUDED ALUMINUM SIGNS (TYPE D & E SIGNS)

STANDARD PLAN NO. ROADSIDE SIGNING STANDARDS

DOTD
LOUISIANA DEPARTMENT OF TRANSPORTATION & DEVELOPMENT
BRIDGE AND STRUCTURAL DESIGN

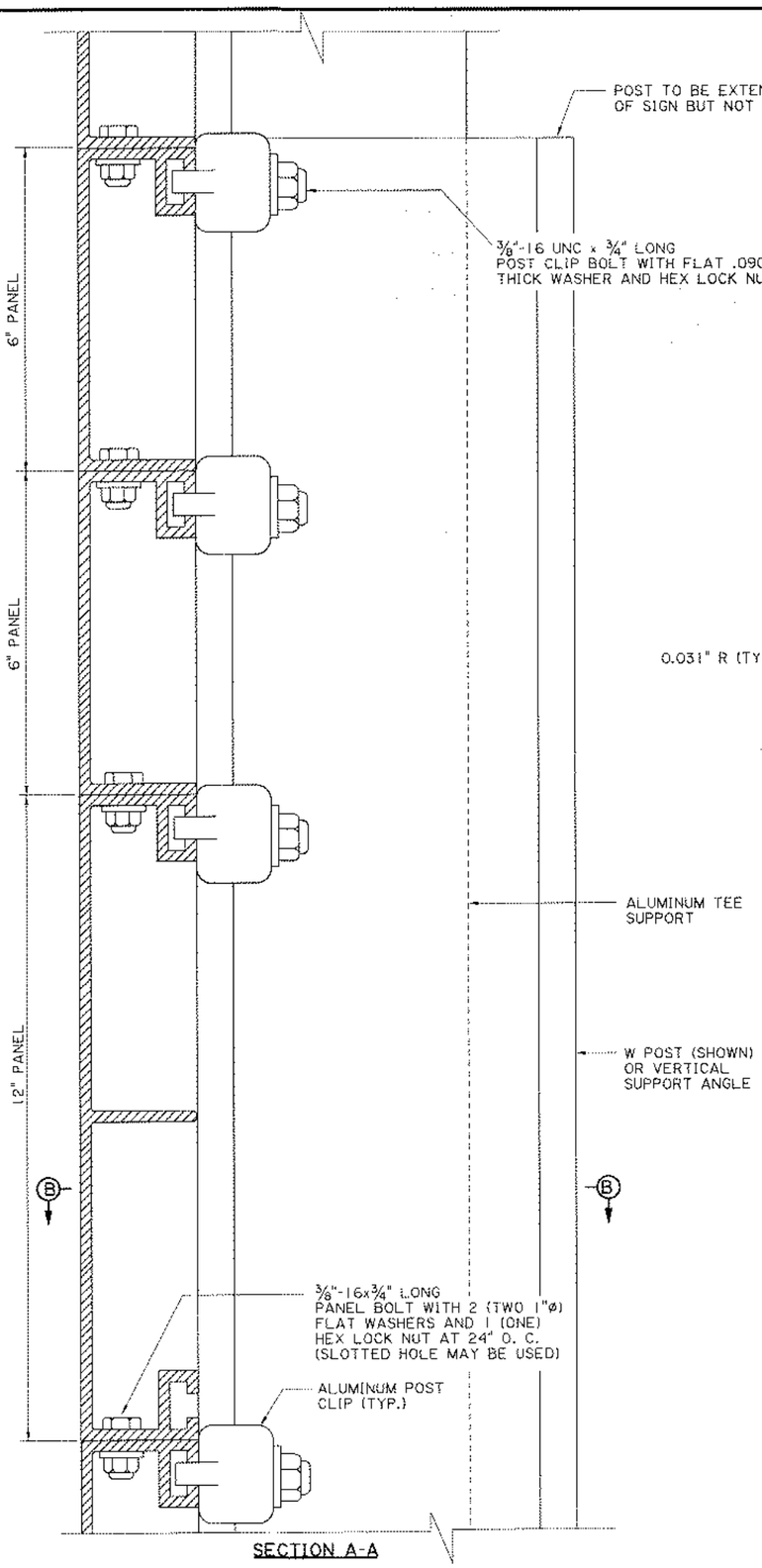

SECTION A-A

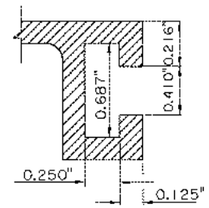

DETAIL "A"

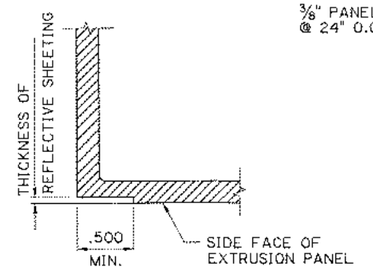

DETAIL "B"

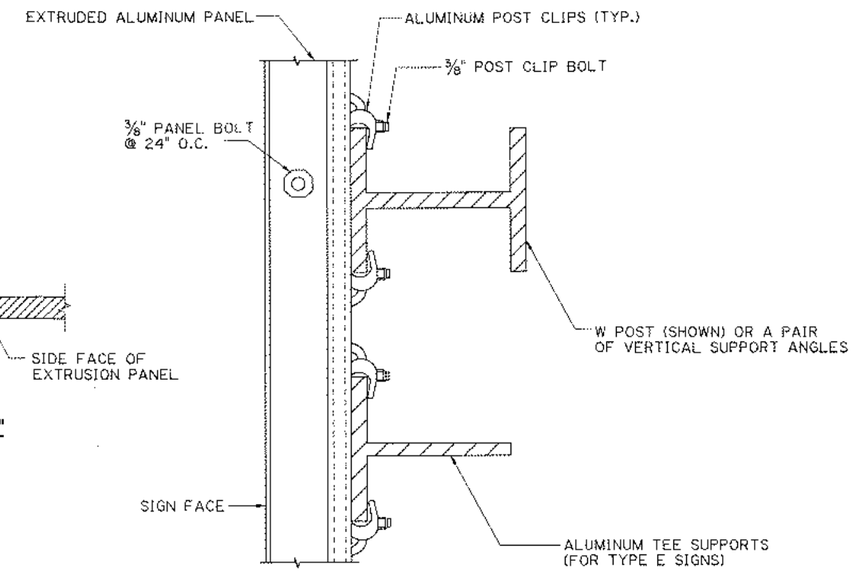

SECTION B-B

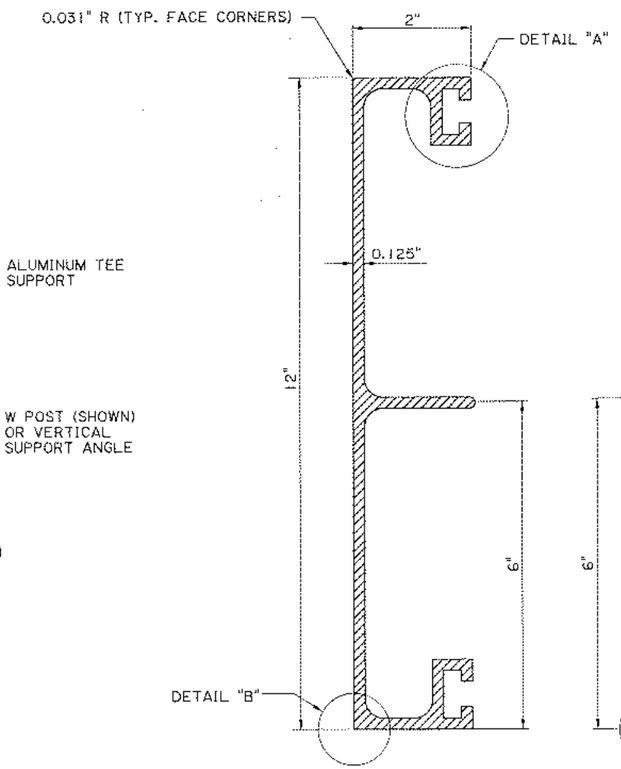

12" PANEL

MINIMUM WALL THICKNESS IS 0.080" UNLESS OTHERWISE SPECIFIED

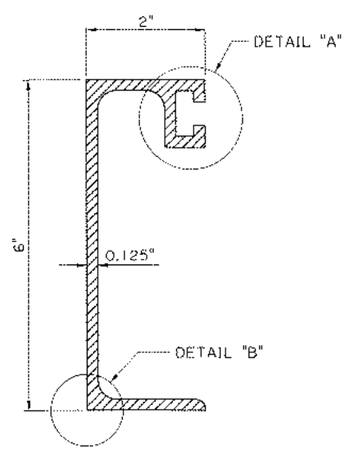

6" PANEL

MINIMUM WALL THICKNESS IS 0.080" UNLESS OTHERWISE SPECIFIED

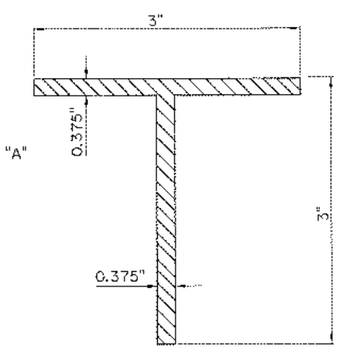

3"x3"x3/8"

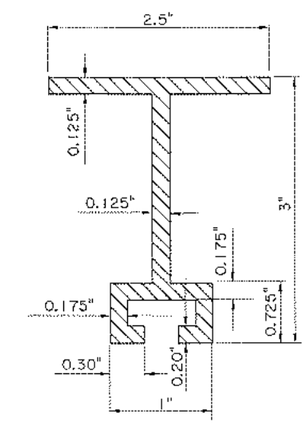

3"x2.5"

ALUMINUM TEE SUPPORTS

FOR TYPE E SIGNS

EXTRUDED ALUMINUM PANELS (TYPE D & E SIGNS)

ROADSIDE SIGNING STANDARDS

STATE OF LOUISIANA
KURT M. BRAUNER
License No. 32661
PROFESSIONAL ENGINEER
IN
CIVIL ENGINEERING
6/24/22

APPROVED BY CHIEF ENGINEER: 7/1/2022

DOTD
LOUISIANA DEPARTMENT OF TRANSPORTATION & DEVELOPMENT
BRIDGE AND STRUCTURAL DESIGN

DESIGN	K. BRAUNER	PARISH	
CHECK	C. GUIDRY	CONTROL SECTION	
DETAIL	K. BRAUNER	STATE PROJECT	
CHECK	C. GUIDRY		
REVIEW	C. BOURGEOIS		
SHEET #	6 OF 17		

IP_PW2:d0964073\Roadside Traffic Signs 06.dgn
6/24/2022 09:20

TYPE A SIGN

RECTANGULAR SHAPES:
4'-0" MAX. HORIZ. DIM.
DIAMOND SHAPES:
5'-0" MAX. EDGE DIM.
OTHER SHAPES:
5'-0" MAX. HORIZ. DIM.

TYPE B SIGN

CLUSTER ASSEMBLY
MAX. DIM. FOR DIFFERENT SIGN BLANK SHAPES ON SINGLE POST SIGNS.
DIAMOND: 5'-0"x5'-0"
TRIANGLE: 5'-0"x5'-0"x5'-0"
OTHERS: 5'-0" MAX. HORIZ. DIM.

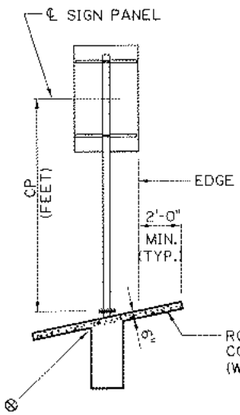

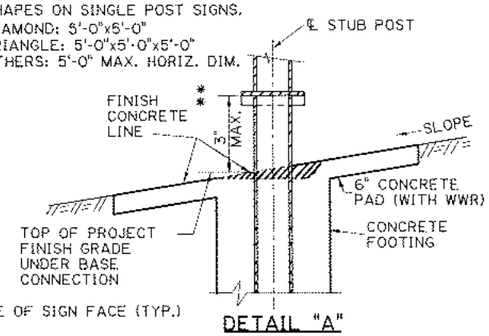

DETAIL "A"

** TO MAINTAIN CORRECT STUB PROJECTION, RECESS CONCRETE AS NECESSARY FOR BOLT INSTALLATION. RECESS SHAPE TO DRAIN. IF MAX. STUB PROJECTION IS EXCEEDED, THE CONTRACTOR SHALL REMOVE AND REINSTALL PAD AS DIRECTED BY THE PROJECT ENGINEER AT NO ADDITIONAL COST.

⊗ SLAB AND FOOTING SHALL BE POURED MONOLITHIC.

SINGLE POST MOUNTS																			
	TOTAL SQ. FT. SIGN AREA																		
	STEEL ALTERNATE																		
CP	ZONE I								ZONE II										
	5	10	15	20	25	30	35		5	10	15	20	25	30	35				
7	1	1	1	2	2	2	3		1	1	2	2	3	3	3				
8			2			2				1									
9						3				2									
10					2							2							
11		1			3							3							
12	1	2							1										
13	2			2					2						3				
14				3								2			4				
15				3								3			4				
16	2	2	2	3	3	3	3		2	2	3	3	3	3	4				

SINGLE POST PIPE & TUBE SECTIONS	
NO.	STEEL
1	2½" ø SCH. 40
2	3½" ø SCH. 40
3	5" ø SCH. 40
4	6" ø SCH. 40

NOTES:

W POST SECTIONS AND TABLE:
COLUMNS HEADED BY THE NUMBERS 27 AND 20 REPRESENT THE DESIGN WIND PRESSURE IN POUNDS PER SQUARE FOOT.
SEE ACCOMPANYING LOUISIANA WIND MAP TO DETERMINE THE DESIGN WIND PRESURE.
L - LENGTH OF SIGN PANEL DESIGNED.
H - HEIGHT OF SIGN PANEL DESIGNED.
ALL DIMENSIONS ARE IN INCREMENTS OF EVEN FEET.

THIS SHEET TO BE USED WITH WIND LOAD MAP AND GENERAL NOTE SHEET.

CONCRETE SLAB TO BE REINFORCED WITH A.S.T.M. A1064 WWR 4x4-W4.0 x W4.0 AND FINISHED IN ACCORDANCE WITH LA. STD. SPECS. 805.08.5.

✡ 30' MAX. (15' MIN.) FOR FREEWAYS AND EXPRESSWAYS. 15' FOR FRONTAGE ROADS. "BRIDGE ICES BEFORE ROAD" SIGNS, AND TYPE D RAMP SIGNS. SEE SIGN SUMMARY SHEETS. PROJECT ENGINEER MAY ADJUST ON A CASE-BY-CASE BASIS.

⊠ 7' MINIMUM FOR ROUTE MARKERS, WARNING AND REGULATORY SIGNS. 8' MINIMUM FOR GUIDE SIGNS WHEN SECONDARY SIGN MOUNTED BELOW.

⊙ MOUNTING HEIGHT SHALL BE 7'-0" MIN. UNLESS OTHERWISE NOTED ON THE SIGN SUMMARY SHEET. CHEVRON SIGNS (W1-8) MAY BE INSTALLED AT 4'-0" OR HIGHER.

W POST SECTIONS FOR DOUBLE & TRIPLE POST MOUNTINGS																			
PL.		STEEL		PL.		STEEL		PL.		STEEL		PL.		STEEL		PL.		STEEL	
L	H	27	20	L	H	27	20	L	H	27	20	L	H	27	20	L	H	27	20
5	1	1	1	12	5	2	1	16	5	4	4	21	6	3	3
5	2	1	1	12	6	2	2	16	6	4	4	21	9	4	3
5	3	1	1	12	7	2	2	17	4	2	2	21	10	4	3
5	4	1	1	12	8	2	2	17	5	2	2	21	11	4	4
5	5	1	1	12	9	2	2	17	6	2	2	21	12	4	4
5	6	1	1	12	10	2	2	17	7	3	2	21	13	4	3
6	1	1	1	12	11	3	2	17	8	3	2	21	14	4	3
6	2	1	1	12	12	3	2	17	9	3	3	21	15	4	4
6	3	1	1	12	13	3	3	17	10	3	3	21	16	4	4
6	4	1	1	13	3	1	1	17	11	4	3	22	4	2	2
6	5	1	1	13	4	1	1	17	12	4	3	22	5	2	2
6	6	1	1	13	5	2	1	17	13	3	3	22	6	3	2
6	7	1	1	13	6	2	2	17	14	3	3	22	7	3	3
7	2	1	1	13	7	2	2	17	15	4	3	22	8	3	3
7	3	1	1	13	8	2	2	17	16	4	3	22	9	4	3
7	4	1	1	13	9	2	2	18	3	2	1	22	10	4	3
7	5	1	1	13	10	3	2	18	4	2	2	22	11	4	4
7	6	1	1	13	11	3	2	18	5	2	2	22	12	4	4
7	7	1	1	13	12	3	3	18	6	2	2	22	13	4	3
7	8	1	1	13	13	3	3	18	7	3	2	22	14	4	4
8	2	1	1	13	14	4	3	18	8	3	2	22	15	4	4
8	3	1	1	14	3	1	1	18	9	3	3	22	16	4	4
8	4	1	1	14	4	2	1	18	10	3	3	23	4	2	2
8	5	1	1	14	5	2	2	18	11	4	3	23	5	3	2
8	6	1	1	14	6	2	2	18	12	4	3	23	6	3	3
8	7	1	1	14	7	2	2	18	13	3	3	23	7	3	3
8	8	2	1	14	8	2	2	18	14	4	3	23	8	4	3
8	9	2	1	14	9	3	2	18	15	4	3	23	9	4	3
9	2	1	1	14	10	3	2	18	16	4	3	23	10	4	4
9	3	1	1	14	11	3	3	19	3	2	1	23	11	4	4
9	4	1	1	14	12	3	3	19	4	2	2	23	12	4	4
9	5	1	1	14	13	4	3	19	5	2	2	23	13	4	4
9	6	1	1	14	14	4	3	19	6	2	2	23	14	4	4
9	7	2	1	14	15	4	3	19	7	3	2	23	15	4	4
9	8	2	1	15	3	1	1	19	8	3	3	23	16	4	4
9	9	2	2	15	4	2	1	19	9	3	3	24	4	2	2
9	10	2	2	15	5	2	2	19	10	4	3	24	5	3	2
10	2	1	1	15	6	2	2	19	11	4	3	24	6	3	3
10	3	1	1	15	7	2	2	19	12	4	4	24	7	3	3
10	4	1	1	15	8	3	2	19	13	4	3	24	8	4	3
10	5	1	1	15	9	3	2	19	14	4	3	24	9	4	3
10	6	2	1	15	10	3	3	19	15	4	3	24	10	4	4
10	7	2	1	15	11	3	3	19	16	4	4	24	11	4	4
10	8	2	2	15	12	3	3	20	4	2	2	24	12	4	4
10	9	2	2	15	13	4	3	20	5	2	2	24	13	4	4
10	10	2	2	15	14	4	3	20	6	3	2	24	14	4	4
10	11	2	2	15	15	4	4	20	7	3	2	24	15	4	4
11	2	1	1	15	16	4	4	20	8	3	3	24	16	5	4
11	3	1	1	16	3	1	1	20	9	3	3	25	5	3	2
11	4	1	1	16	4	2	1	20	10	4	3	25	6	3	3
11	5	1	1	16	5	2	2	20	11	4	3	25	7	4	3
11	6	2	1	16	6	2	2	20	12	4	4	25	8	4	3
11	7	2	2	16	7	2	2	20	13	4	3	25	9	4	4
11	8	2	2	16	8	3	2	20	14	4	3	25	10	4	4
11	9	2	2	16	9	3	2	20	15	4	4	25	11	4	4
11	10	2	2	16	10	3	3	20	16	4	4	25	12	5	4
11	11	3	2	16	11	3	3	21	4	2	2	25	13	4	4
11	12	3	2	16	12	4	3	21	5	2	2	25	14	4	4
12	3	1	1	16	13	4	3	21	6	3	2	25	15	4	4
12	4	1	1	16	14	4	3	21	7	3	3	25	16	5	4

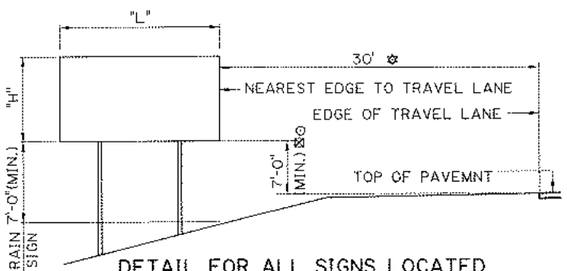

DETAIL FOR ALL SIGNS LOCATED ON FORE SLOPE (TWO SUPPORTS SHOWN)

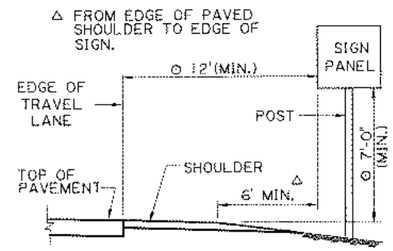

ROADSIDE SIGN
RURAL INTERSECTIONS

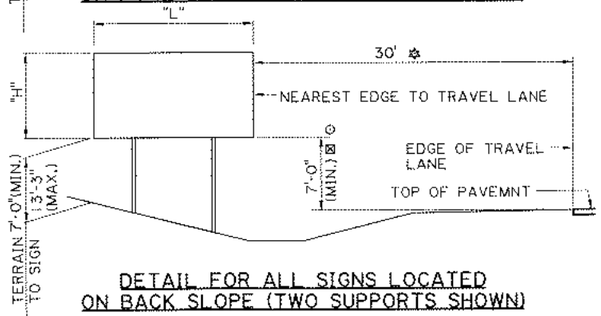

DETAIL FOR ALL SIGNS LOCATED ON BACK SLOPE (TWO SUPPORTS SHOWN)

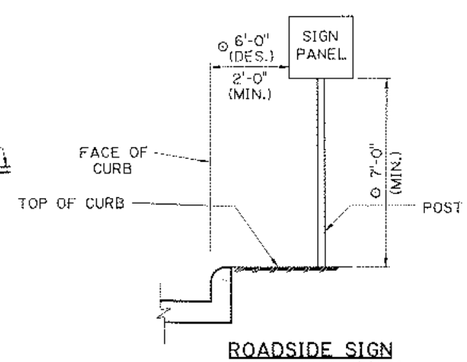

ROADSIDE SIGN
URBAN INTERSECTIONS

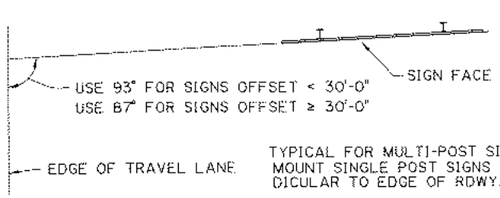

TYPICAL FOR MULTI-POST SIGNS. MOUNT SINGLE POST SIGNS PERPENDICULAR TO EDGE OF RDWY.

LOCATION OF ALL GROUND MOUNTED SIGN STRUCTURES (TWO SUPPORTS SHOWN)

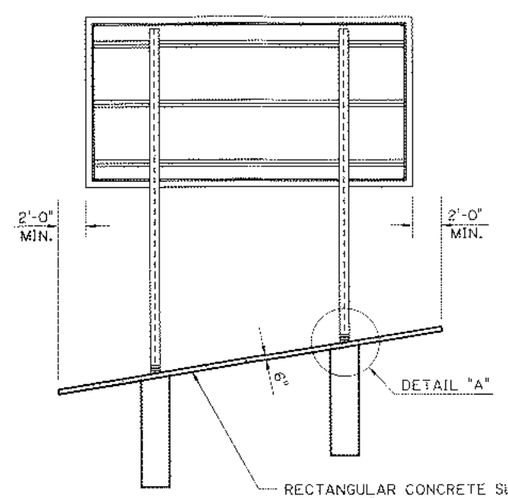

REAR ELEVATION OF MULTI - POST MOUNTING

W SECTIONS	
NO.	STEEL
1	W6x12
2	W8x18
3	W8x24
4	W10x33
5	W12x40
6	W12x45

SHEET NUMBER 224

PARISH | CONTROL SECTION | STATE PROJECT

DESIGN K. BRAUNER | CHECK C. GUIDRY | DETAIL K. BRAUNER | CHECK C. GUIDRY | REVIEW C. BOURGEOIS | SHEETS 7 OF 17

STATE OF LOUISIANA
KURT M. BRAUNER
License No. 30067
PROFESSIONAL ENGINEER
IN
CIVIL ENGINEERING
6/24/22

APPROVED BY CHIEF ENGINEER: DATE: 7/1/2022

ROADSIDE MOUNTED SIGNS (TYPE A, B, & D SIGNS)

ROADSIDE SIGNING STANDARDS

STANDARD L.A.N.

DOTD
LOUISIANA DEPARTMENT OF TRANSPORTATION & DEVELOPMENT
BRIDGE AND STRUCTURAL DESIGN

6/24/2022 09:21

IP PWP:d0964073\Roadside Traffic Signs 07.dgn

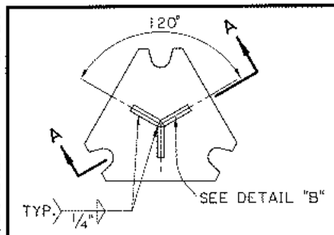

TOP VIEW STUB POST

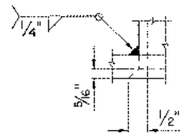

DETAIL "A"

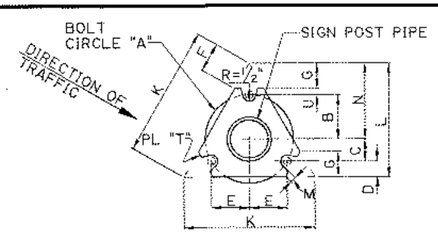

PLAN OF BASE

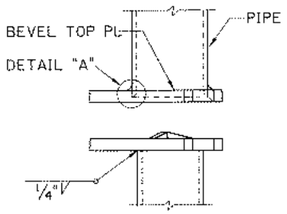

SECTION A-A

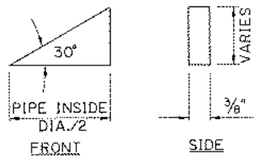

DETAIL "B"
3 REQ'D.

MULTI-DIRECTIONAL BASE
SINGLE STEEL POST ONLY

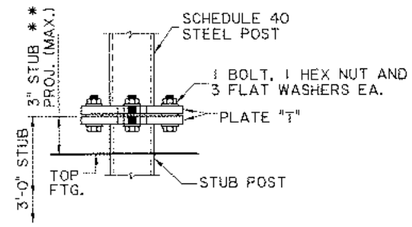

ELEVATION OF BASE CONNECTION
STEEL

** IF MAX. STUB PROJECTION IS EXCEEDED, CONTRACTOR SHALL REMOVE AND REINSTALL PAD AS DIRECTED BY THE PROJECT ENGINEER AT NO COST TO THE DEPARTMENT.

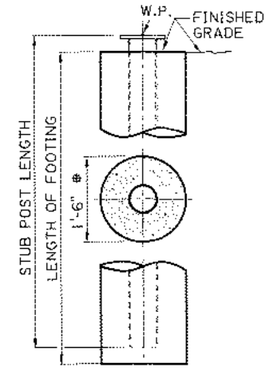

⊕ FOR 2 1/2"Φ (STEEL) POST SECTIONS, FOOTING DIAMETER SHALL BE 1'-0"

FOOTING DETAIL
PIPE SECTIONS

PROCEDURE FOR ASSEMBLY OF BASE CONNECTION:

SPECIAL CARE SHALL BE TAKEN TO SET THE BASE PLUM TO AVOID EXCESSIVE SHIMMING AT THE BREAK-AWAY FEATURE AFTER FINAL INSTALLATION. EXCESSIVE SHIMMING COULD IMPAIR THE BREAK-AWAY FEATURE FOR WHICH THIS INSTALLATION WAS DESIGNED.

1. BASE SHALL BE ALIGNED AND SET PLUM BEFORE OR IMMEDIATELY AFTER POURING CONCRETE FOOTING.
2. H.S. BOLTS IN BASE PLATE SHALL BE TIGHTENED TO THE PRESCRIBED TORQUE. CARE SHALL BE TAKEN TO AVOID OVERTIGHTING.

FRICTION CAPS:

CAPS MAY BE MANUFACTURED FROM EITHER HOT ROLLED OR COLD ROLLED STEEL SHEETS. FOR PIPE SIZES 3 1/2" AND SMALLER THE MINIMUM SHEET METAL THICKNESS SHALL BE 24 GAUGE. THE RIM EDGES SHALL BE REASONABLY STRAIGHT AND SMOOTH. CAPS SHALL BE SIZED AND FORMED IN SUCH A MANNER AS TO PRODUCE A DRIVE-ON FRICTION FIT AND HAVE NO TENDENCY TO ROCK WHEN SEATED ON THE PIPE. THE DEPTH SHALL BE SUFFICIENT TO GIVE POSITIVE PROTECTION AGAINST ENTRANCE OF RAINWATER. THEY SHALL BE FREE OF SHARP CREASES OR INDENTATIONS AND SHOW NO EVIDENCE OF METAL FRACTURE. CAPS SHALL HAVE A ELECTRODEPOSITED COATING OF ZINC IN ACCORDANCE WITH THE REQUIREMENTS OF A.S.T.M. SPECIFICATION B633 SC4, TYPE 1.

THIS SHEET TO BE USED WITH WIND LOAD MAP AND GENERAL NOTE SHEET.

STEEL MULTI-DIRECTIONAL BASE CONNECTION DATA

NOMINAL PIPE SIZE	BOLT SIZE ⊙ & TORQUE	WELD SIZE	T	Y	A	B	C	D	E	F	G	K	L	M	N	U
2 1/2" OR 3 1/2" DIA.	5/8" T=226	3/8"	5/8"	7"	7"	3 1/2"	1 3/4"	1 1/4"	3"	2 5/16"	2"	10 3/8"	9"	1/2"	6"	1/2"

FOR STUB POST LENGTH & FOOTING DIMENSION SEE TABLE BELOW AND FOOTING DETAIL.
⊙ TORQUE IN INCH-LBS., BOLTS ARE HIGH STRENGTH

FOOTING DATA

POST DIA.	STUB L	FOOTING L	CU.YD. CONC.
2 1/2"	36"	36"	0.09
3 1/2"	36"	36"	0.20
5"	48"	48"	0.26

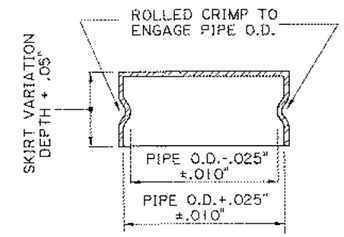

FRICTION CAP DETAIL
USED AT TOP OF ALL POSTS

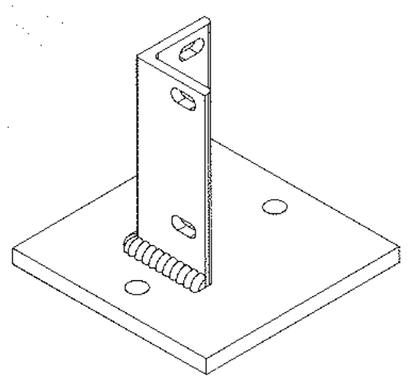

SURFACE MOUNT FOR MILE MARKERS
(SQUARE TUBE ONLY)

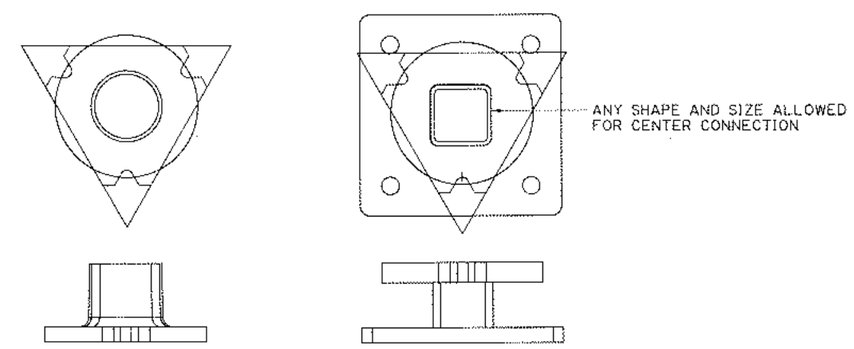

TYPICAL TOP ASSEMBLY TYPICAL BOTTOM ASSEMBLY

CONCRETE SURFACE MOUNT

SHEET NUMBER 225

DESIGN K. BRAUNER
CHECK C. GUIDRY
DETAIL K. BRAUNER
CHECK C. GUIDRY
REVIEW C. BOURGEOIS
SERIES 1 OF 17

STATE OF LOUISIANA
KURT W. BRAUNER
License No. 30567
PROFESSIONAL ENGINEER
IN
CIVIL ENGINEERING
6/24/22

APPROVED BY CHIEF ENGINEER:
DATE: 7/1/2022

ROADSIDE MOUNTED SIGN DETAILS
(TYPE A & B SIGNS)

ROADSIDE SIGNING STANDARDS

DOTD
LOUISIANA DEPARTMENT OF TRANSPORTATION & DEVELOPMENT
BRIDGE AND STRUCTURAL DESIGN

09:24
6/24/2022
IP_PWP:d0964073\Roadside Traffic Signs 08.dgn

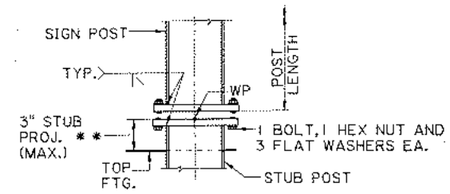

ELEVATION OF HORIZONTAL CONNECTION W SECTION

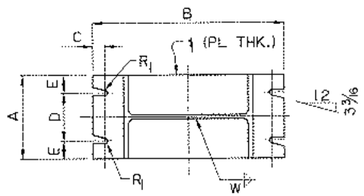

PLAN BASE PLATE AND POST

ADD 1/2" FOR BEVELED BASE PLATES

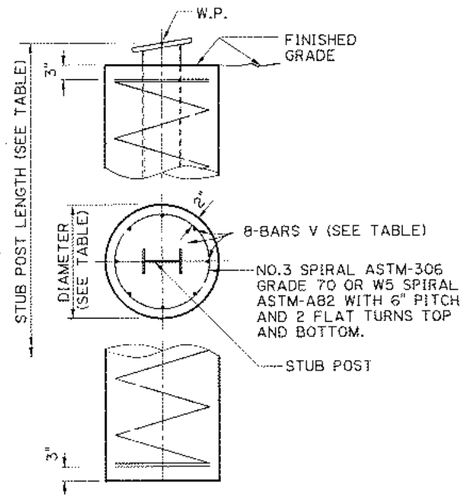

CONCRETE FOOTING DETAIL W SECTION

NOTE:
NO REINFORCING STEEL IS REQUIRED FOR 'S' SECTION.

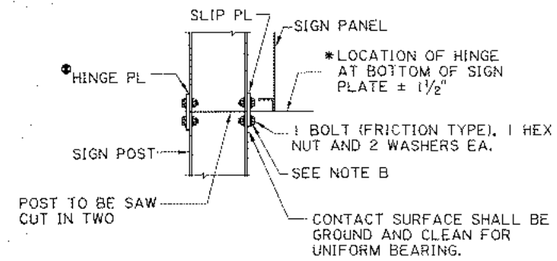

SLIP PLATE CONNECTION DETAIL

● WHEN SIGN IS LOCATED ON SIDE OF ROADWAY WITH TWO WAY TRAFFIC, A SLIP PLATE WILL BE USED ON BOTH SIDES OF THE POST IN LIEU OF THE HINGE PLATE SHOWN

* FOR EXTRUSION SIGN PANEL ALTERNATE, LOCATION OF ℄ HINGE SHALL BE 3 1/2" FROM BOTTOM OF SIGN PANEL.

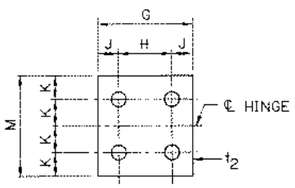

HINGE PLATE DETAIL

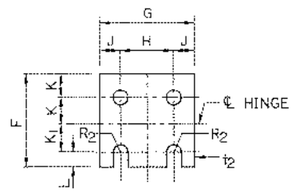

SLIP PLATE DETAIL

BOLT HOLE DIAMETERS TO BE EQUAL TO BOLT DIA. + 1/16" IN POST FLANGE AND SLIP PLATE.

SLIP PLATE CONNECTION NOTES:

1. POST SHALL BE SAW CUT OR TORCH CUT PRIOR TO GALVANIZING.
2. SLIP PLATE SHALL BE INSTALLED WITH H.S. BOLTS AT MINIMUM BOLT TENSION.
3. TIGHTING SHALL BE OBTAINED BY
   (a) TURN OF NUT METHOD; OR
   (b) DIRECT TENSION INDICATOR METHOD USING LOAD INDICATOR WASHER. SEE NOTE A.
4. TIGHTING SHALL BE TO SUCH A DEGREE AS TO OBTAIN MINIMUM BOLT TENSION AS SPECIFIED IN STANDARD SPECIFICATIONS SUBSECTION 807.05, CURRENT AT TIME OF FABRICATION.
5. TIGHTEN BOLTS IN A SYSTEMATIC ORDER TO THE PRESCRIBED MINIMUM BOLT TENSION.

NOTE A:

WHEN HIGH STRENGTH BOLT IS TIGHTENED BY USE OF A DIRECT TENSION INDICATOR, THE INSTALLATION AND INSPECTION SHALL BE IN ACCORDANCE WITH SPECIFICATION FOR STRUCTURAL JOINTS, SECTION 5 AND 6 FOR ASTM A-325 BOLTS APPROVED BY THE RESEARCH COUNCIL ON RIVETED AND BOLTED STRUCTURAL JOINTS. FOR DETAILED INSTALLATION AND INSPECTION PROCEDURES FOLLOWED MANUFACTURER'S RECOMMENDATIONS. CONTRACTOR SHALL BE REQUIRED TO SUBMIT BROCHURES TO THE BRIDGE DESIGN ENGINEER FOR APPROVAL.

NOTE B:

WHEN HIGH STRENGTH BOLT IS TIGHTENED BY USE OF A DIRECT TENSION INDICATOR METHOD, THE WASHER UNDER THE BOLT HEAD SHALL BE A LOAD INDICATOR WASHER.

PROCEDURE FOR ASSEMBLY OF BASE CONNECTION:

SPECIAL CARE SHALL BE TAKEN TO SET THE BASE PLUMB TO AVOID EXCESSIVE SHIMMING AT THE BREAK-AWAY FEATURE AFTER FINAL INSTALLATION. EXCESSIVE SHIMMING COULD IMPAIR THE BREAK-AWAY FEATURE FOR WHICH THIS INSTALLATION WAS DESIGNED. SHIM PACKS SHOWN ON THIS DRAWING SHOULD BE SUFFICIENT TO ALLOW FOR NORMAL MISALIGNMENT.

1. BASE SHALL BE ALIGNED AND SET PLUMB BEFORE OR IMMEDIATELY AFTER POURING CONCRETE FOOTING.
2. H.S. BOLTS IN BASE PLATE SHALL BE TIGHTENED TO THE PRESCRIBED TORQUE. CARE SHALL BE TAKEN TO AVOID OVERTIGHTING.

DIRECTION OF HIGHEST SPEED TRAFFIC

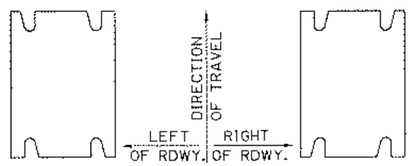

LEFT HAND SLOTS RIGHT HAND SLOTS

FOR ONE-WAY TRAFFIC LANES. FOR TWO-WAY TRAFFIC LANES, USE RIGHT HAND SLOTS ONLY.

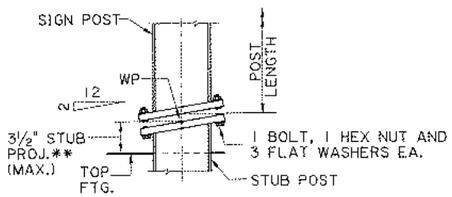

ELEVATION OF BEVELED CONNECTION W SECTION

TO BE USED ON ALL MULTI-POST SIGNS WITH DISTANCE BETWEEN POSTS 7'-0" ℄ TO ℄ OR LESS.

** IF MAX. STUB PROJECTION IS EXCEEDED, CONTRACTOR SHALL REMOVE AND REINSTALL PAD AS DIRECTED BY THE PROJECT ENGINEER AT NO COST TO THE DEPARTMENT.

TWO-WAY SLOTS
FOR GORE INSTALLATIONS

HOLES
FOR BRIDGE MOUNTED SIGNS & SIGNS BEHIND GUARDRAIL

ORIENTATION AND USE OF SLOTS AND HOLES

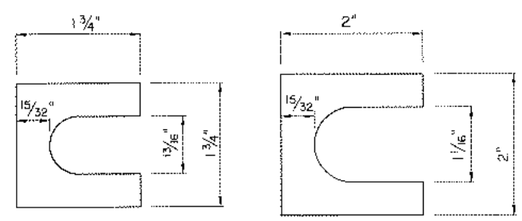

* SHIM DETAIL
BOLTS UP TO 3/4" ø BOLTS

* SHIM DETAIL
BOLTS UP TO 1" ø BOLTS

* FURNISH 2 SHIMS 0.012"± THICK AND 2 SHIMS 0.032"± THICK PER POST. SHIMS SHALL BE BRASS CONFORMING TO A.S.T.M. SPEC. B-36 AND BE USED AS DIRECTED BY THE PROJECT ENGINEER.

SECTION \ DIMENSION (INCH)	BASE CONNECTION DATA										SLIP PLATE & HINGE PLATE DATA											FOOTING DATA				
	BOLT SIZE & * TORQUE LIMITS	A	B	C	D	E	t_1	R	W	W (ALT.) SEE NOTE	F	G	H	J	K	K_1	L	M	t_2	R_2	H.S. BOLT DIA.	STUB LTH.	FTG. DIA.	LTH. OF FTG.	BARS V SIZE	CU. YD. CONC.
W6x12	5/8"ø T= 226-345	4	10	3/4	2	1	1 1/2	11/32	5/16	5/16	3 5/8	4	2 1/4	7/8	1	1 1/4	5/8	4 1/4	3/8	9/32	1/2	24	24	48	#5	0.46
W8x18		5 1/4	12	3/4	3	1 1/8	1 1/2	11/32	5/16	5/16	4 1/8	5 1/4	2 3/4	1 1/4	1 1/8	1 3/8	3/4	4 3/4	1/2	11/32	5/8	24	24	60	#6	0.58
W8x24	3/4"ø T= 369-554	6 1/2	12 1/2	7/8	3 1/4	1 5/8	1 3/4	13/32	3/8	7/16	4 1/8	6 1/2	3 1/2	1 1/2	1 1/8	1 3/8	3/4	4 3/4	1/2	11/32	5/8	30	24	72	#7	0.70
W10x33	1"ø T= 460-735	8	15 1/2	1 1/4	4 1/2	1 3/4	2	17/32	3/8	7/16	4 5/8	8	5 1/2	1 1/4	1 1/4	1 1/2	7/8	5 1/4	5/8	13/32	3/4	30	24	96	#9	0.93
W12x40		8	17 1/2	1 1/4	4 1/2	1 3/4	2	17/32	3/8	7/16	4 5/8	8	5 1/2	1 1/4	1 1/4	1 1/2	7/8	5 1/4	5/8	13/32	3/4	36	24	120	#10	1.16
W12x45		10	17 1/2	1 1/4	6	2	2	17/32	3/8	7/16	5 1/2	10	5 1/2	2 1/4	1 1/2	1 3/4	1	6 1/4	3/4	15/32	7/8	36	36	96	#9	2.09

* BASE PLATE TO POST WELD ALTERNATE (AS AN ALTERNATE TO WELDS SHOWN IN DETAILS, THE POST MEMBERS TABULATED MAY BE WELDED ALL AROUND WITH A FILLET WELD W(ALT.).) ALL BOLTS SHALL HAVE A MINIMUM OF 3 THREADS BEYOND THE NUT. BOLT TORQUE LIMITS ARE IN INCH POUNDS. (THE HIGH STRENGTH BOLTS AT THE BASE CONNECTION SHOULD BE TORQUED WITHIN THE LIMITS SPECIFIED, HOWEVER, THE LOWER LIMIT IS DESIRABLE). FOR NON-BREAKAWAY USE TORQUE LIMITS GIVEN IN THE STANDARD SPECIFICATIONS

SHEET NUMBER 226

PARISH | CONTROL SECTION | STATE PROJECT

DESIGN K. BRAUNER | CHECK C. GUIDRY | DETAIL K. BRAUNER | CHECK C. GUIDRY | REVIEW C. BOURGEOIS | SERIES 9 OF 17

STATE OF LOUISIANA
KURT M. BRAUNER
License No. 30667
PROFESSIONAL ENGINEER
IN
CIVIL ENGINEERING
6/24/22

APPROVED BY STATE ENGINEER | DATE 7/1/2022

STATE OF LOUISIANA

ROADSIDE MOUNTED SIGN DETAILS (TYPE D SIGNS)

ROADSIDE SIGNING STANDARDS

STANDARD PLAN

DOTD
LOUISIANA DEPARTMENT OF TRANSPORTATION & DEVELOPMENT

BRIDGE AND STRUCTURAL DESIGN

IP PWF:d0964073\Roadside Traffic Signs 09.dgn 6/24/2022 09:31

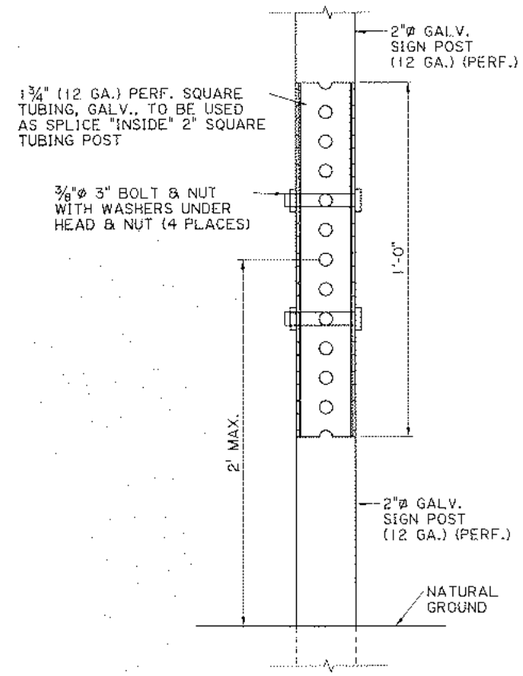

SPLICE JOINT
FOR SIGN 2" POST

SIGN CENTROID (CP)	ALLOWABLE SIGN AREA (FT²)			
	70 MPH + 30% GUST		80 MPH + 30% GUST	
	SINGLE POST (2" x 12GA PERF.)	DOUBLE POST (2" x 12GA PERF.)	SINGLE POST (2" x 12GA PERF.)	DOUBLE POST (2" x 12GA PERF.)
14'	3.99	7.98	2.99	5.97
13.5'	4.14	8.28	3.10	6.19
13'	4.30	8.59	3.21	6.43
12.5'	4.47	8.93	3.34	6.68
12'	4.65	9.30	3.48	6.96
11.5'	4.85	9.70	3.63	7.26
11'	5.07	10.14	3.79	7.59
10.5'	5.31	10.62	3.97	7.95
10'	5.57	11.15	4.17	8.34
9.5'	5.86	11.73	4.39	8.77
9'	6.19	12.37	4.63	9.26
8.5'	6.55	13.09	4.90	9.79
8'	6.95	13.90	5.20	10.40
7.5'	7.41	14.81	5.54	11.08
7'	7.93	15.86	5.93	11.86

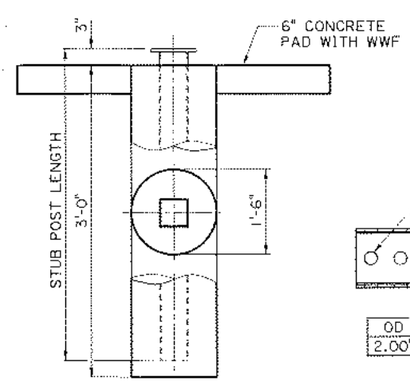

FOOTING DETAIL
SQ. TUBE SECTIONS

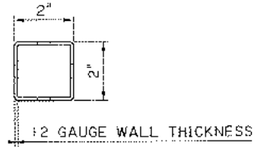

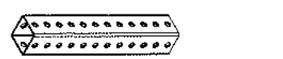

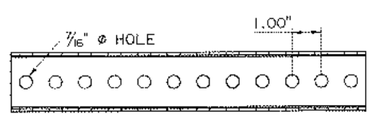

OD	GAUGE	WALL	WEIGHT PER FOOT
2.00"	12GA	0.105"	2.459#

2" SQUARE TUBING

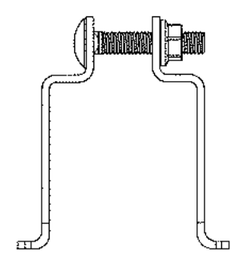

SIGN CLAMP FOR SQUARE POSTS

⅞" WIDE X 11GA. TYPE 304, #2B FINISHED STAINLESS STEEL INCLUDES ⅜" - 16 X 2" CARRIAGE BOLT AND CASE HARDENED FLANGE NUT.

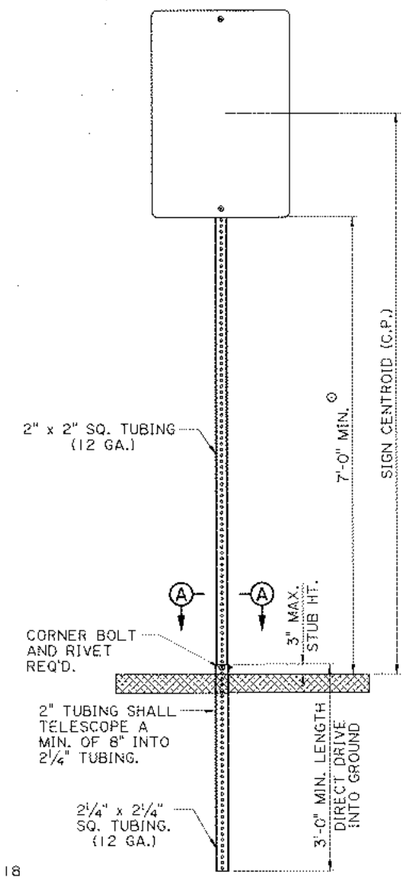

HARD SOIL LOCATIONS

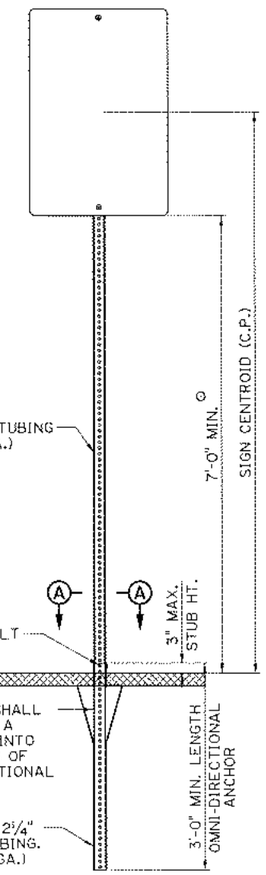

SOFT SOIL LOCATIONS

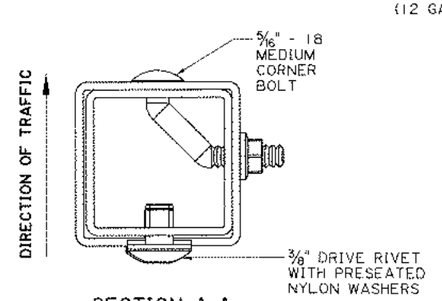

SECTION A-A

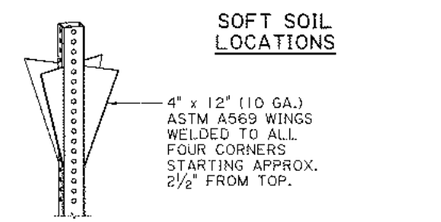

OMNI-DIRECTIONAL ANCHOR

NOTES:

SEE SECTION 1015.02 IN THE STANDARD SPECIFICATIONS FOR INFORMATION RELATED TO THE ALLOWABLE MATERIALS.

SIGNS MOUNTED TO SINGLE SQUARE TUBE POSTS DO NOT REQUIRE STIFFENERS UNLESS THE SIGN HAS AT LEAST ONE SIDE GREATER THAN 36" LONG.

FOR DUAL POSTS, LOCATE POSTS AT 58% SPACING FROM CENTER OF SIGN, OR 21% FROM EACH EDGE OF SIGN. USE STIFFENERS ON BACK OF SIGNS MOUNTED ON DUAL POSTS.

SIGNS MAY BE MOUNTED BACK TO BACK ON THE POST.

⊙ MOUNTING HEIGHT SHALL BE 7'-0" MIN. UNLESS OTHERWISE NOTED ON THE SIGN SUMMARY SHEET. CHEVRON SIGNS (W1-8) MAY BE INSTALLED AT 4'-0" OR HIGHER.

PARISH | CONTROL SECTION | STATE PROJECT

DESIGN K. BRAUNER | CHECK C. GUIDRY | DETAIL K. BRAUNER | CHECK C. GUIDRY | REVIEW C. BOURGEOIS | SHEET 10 OF 17

STATE OF LOUISIANA
KURT M. BRAUNER
License No. 30061
PROFESSIONAL ENGINEER
IN
CIVIL ENGINEERING
6/24/22

APPROVED BY DIRECT ENGINEERS
DATE 7/1/2022

STATE OF LOUISIANA

SQUARE TUBE SIGN DETAILS

ROADSIDE SIGNING STANDARDS

STANDARD PLAN

DOTD
LOUISIANA DEPARTMENT OF TRANSPORTATION & DEVELOPMENT
BRIDGE AND STRUCTURAL DESIGN

TP_PWP:d0964073\Roadside Traffic Signs 10.dgn

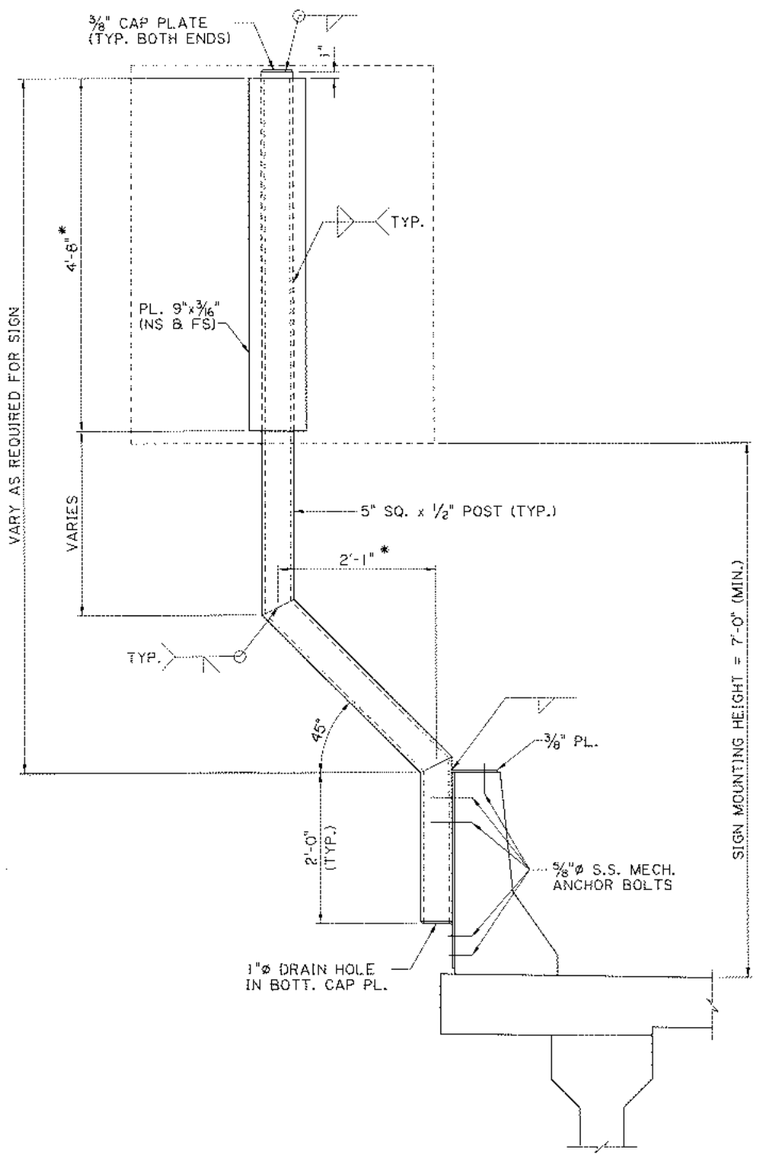

OFFSET SIGN SUPPORT

* DIMENSIONS ARE BASED ON A 5 FT. x 4 FT. SIGN. ADJUST AS NEEDED FOR DIFFERENT SIGN SIZES.

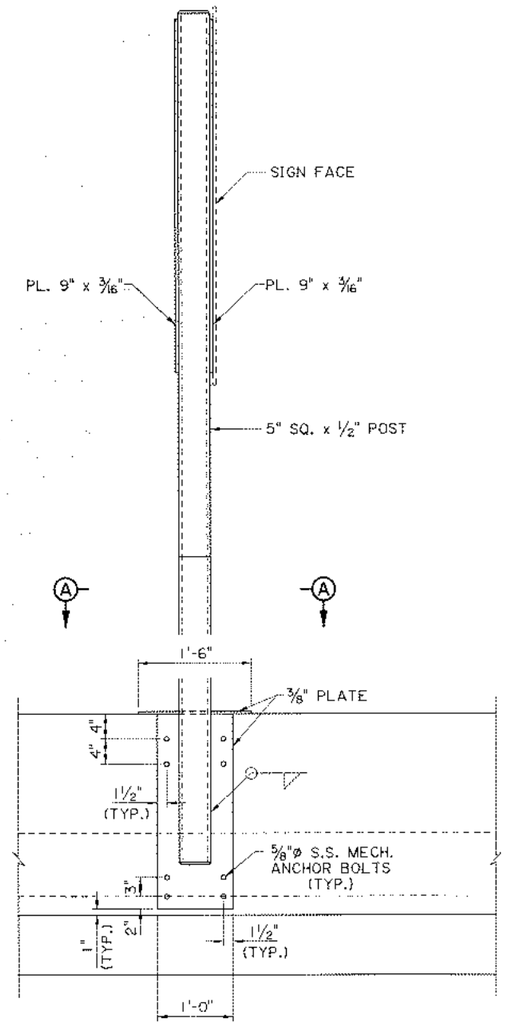

OUTSIDE ELEVATION SHOWING BARRIER

(TYPICAL INSTALLATION)

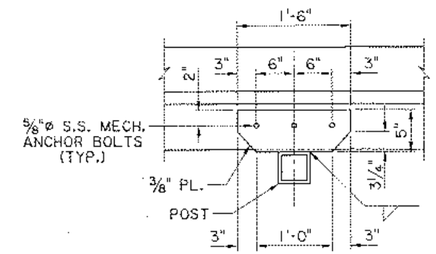

SECTION A-A

NOTES:

STRUCTURAL MEMBERS SHALL BE AASHTO M270 GRADE 50 STEEL AND SHALL BE HOT DIPPED GALVANIZED PER ASTM A-123.

MECHANICAL ANCHOR BOLTS SHALL BE 5/8"ø STAINLESS STEEL (MIN. FY = 55 ksi) AND SHALL BE SELECTED FROM THE A.M.L. AND INSTALLED AS PER THE MANUFACTURER'S RECOMMENDATIONS. EACH ANCHOR SHALL HAVE AN ALLOWABLE CAPACITY OF 3 KIPS PULLOUT AND 3 KIPS SHEAR AFTER APPLICATION OF ANY REDUCTION FACTORS FOR ANCHOR SPACING AND EDGE DISTANCE.

WELDING SHALL BE IN ACCORDANCE WITH THE BRIDGE WELDING CODE OF THE AMERICAN WELDING SOCIETY (AWS D1.5-10), AND SECTION 809 OF THE LOUISIANA STANDARD SPECIFICATIONS FOR ROADS AND BRIDGES, 2016 EDITION.

NO PART OF ANY SIGN SHALL PROTRUDE INTO THE SHOULDER AREA. DIMENSIONS OF SUPPORT POST AND BRACKET SHALL BE ADJUSTED AS NEEDED PRIOR TO FABRICATION.

ANY PORTIONS OF THE EXISTING BARRIER THAT ARE DAMAGED SHALL BE REPAIRED TO THE SATISFACTION OF THE PROJECT ENGINEER.

DIMENSIONS RELATED TO THE BARRIER CONNECTION ARE BASED ON AS-BUILT DRAWINGS AND PREVIOUS STANDARDS. DIMENSIONS SHALL BE ADJUSTED AS NEEDED BASED ON FIELD MEASUREMENTS.

A 1/8" NEOPRENE PAD SHALL BE USED BETWEEN ALL STEEL AND CONCRETE CONTACT SURFACES.

MAX SIGN AREA = 20 SQFT.

SHEET NUMBER 228

PARISH | CONTROL SECTION | STATE PROJECT

DESIGN K. BRAUNER
CHECK Y. TOURRES
DETAIL K. BRAUNER
CHECK Y. TOURRES
REVIEW C. GUIDRY
ISSUED 11 OF 17

STATE OF LOUISIANA
KURT M. BRAUNER
LICENSE NO. 30967
PROFESSIONAL ENGINEER
IN
CIVIL ENGINEERING
6/24/22

APPROVED BY CHIEF ENGINEER
DATE 7/1/2022

STATE OF LOUISIANA

Z - BRACKET SIGN SUPPORT
(F - SHAPE BARRIER)

STANDARD PLAN
ROADSIDE SIGNING STANDARDS

DOTD
LOUISIANA DEPARTMENT OF TRANSPORTATION & DEVELOPMENT
BRIDGE AND STRUCTURAL DESIGN

6/24/2022 09:33
IP_PWP:d0964073\Roadside Traffic Signs 11.dgn

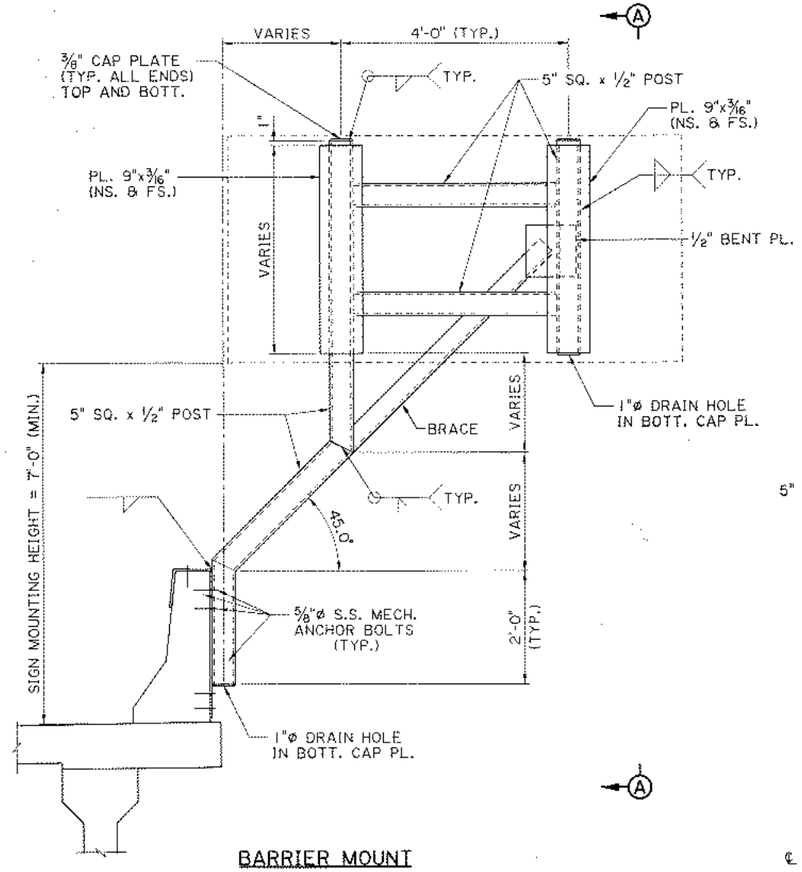

BARRIER MOUNT

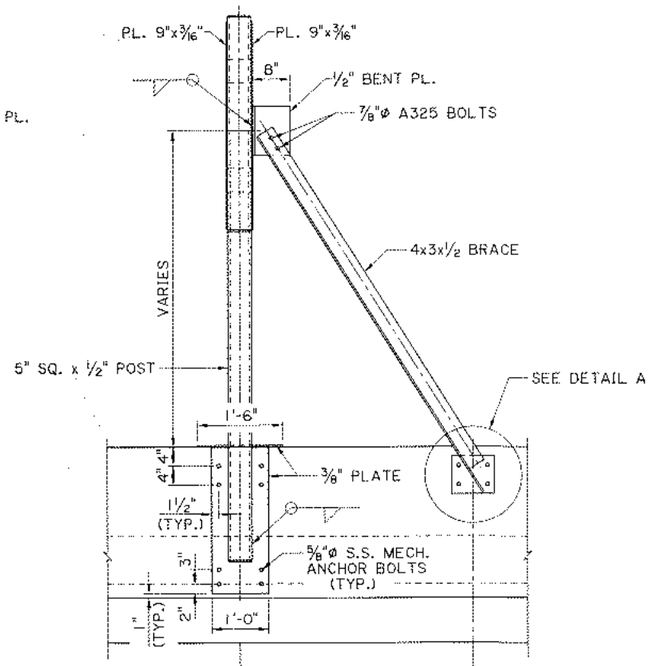

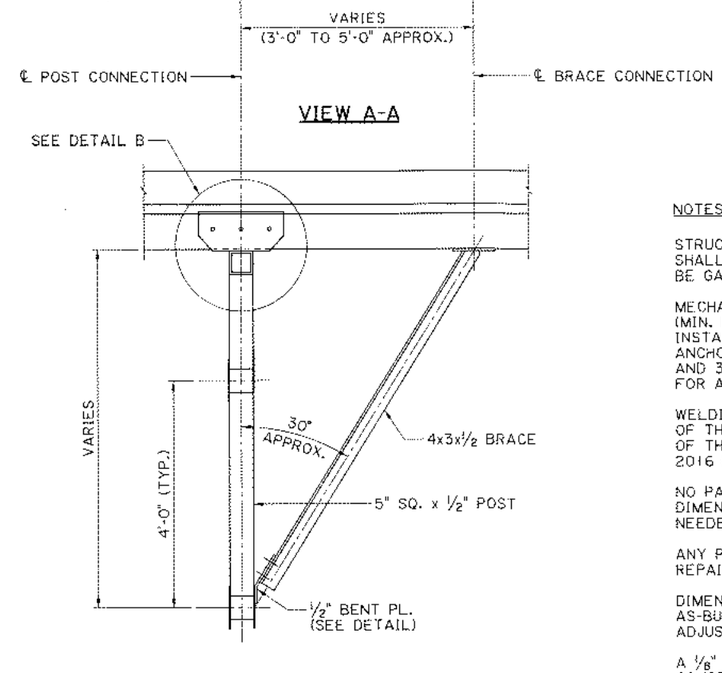

VIEW A-A

TOP VIEW

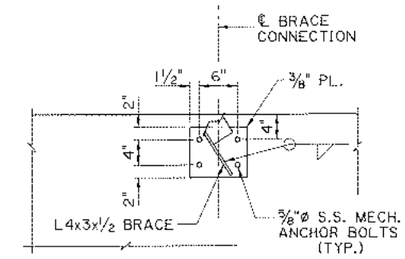

DETAIL A

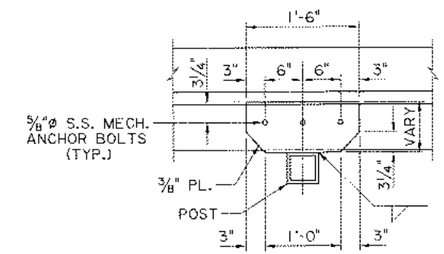

DETAIL B

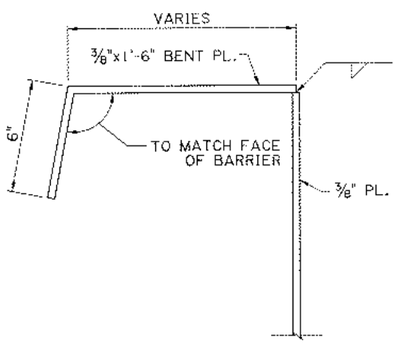

BARRIER CONNECTION DETAIL

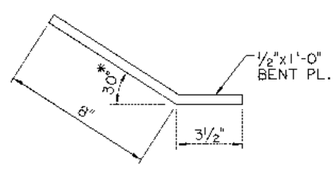

1/2" BENT PLATE DETAIL

* ANGLE IS APPROXIMATE. VARY AS NEEDED.

NOTES:

STRUCTURAL MEMBERS SHALL BE AASHTO M270 GRADE 50 STEEL AND SHALL BE HOT DIPPED GALVANIZED PER ASTM A-123. A325 BOLTS TO BE GALVANIZED PER ASTM A-153.

MECHANICAL ANCHOR BOLTS SHALL BE 5/8"ø STAINLESS STEEL (MIN. FY = 55 ksi) AND SHALL BE SELECTED FROM THE A.M.L. AND INSTALLED AS PER THE MANUFACTURER'S RECOMMENDATIONS. EACH ANCHOR SHALL HAVE AN ALLOWABLE CAPACITY OF 3 KIPS PULLOUT AND 3 KIPS SHEAR AFTER APPLICATION OF ANY REDUCTION FACTORS FOR ANCHOR SPACING AND EDGE DISTANCE.

WELDING SHALL BE IN ACCORDANCE WITH THE BRIDGE WELDING CODE OF THE AMERICAN WELDING SOCIETY (AWS D1.5-10), AND SECTION 809 OF THE LOUISIANA STANDARD SPECIFICATIONS FOR ROADS AND BRIDGES, 2016 EDITION.

NO PART OF ANY SIGN SHALL PROTRUDE INTO THE SHOULDER AREA. DIMENSIONS OF SUPPORT POST AND BRACKET SHALL BE ADJUSTED AS NEEDED PRIOR TO FABRICATION.

ANY PORTIONS OF THE EXISTING BARRIER THAT ARE DAMAGED SHALL BE REPAIRED TO THE SATISFACTION OF THE PROJECT ENGINEER.

DIMENSIONS RELATED TO THE BARRIER CONNECTION ARE BASED ON AS-BUILT DRAWINGS AND PREVIOUS STANDARDS. DIMENSIONS SHALL BE ADJUSTED AS NEEDED BASED ON FIELD MEASUREMENTS.

A 1/8" NEOPRENE PAD SHALL BE USED BETWEEN ALL STEEL AND CONCRETE CONTACT SURFACES.

MAX SIGN AREA = 40 SQFT.

SHEET NUMBER 229

DESIGN K. BRAUNER
CHECK V. TOURRES
INITIAL K. BRAUNER
CHECK V. TOURRES
REVIEW C. GUIDRY
SERIES • 12 OF 17

STATE OF LOUISIANA
KURT M. BRAUNER
License No. 32567
PROFESSIONAL ENGINEER
IN
CIVIL ENGINEERING
6/24/22

APPROVED BY CHIEF ENGINEER
7/1/2022
DATE

Z - BRACKET SIGN SUPPORTS (F - SHAPE BARRIER)

ROADSIDE SIGNING STANDARDS

STANDARD PLAN

DOTD
LOUISIANA DEPARTMENT OF TRANSPORTATION & DEVELOPMENT
BRIDGE AND STRUCTURAL DESIGN

6/24/2022 09:34

IP_PWP:d0964073\Roadside Traffic Signs 12.dgn

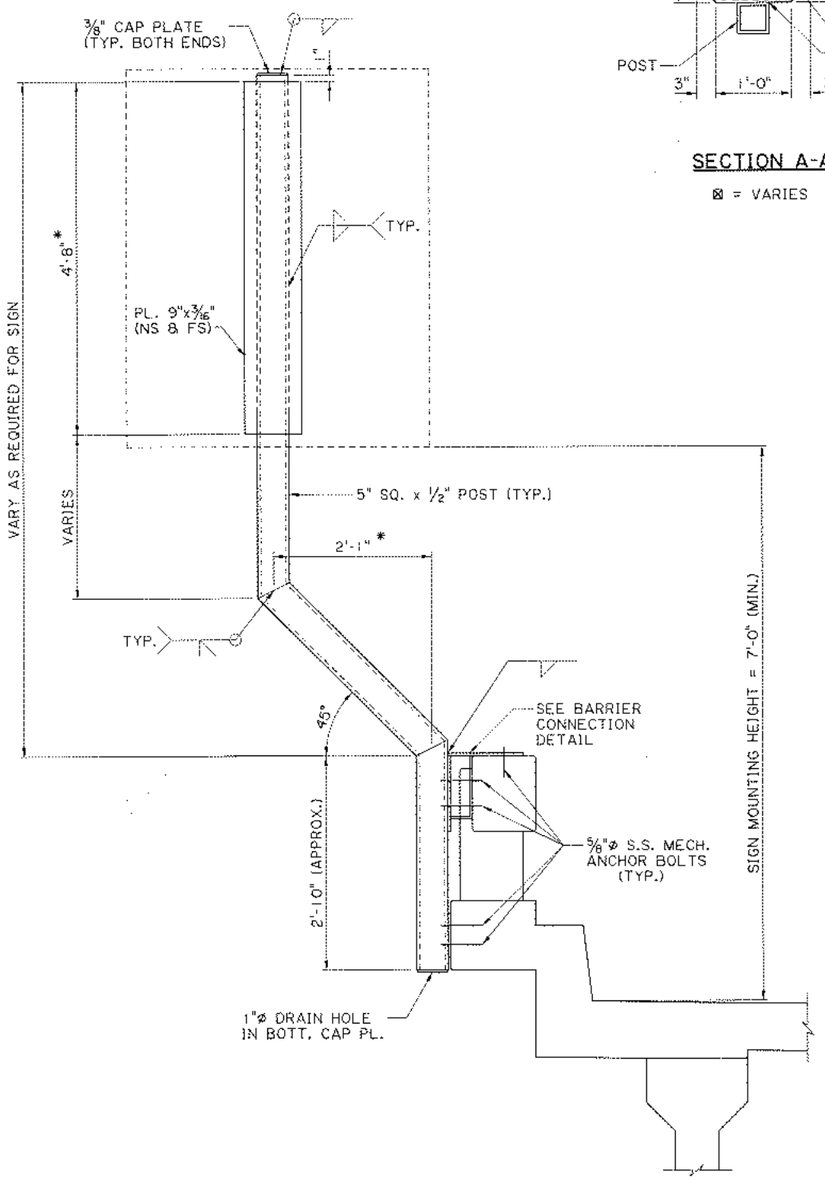

OFFSET SIGN SUPPORT

* DIMENSIONS ARE BASED ON A 5 FT. x 4 FT. SIGN.
ADJUST AS NEEDED FOR DIFFERENT SIGN SIZES.

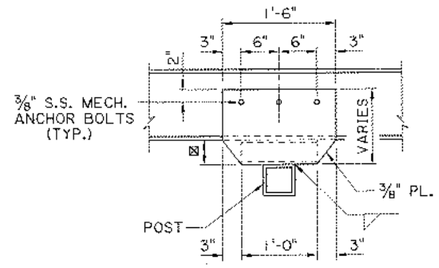

SECTION A-A

⊠ = VARIES

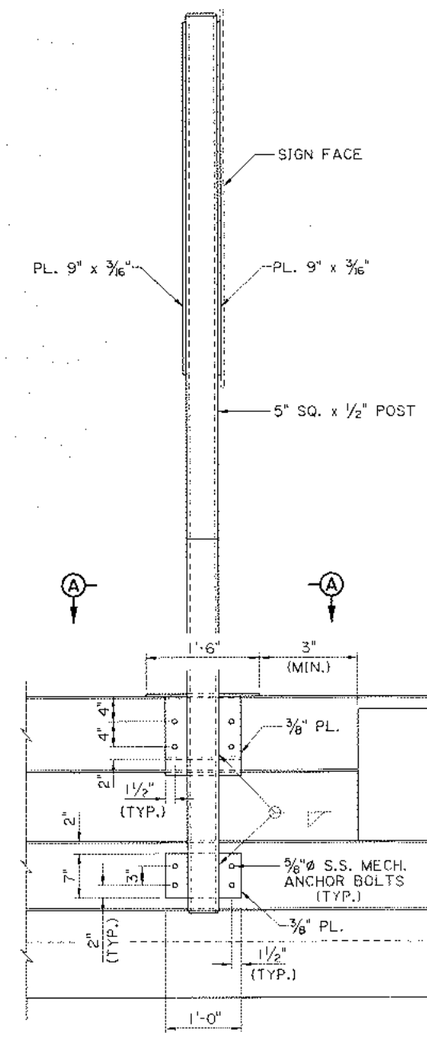

OUTSIDE ELEVATION SHOWING BARRIER

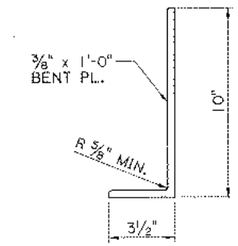

3/8" BENT PL. DETAIL

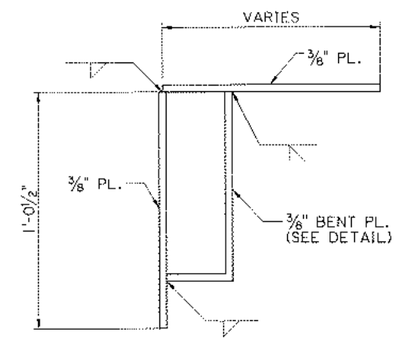

BARRIER CONNECTION DETAIL

NOTES:

STRUCTURAL MEMBERS SHALL BE AASHTO M270 GRADE 50 STEEL AND SHALL BE HOT DIPPED GALVANIZED PER ASTM A-123.

MECHANICAL ANCHOR BOLTS SHALL BE 5/8"Ø STAINLESS STEEL (MIN. FY = 55 ksi) AND SHALL BE SELECTED FROM THE A.M.L. AND INSTALLED AS PER THE MANUFACTURER'S RECOMMENDATIONS. EACH ANCHOR SHALL HAVE AN ALLOWABLE CAPACITY OF 3 KIPS PULLOUT AND 3 KIPS SHEAR AFTER APPLICATION OF ANY REDUCTION FACTORS FOR ANCHOR SPACING AND EDGE DISTANCE.

WELDING SHALL BE IN ACCORDANCE WITH THE BRIDGE WELDING CODE OF THE AMERICAN WELDING SOCIETY (AWS D1.5-10), AND SECTION 809 OF THE LOUISIANA STANDARD SPECIFICATIONS FOR ROADS AND BRIDGES, 2016 EDITION.

NO PART OF ANY SIGN SHALL PROTRUDE INTO THE SHOULDER AREA. DIMENSIONS OF SUPPORT POST AND BRACKET SHALL BE ADJUSTED AS NEEDED PRIOR TO FABRICATION.

ANY PORTIONS OF THE EXISTING BARRIER THAT ARE DAMAGED SHALL BE REPAIRED TO THE SATISFACTION OF THE PROJECT ENGINEER.

DIMENSIONS RELATED TO THE BARRIER CONNECTION ARE BASED ON AS-BUILT DRAWINGS AND PREVIOUS STANDARDS. DIMENSIONS SHALL BE ADJUSTED AS NEEDED BASED ON FIELD MEASUREMENTS.

A 1/8" NEOPRENE PAD SHALL BE USED BETWEEN ALL STEEL AND CONCRETE CONTACT SURFACES.

MAX SIGN AREA = 20 SQFT.

SHEET NUMBER 230

PARISH | CONTROL SECTION | STATE PROJECT

DESIGN K. BRAUNER
CHECK V. TOURRES
DETAIL K. BRAUNER
CHECK V. TOURRES
REVIEW C. GUIDRY
SUPERV. 13 OF 17

STATE OF LOUISIANA
KURT M. BRAUNER
License No. 30667
PROFESSIONAL ENGINEER
IN
CIVIL ENGINEERING
6/24/22

APPROVED BY CHIEF ENGINEER
DATE 7/1/2022

Z - BRACKET SIGN SUPPORT
(POST AND RAIL BARRIER)

ROADSIDE SIGNING STANDARDS

STANDARD PLAN

DOTD
LOUISIANA DEPARTMENT OF TRANSPORTATION & DEVELOPMENT

BRIDGE AND STRUCTURAL DESIGN

IP PW2:d0964073\Roadside Traffic Signs 13.dgn
6/24/2022 09:35

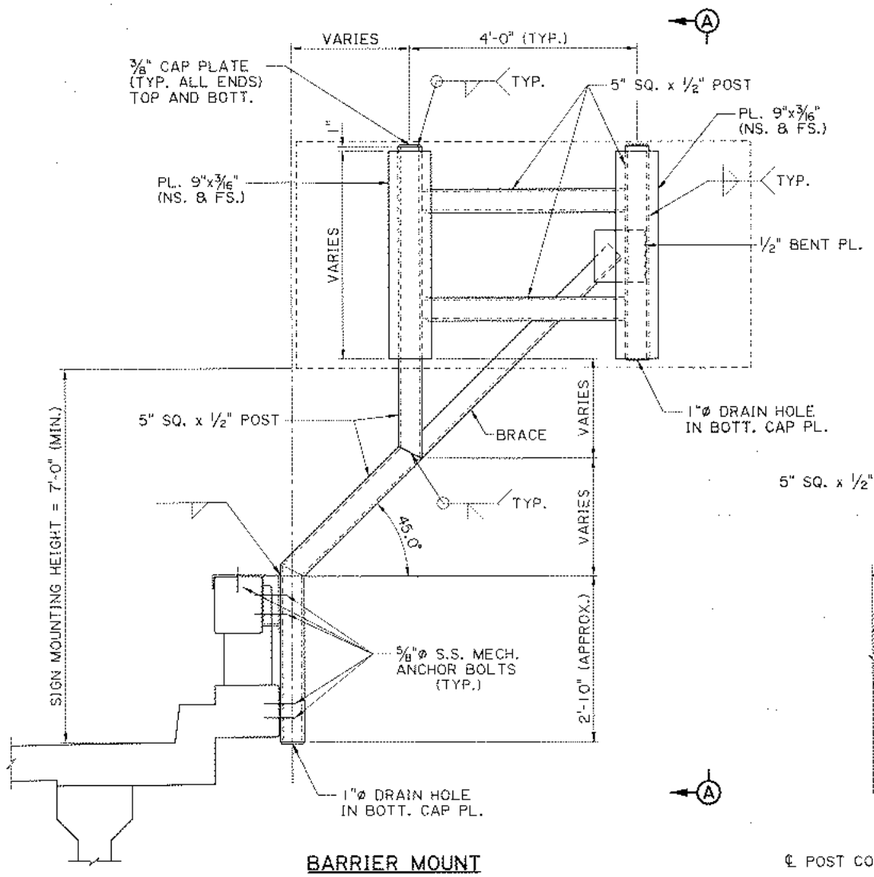

BARRIER MOUNT

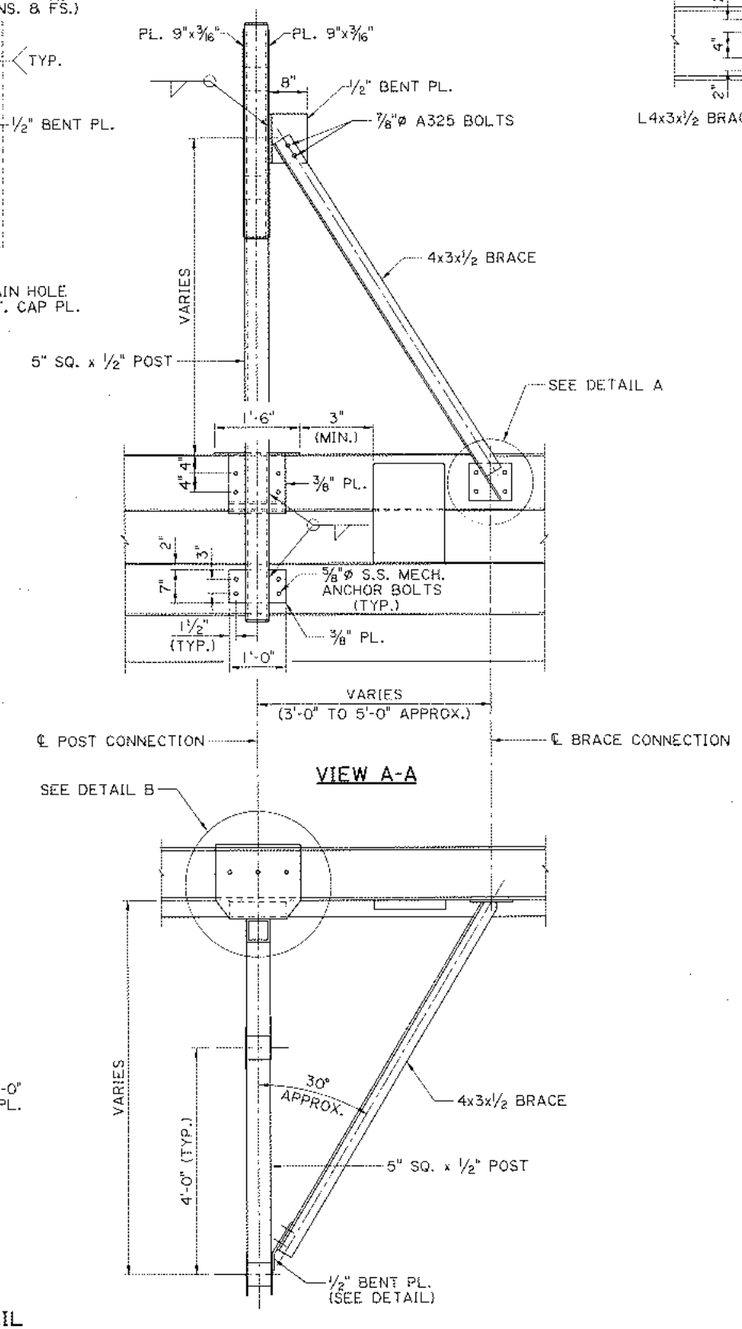

VIEW A-A

TOP VIEW

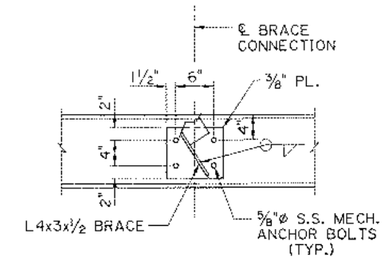

DETAIL A

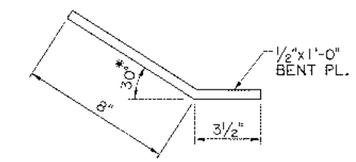

1/2" BENT PLATE DETAIL

* ANGLE IS APPROXIMATE. VARY AS NEEDED.

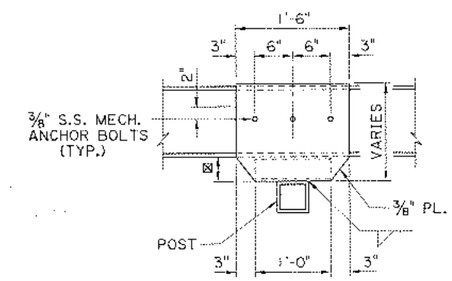

DETAIL B

⊠ = VARIES

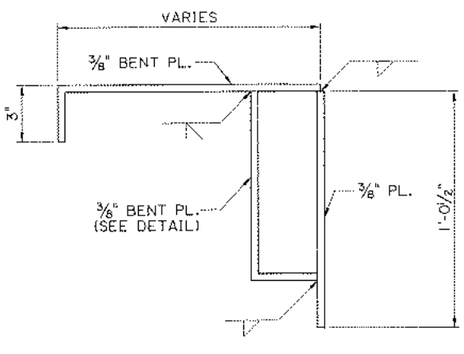

BARRIER CONNECTION DETAIL

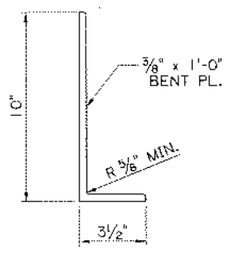

3/8" BENT PL. DETAIL

NOTES:

STRUCTURAL MEMBERS SHALL BE AASHTO M270 GRADE 50 STEEL AND SHALL BE HOT DIPPED GALVANIZED PER ASTM A-123. A325 BOLTS TO BE GALVANIZED PER ASTM A-153.

MECHANICAL ANCHOR BOLTS SHALL BE 5/8"ø STAINLESS STEEL (MIN. FY = 55 ksi) AND SHALL BE SELECTED FROM THE A.M.L. AND INSTALLED AS PER THE MANUFACTURER'S RECOMMENDATIONS. EACH ANCHOR SHALL HAVE AN ALLOWABLE CAPACITY OF 3 KIPS PULLOUT AND 3 KIPS SHEAR AFTER APPLICATION OF ANY REDUCTION FACTORS FOR ANCHOR SPACING AND EDGE DISTANCE.

WELDING SHALL BE IN ACCORDANCE WITH THE BRIDGE WELDING CODE OF THE AMERICAN WELDING SOCIETY (AWS D1.5-10), AND SECTION 809 OF THE LOUISIANA STANDARD SPECIFICATIONS FOR ROADS AND BRIDGES, 2016 EDITION.

NO PART OF ANY SIGN SHALL PROTRUDE INTO THE SHOULDER AREA. DIMENSIONS OF SUPPORT POST AND BRACKET SHALL BE ADJUSTED AS NEEDED PRIOR TO FABRICATION.

ANY PORTIONS OF THE EXISTING BARRIER THAT ARE DAMAGED SHALL BE REPAIRED TO THE SATISFACTION OF THE PROJECT ENGINEER.

DIMENSIONS RELATED TO THE BARRIER CONNECTION ARE BASED ON AS-BUILT DRAWINGS AND PREVIOUS STANDARDS. DIMENSIONS SHALL BE ADJUSTED AS NEEDED BASED ON FIELD MEASUREMENTS.

A 1/8" NEOPRENE PAD SHALL BE USED BETWEEN ALL STEEL AND CONCRETE CONTACT SURFACES.

MAX SIGN AREA = 40 SQFT.

SHEET NUMBER 231

PARISH | CONTROL SECTION | STATE PROJECT

DESIGN K. BRAUNER | CHECK V. TOURRES | DETAIL K. BRAUNER | CHECK V. TOURRES | REVIEW C. GUIDRY | SERIES 14 OF 17

STATE OF LOUISIANA
KURT M. BRAUNER
License No. 32567
PROFESSIONAL ENGINEER
IN
CIVIL ENGINEERING
6/24/22

APPROVED BY CHIEF ENGINEER
DATE: 7/1/2022

Z - BRACKET SIGN SUPPORT (POST AND RAIL BARRIER)

STANDARD PLAN | ROADSIDE SIGNING STANDARDS

DOTD
LOUISIANA DEPARTMENT OF TRANSPORTATION & DEVELOPMENT

BRIDGE AND STRUCTURAL DESIGN

IP_PW2:d0964073\Roadside Traffic Signs 14.dgn 6/24/2022 09:37

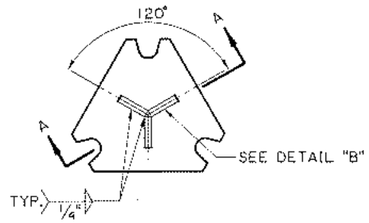

TOP VIEW STUB POST

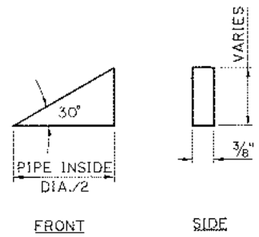

DETAIL "B"
3 REQ'D.

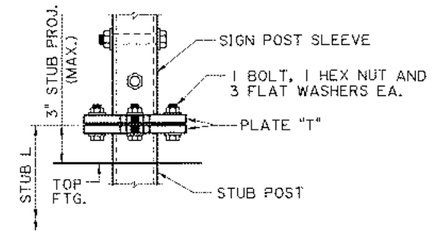

ELEVATION OF BASE CONNECTION
STEEL

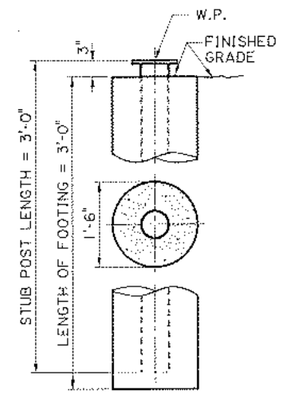

FOOTING DETAIL
PIPE SECTIONS

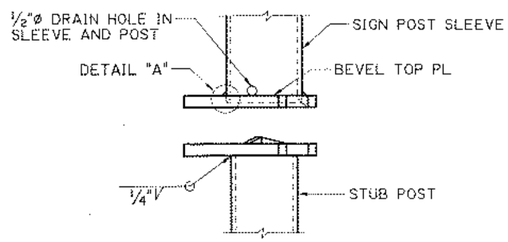

SECTION A-A

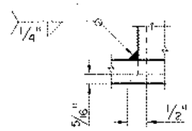

DETAIL "A"

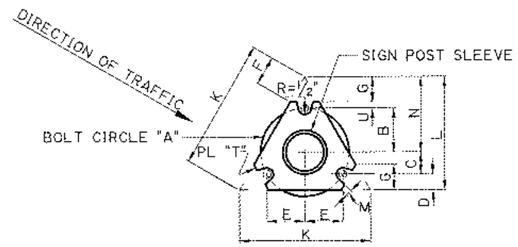

PLAN OF BASE

STEEL MULTI-DIRECTIONAL BASE CONNECTION DATA															
NOMINAL PIPE SIZE FOR POST SLEEVE	BOLT SIZE ⊙ & TORQUE	WELD SIZE	T	A	B	C	D	E	F	G	K	L	M	N	U
3 1/2"Ø SCH 40	5/8"Ø T=226	3/8"	5/8"	7"	3 1/2"	1 3/4"	1 1/4"	3"	2 5/16"	2"	10 3/8"	9"	1/2"	6"	1/2"

FOR STUB POST LENGTH & FOOTING DIMENSION SEE FOOTING DETAIL.

⊙ TORQUE IN INCH-LBS., BOLTS ARE HIGH STRENGTH

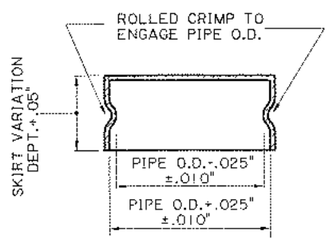

FRICTION CAP DETAIL
(USED AT TOP OF ALL POSTS)

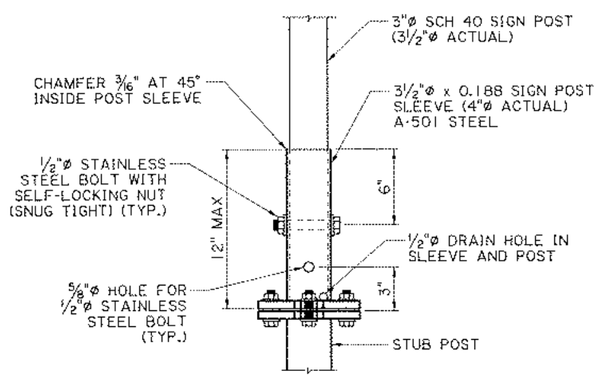

POST SLEEVE DETAIL

PROCEDURE FOR ASSEMBLY OF BASE CONNECTION:

SPECIAL CARE SHALL BE TAKEN TO SET THE BASE PLUMB TO AVOID EXCESSIVE SHIMMING AT THE BREAK-AWAY FEATURE AFTER FINAL INSTALLATION. EXCESSIVE SHIMMING COULD IMPAIR THE BREAK-AWAY FEATURE FOR WHICH THIS INSTALLATION WAS DESIGNED. SHIM PACKS SHOWN ON THIS DRAWING SHOULD BE SUFFICIENT TO ALLOW FOR NORMAL MISALIGNMENT.

1. BASE SHALL BE ALIGNED AND SET PLUMB BEFORE OR IMMEDIATELY AFTER POURING CONCRETE FOOTING.
2. H.S. BOLTS IN BASE PLATE SHALL BE TIGHTENED TO THE PRESCRIBED TORQUE. CARE SHALL BE TAKEN TO AVOID OVERTIGHTING.

FRICTION CAPS:

CAPS MAY BE MANUFACTURED FROM EITHER HOT ROLLED OR COLD ROLLED STEEL SHEETS. THE MINIMUM SHEET METAL THICKNESS SHALL BE 24 GAUGE. THE RIM EDGES SHALL BE REASONABLY STRAIGHT AND SMOOTH. CAPS SHALL BE SIZED AND FORMED IN SUCH A MANNER AS TO PRODUCE A DRIVE-ON FRICTION FIT AND HAVE NO TENDENCY TO ROCK WHEN SEATED ON THE PIPE. THE DEPTH SHALL BE SUFFICIENT TO GIVE POSITIVE PROTECTION AGAINST ENTRANCE OF RAINWATER. THEY SHALL BE FREE OF SHARP CREASES OR INDENTATIONS AND SHOW NO EVIDENCE OF METAL FRACTURE. CAPS SHALL HAVE A ELECTRODEPOSITED COATING OF ZINC IN ACCORDANCE WITH THE REQUIREMENTS OF A.S.T.M. SPECIFICATION B633 SC4, TYPE I.

GALVANIZING:

ALL STEEL POST, PLATE, AND SLEEVE MEMBERS SHALL BE GALVANIZED PER ASTM A-123.

ALL MISC. HARDWARE (EXCEPT FOR STAINLESS STEEL BOLTS) SHALL BE GALVANIZED PER ASTM A-153.

SHEET NUMBER 232

PARISH | CONTROL SECTION | STATE PROJECT

DESIGN K. BRAUNER
CHECK C. GUIDRY
DETAIL K. BRAUNER
CHECK C. GUIDRY
REVIEW C. BOURGEOIS
SHEET # 15 OF 17

STATE OF LOUISIANA
KURT N. BRAUNER
License No. 30067
PROFESSIONAL ENGINEER
IN
CIVIL ENGINEERING
6/24/22

APPROVED BY CHIEF ENGINEER
DATE 7/1/2022

CONTRAFLOW SIGNS (GROUND MOUNTED)

ROADSIDE SIGNING STANDARDS

STANDARD NO.

DOTD
LOUISIANA DEPARTMENT OF TRANSPORTATION & DEVELOPMENT
BRIDGE AND STRUCTURAL DESIGN

IP PW2:d0964073\Roadside Traffic Signs 15.dgn
6/24/2022 09:38

⊠ SIGN MAY BE OFFSET FROM THE CENTERLINE OF POST. REGARDLESS OF ITS ORIENTATION, NO PART OF THE SIGN SHALL EXTEND BEYOND THE FRONT EDGE OF THE TOP OF BARRIER RAIL. COST OF OFFSET SIGN ATTACHMENT SHALL BE PAID FOR UNDER 729-08-00210 "MOUNTING (3½" SIZE POST) (STRUCTURE MOUNT)".

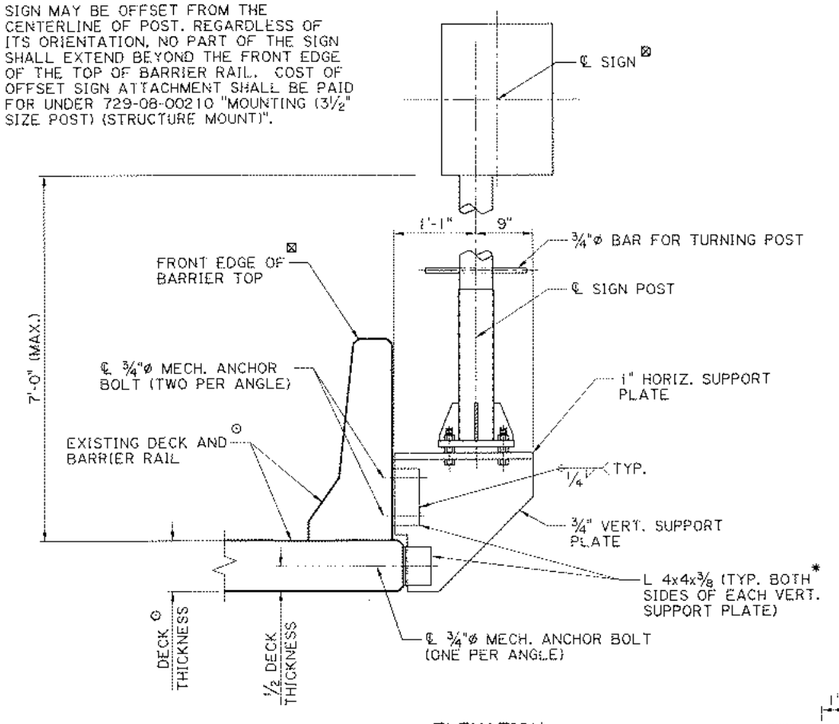

ELEVATION

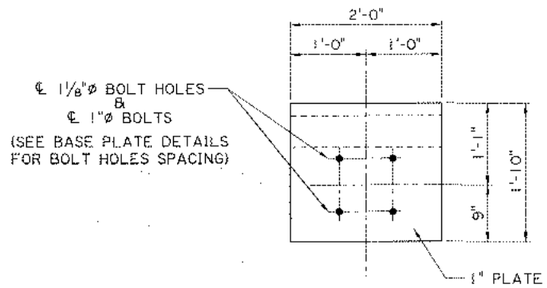

1" HORIZ. SUPPORT PLATE

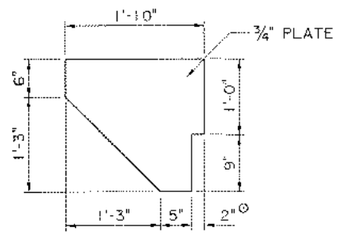

¾" VERT. SUPPORT PLATE

SIGN SUPPORT BRACKET DETAILS

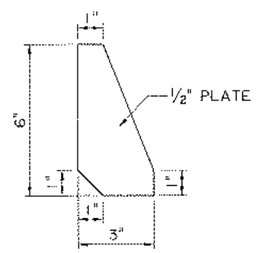

½" STIFFENER

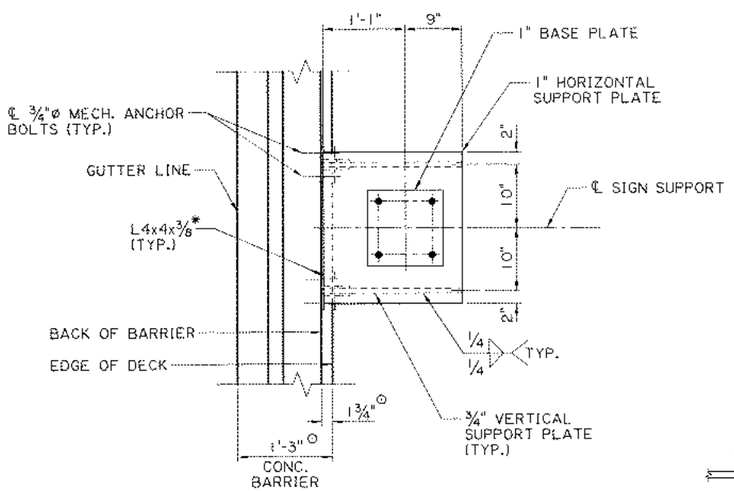

PLAN

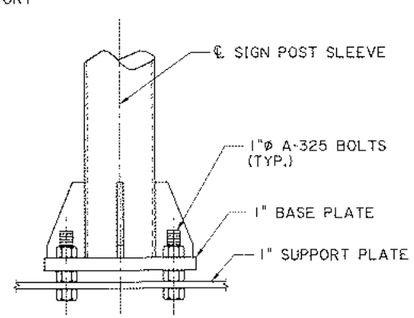

1"ø BOLT DETAIL

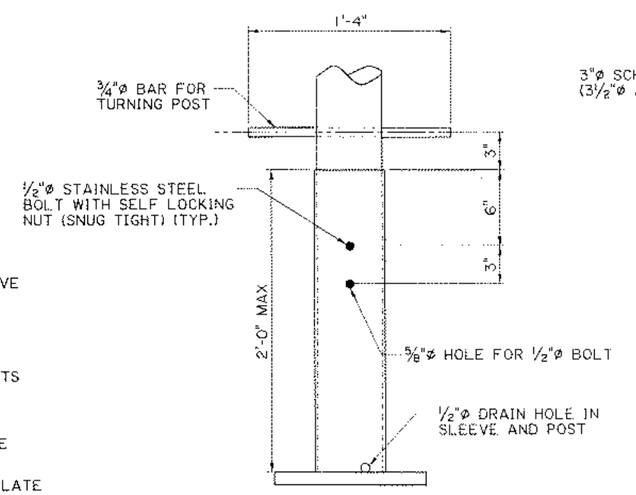

⅝"ø BOLT DETAIL
(STIFFENERS NOT SHOWN FOR CLARITY)

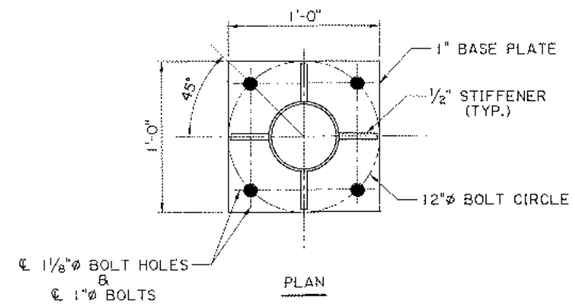

PLAN

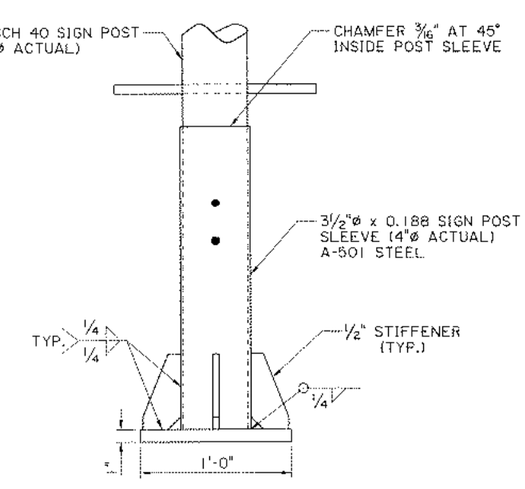

ELEVATION

1" BASE PLATE & SIGN POST SLEEVE DETAILS

NOTES:

STRUCTURAL MEMBERS SHALL BE AASHTO M270 GRADE 50 STEEL AND SHALL BE HOT DIPPED GALVANIZED PER ASTM A-123. ALL MISC. HARDWARE (EXCEPT STAINLESS STEEL BOLTS) SHALL BE GALVANIZED AS PER ASTM A-153.

⊙ ALL EXISTING DIMENSIONS ARE TO BE VERIFIED BY THE CONTRACTOR PRIOR TO FABRICATION. ANY ADJUSTMENTS TO SUPPORT BRACKET DIMENSIONS SHALL BE APPROVED BY THE ENGINEER.

* EQUIVALENT BENT PLATES MAY BE USED. ADJUST ANGLE OF BEND AS NEEDED TO ATTACH TO BARRIER RAIL.

PAYMENT FOR THE TYPE "A" SIGN POST AND SUPPORT BRACKET SHALL BE UNDER ITEM NO. 729-08-00210, "MOUNTING (3½" SIZE POST) (STRUCTURE MOUNT)".

MECHANICAL ANCHOR BOLTS SHALL BE ¾"ø STAINLESS STEEL (MIN. FY = 55 ksi) AND SHALL BE SELECTED FROM THE A.M.L. AND INSTALLED AS PER THE MANUFACTURER'S RECOMMENDATIONS. EACH ANCHOR SHALL HAVE AN ALLOWABLE CAPACITY OF 3 KIPS PULLOUT AND 3 KIPS SHEAR AFTER APPLICATION OF ANY REDUCTION FACTORS FOR ANCHOR SPACING AND EDGE DISTANCE.

A ⅛" NEOPRENE PAD SHALL BE USED BETWEEN ALL STEEL AND CONCRETE CONTACT SURFACES.

ANY PORTIONS OF THE EXISTING BARRIER THAT ARE DAMAGED SHALL BE REPAIRED TO THE SATISFACTION OF THE PROJECT ENGINEER.

REGARDLESS OF ITS ORIENTATION, NO PART OF ANY SIGN SHALL EXTEND BEYOND THE FRONT EDGE OF THE TOP OF BARRIER RAIL. DIMENSIONS OF SUPPORT POST AND BRACKET SHALL BE ADJUSTED AS NEEDED PRIOR TO FABRICATION.

MAXIMUM ALLOWABLE SIGN AREA = 20 SQ. FT.

PARISH | CONTROL SECTION | STATE PROJECT

DESIGN CHECK: K. BRAUNER / C. GUIDRY
DETAIL CHECK: K. BRAUNER / C. GUIDRY
REVIEW: C. BOURGEOIS
SHEETS 16 OF 17

STATE OF LOUISIANA — KURT M. BRAUNER, License No. 30067, PROFESSIONAL ENGINEER IN CIVIL ENGINEERING — 6/24/22

APPROVED BY CHIEF ENGINEER — DATE: 7/1/2022

CONTRAFLOW SIGNS (F - SHAPE BARRIER)

ROADSIDE SIGNING STANDARDS

TRANSPORTATION PLAN

DOTD — LOUISIANA DEPARTMENT OF TRANSPORTATION & DEVELOPMENT

BRIDGE AND STRUCTURAL DESIGN

6/24/2022 03:39
TP PWP:d0964073\Roadside Traffic Signs 16.dgn

⊠ SIGN MAY BE OFFSET FROM THE CENTERLINE OF POST. REGARDLESS OF ITS ORIENTATION, NO PART OF THE SIGN SHALL EXTEND BEYOND THE FRONT EDGE OF THE TOP OF BARRIER RAIL. COST OF OFFSET SIGN ATTACHMENT SHALL BE PAID FOR UNDER 729-08-00210 "MOUNTING (3½" SIZE POST) (STRUCTURE MOUNT)".

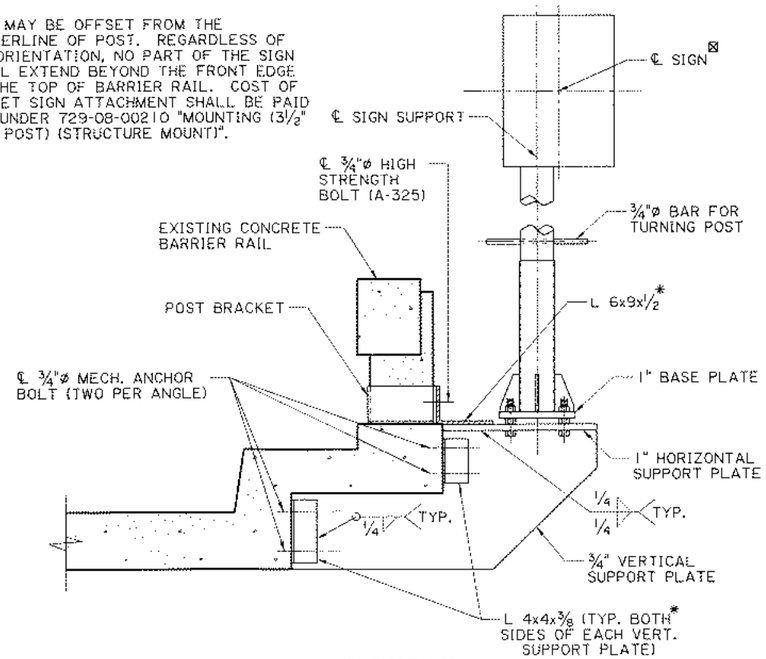

ELEVATION

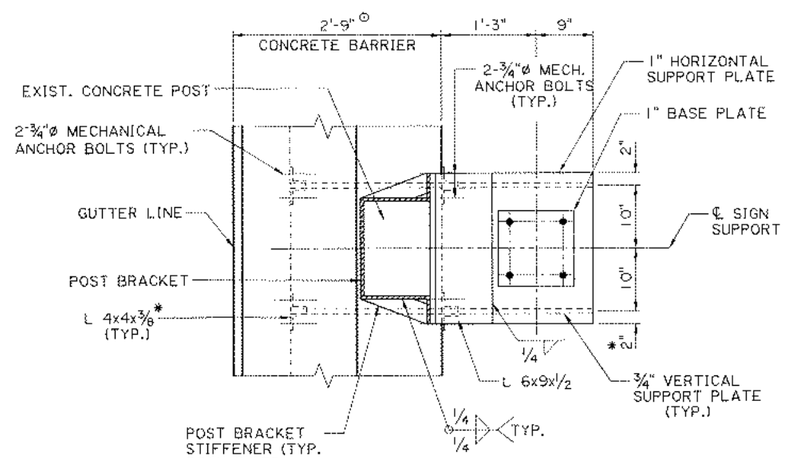

PLAN

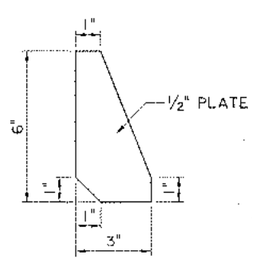

½" STIFFENER

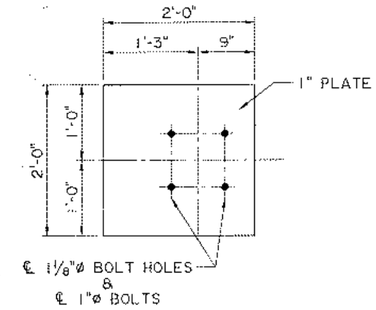

1" HORIZONAL SUPPORT PLATE

(SEE BASE PLATE DETAILS FOR BOLT HOLES SPACING)

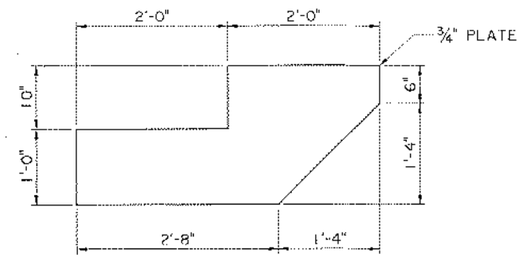

¾" VERT. SUPPORT PLATE ⊙

SIGN SUPPORT BRACKET DETAILS

NOTES:

STRUCTURAL MEMBERS SHALL BE AASHTO M270 GRADE 50 STEEL AND SHALL BE HOT DIPPED GALVANIZED PER ASTM A-123. ALL MISC. HARDWARE (EXCEPT STAINLESS STEEL BOLTS) SHALL BE GALVANIZED AS PER ASTM A-153.

⊙ ALL EXISTING DIMENSIONS ARE TO BE VERIFIED BY THE CONTRACTOR PRIOR TO FABRICATION. ANY ADJUSTMENTS TO SUPPORT BRACKET DIMENSIONS SHALL BE APPROVED BY THE ENGINEER.

* EQUIVALENT BENT PLATES MAY BE USED. ADJUST ANGLE OF BEND AS NEEDED TO ATTACH TO BARRIER RAIL.

PAYMENT FOR THE TYPE "A" SIGN POST AND SUPPORT BRACKET SHALL BE UNDER ITEM NO. 729-08-00210, "MOUNTING (3½" SIZE POST) (STRUCTURE MOUNT)".

MECHANICAL ANCHOR BOLTS SHALL BE ¾"ø STAINLESS STEEL (MIN. FY = 55 ksi) AND SHALL BE SELECTED FROM THE A.M.L. AND INSTALLED AS PER THE MANUFACTURER'S RECOMMENDATIONS. EACH ANCHOR SHALL HAVE AN ALLOWABLE CAPACITY OF 3 KIPS PULLOUT AND 3 KIPS SHEAR AFTER APPLICATION OF ANY REDUCTION FACTORS FOR ANCHOR SPACING AND EDGE DISTANCE.

A ⅛" NEOPRENE PAD SHALL BE USED BETWEEN ALL STEEL AND CONCRETE CONTACT SURFACES.

ANY PORTIONS OF THE EXISTING BARRIER THAT ARE DAMAGED SHALL BE REPAIRED TO THE SATISFACTION OF THE PROJECT ENGINEER.

REGARDLESS OF ITS ORIENTATION, NO PART OF ANY SIGN SHALL EXTEND BEYOND THE FRONT EDGE OF THE TOP OF BARRIER RAIL. DIMENSIONS OF SUPPORT POST AND BRACKET SHALL BE ADJUSTED AS NEEDED PRIOR TO FABRICATION.

MAXIMUM ALLOWABLE SIGN AREA = 20 SQ. FT.

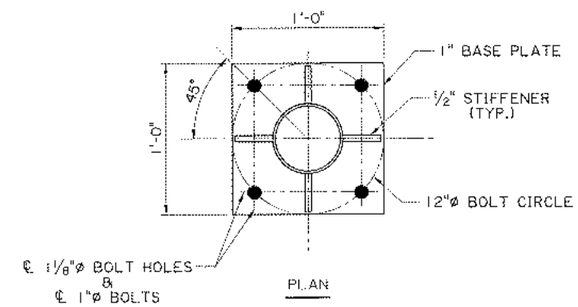

PLAN

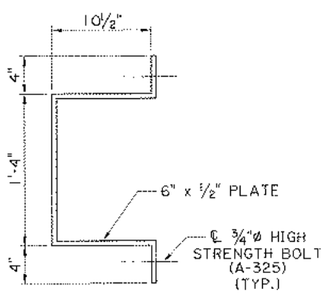

POST BRACKET ⊙

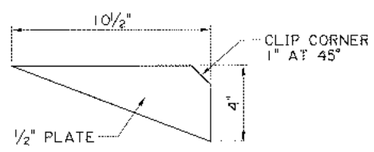

POST BRACKET STIFFENER ⊙

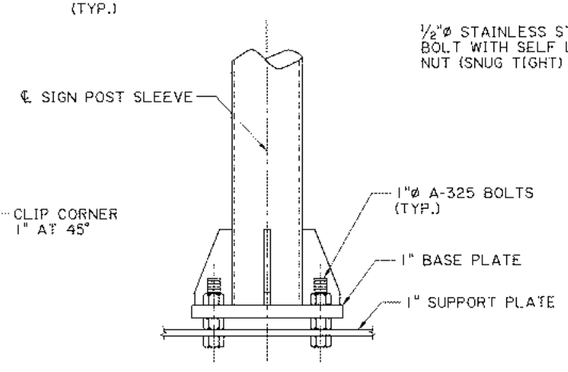

1"ø BOLT DETAIL

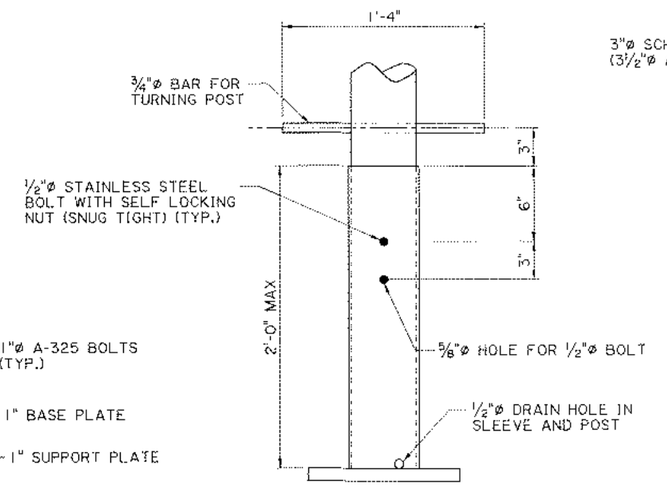

⅝"ø BOLT DETAIL

(STIFFENERS NOT SHOWN FOR CLARITY)

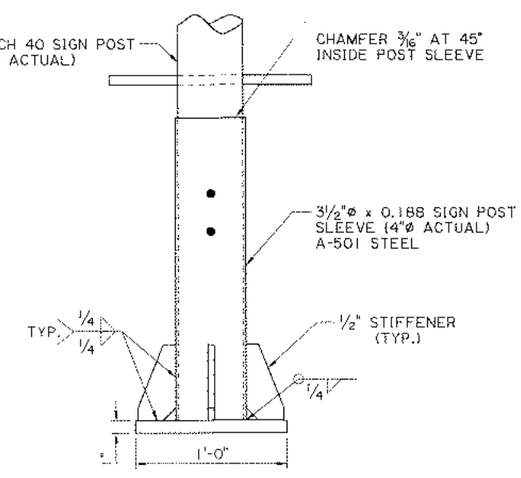

ELEVATION

1" BASE PLATE & SIGN POST SLEEVE DETAILS

SHEET NUMBER 234

MASTER CONTROL SECTION STATE PROJECT

DESIGN K. BRAUNER
CHECK C. GUIDRY
DETAIL K. BRAUNER
CHECK C. GUIDRY
REVISION C. BOURGEOIS
SHEET 17 OF 17

STATE OF LOUISIANA
KURT M. BRAUNER
License No. 35547
PROFESSIONAL ENGINEER
IN
CIVIL ENGINEERING
6/24/22

APPROVED BY CHIEF ENGINEER:
DATE: 7/1/2022

CONTRAFLOW SIGNS (POST AND RAIL BARRIER)

ROADSIDE SIGNING STANDARDS

STANDARD PLAN

DOTD
LOUISIANA DEPARTMENT OF TRANSPORTATION & DEVELOPMENT
BRIDGE AND STRUCTURAL DESIGN

6/24/2022 09:40

IP_PWP:d0964073\Roadside Traffic Signs 17.dgn

GENERAL PROVISIONS

- All temporary traffic control (TTC) devices used shall be in accordance with the Louisiana Standard Specifications for Roads and Bridges, the MUTCD, and shall meet the NCHRP Report 350 or MASH requirements for Test Level 3 devices where applicable.
- Materials used for TTC shall be in accordance with the Louisiana Standard Specifications for Roads and Bridges and, when applicable, the LADOTD QPL.
- No TTC shall be erected without the approval of the Engineer and until work is about to begin, unless they are covered.
- No lane closures, lane shifts, diversions, or detours shall occur without the approval of the Engineer.
- Responsibility is hereby placed upon the contractor for the installation, maintenance, and operation of all TTC devices called for in these plans or required by the Engineer for the protection of the traveling public as well as all LADOTD and construction personnel.
- The contractor shall also be responsible for the maintenance of all permanent signs, pavement markings, and traffic signals left in place as essential to the safe movement and guidance of traffic within the project limits unless noted in the plans.
- The DTOE shall serve as a technical advisor to the Engineer for all traffic control matters.
- The Chief Construction Engineer or his appointed designee shall approve all signs and situations not addressed in the plans based on the recommendations of the Project Engineer and the DTOE. All changes shall be noted in all project traffic control diaries.
- The Chief Construction Engineer or his appointed designee shall approve all design speeds of diversions or shifts if it differs from design plans, based on the recommendations of the Project Engineer and the DTOE.
- All temporary traffic control plans shall comply with the Transportation Management Plan.
- Any additional signs shown in the MUTCD and required by the Engineer shall be installed under Item 713-01-00100.
- Neither work activity nor storage of equipment, vehicles, TMAs, or materials shall occur within the buffer space.
- When a work area has been established on one side of the roadway only, there shall be no conflicting operations or parking on the opposite shoulder within 500 feet of the work area.
- A lighting plan shall be submitted to the Engineer 30 days prior to night work for approval. (See section 105.20 of the Louisiana Standard Specifications for Roads and Bridges.)
- Parking of vehicles or unattended equipment, or storage of materials, within the clear zone shall not be permitted unless protected by guard rail or barriers. If the clear zone is not defined on the plan sheets, the Engineer shall verify.
- Immediately upon removal of existing guard rail, the contractor shall install and maintain an NCHRP Report 350 or MASH approved device to protect the blunt end of the bridge or column until new guard rail is installed. After removal of the existing guard rail, new guard rail should be installed within seven (7) days. On non-NHS routes with shoulders less than 8 feet wide: If an NCHRP 350 Report Test Level 3 or MASH device is required but the field conditions of the roadway cannot support a Test Level 3 device, then a Test Level 2 device can be substituted in its place upon approval by the Engineer.
- All costs associated with crash devices are to be included in Item 713-01-00100.
- Sight distance should be considered when placing traffic control devices.
- On all mainline Interstate, a minimum of 1.5 feet of paved shoulder on the left and right side shall be maintained at all times.
- On Interstates, a minimum of 11 foot lanes shall be maintained. On all other roadways, a 10 foot minimum travel lane should be maintained where practical.
- TTC Standards are not drawn to scale.
- The contractor shall develop an internal traffic control plan approved by the Engineer prior to each phase.
- Truck restrictions such as (but not limited to) restricting lanes, oversize loads or times of travel, may be required for narrow lanes or other field conditions.

PAVEMENT MARKINGS (see QPL)

- All pavement markings within the limits of the project that are in conflict with the project signing or the required traffic movements shall be removed from the pavement by blast cleaning or grinding. (Existing striping shall not be painted over with black paint or covered with tape.)
- If special pavement markings are needed, they shall be reflectorized, removable, and accompanied by the proper signage.
- Temporary Raised Pavement Markers may be added to supplement temporary striping in areas of transition, in tapers, in diversions, and in other areas of need as shown in the plans or as directed by the Engineer.
- Materials and placement of temporary pavement markings shall conform to Section 713 of the Louisiana Standard Specifications for Roads and Bridges. If no pay item exists for temporary markings they shall be installed under item 713-01-00100.
- Temporary markings installed in the permanent configuration shall comply with LADOTD pavement marking standard plans, MUTCD, and/or the permanent striping plans.

PORTABLE CHANGEABLE MESSAGE SIGNS (PCMS)

- PCMS shall be used on all Interstate Highways and on all other roadways (where space is available) with an ADT greater than 20,000.
- When used in advance of a lane closure or a lane shift, the PCMS should be placed on the right hand side of the road a minimum distance of 2 miles in advance of the taper for interstates and to be determined by the Engineer on other highways.
- For interstates and multi-lane highways, if vehicles are queuing beyond the 2 mile PCMS, an additional PCMS should be placed on the right hand side of the road approximately 5 miles in advance of the taper or at the end of the queue, whichever is greater.
- PCMS messages shall conform to EDSM VI.2.1.10 or shall be approved by the DTOE. Messages shall be no more than 3 lines and 2 screens.
- PCMS should be placed as far from the traveled lane as possible. They shall be shielded by guard rail or barriers. If this is not possible they shall be delineated with one drum at each corner.
- If the PCMS has to be placed on the shoulder then the contractor shall install a shoulder closure.
- When the PCMS is not displaying a work zone appropriate message pertaining to the ongoing construction project it shall be shielded by guard rail or barriers, or removed from the clear zone.

ABBREVIATIONS

AASHTO .....American Association of State Highway and Transportation Officials
ADT .....Average Daily Traffic
AGCI.....Associated General Contractors of America
ANSI.....American National Standards Institute
ATSSA .....American Traffic Safety Services Association
B.O.P. .....Beginning of Project
DTOE .....District Traffic Operations Engineer
E.O.P. .....End of Project
LADOTD .....Louisiana Department of Transportation and Development
MASH .....AASHTO Manual for Assessing Safety Hardware
MUTCD .....Manual on Uniform Traffic Control Devices
NCHRP .....National Cooperative Highway Research Program
NHS .....National Highway System
PCMS .....Portable Changeable Message Sign
QPL .....Qualified Products List
TMA .....Truck Mounted Attenuator
TMC .....Traffic Management Center
TTC .....Temporary Traffic Control
TTC Standards ..Temporary Traffic Control Standard Plans

SPEED LIMITS

- The Engineer may approve a 10 mph drop in the speed limit for posted speeds of 45 mph or greater and for any construction, maintenance, or utility operation that requires one or more of the following:
  - (A) The condition of the traveled way is degraded due to milled surfaces or uneven travel lane lines greater than 1.5 inches.
  - (B) Work is in progress in the immediate vicinity of the travel way requiring lane closures or lane width reductions less than 11 feet.
  - (C) Workers present on the shoulder within 2 feet of the edge of the traveled way without barrier protection.
- The reduced speed zone shall only apply to those portions of the project limits affected. The Engineer may allow SPEED LIMIT WHEN FLASHING signs to supplement reduced speed zones.
- If the speed limit is reduced, speed limit signs shall be placed:
  - (A) beyond major intersections;
  - (B) at one mile intervals in rural areas;
  - (C) at half mile intervals in urban areas.
- At the end of the reduced speed zone, a speed limit sign displaying the original speed limit prior to construction shall be installed.
- For all other speed limit reductions not listed above the Project Engineer and the DTOE shall recommend the speed reduction to the Chief Construction Engineer or his appointed designee for approval.
- If the speed limit is reduced more than 10 mph, placement of the signs shall be re-evaluated according to the MUTCD.

FLASHING ARROW BOARDS

- All Flashing Arrow Boards shall be 4 feet by 8 feet and Type C.
- Flashing Arrow Boards should be placed on the shoulder. When there is no shoulder or median area, the arrow board shall be placed within the closed lane behind the channelizing devices and as close to the beginning of the taper as practical.
- Flashing arrow boards shall be delineated with retroreflective TTC devices.
- At no time shall the arrow board encroach in the traveled way. When Flashing Arrow Board signs are not being used, they shall be shielded by guard rail or barriers, or removed.
- Arrow boards shall only be used for lane reduction tapers and shall not be used for lane shifts.

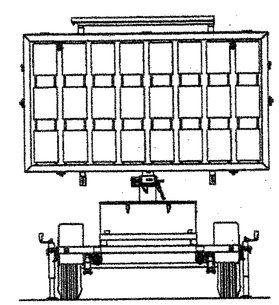

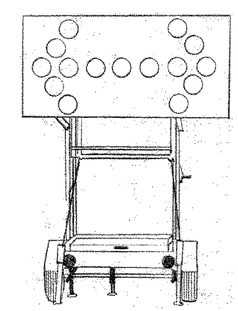

ALL TTC STANDARDS SHOW MINIMUM CONSTRUCTION SIGNING.
ALL SITUATIONS SHALL BE REVIEWED AND/OR DESIGNED BY THE ENGINEER.
CONTRACTORS ARE RESPONSIBLE FOR COMPLYING WITH ALL TTC STANDARDS.

SHEET NUMBER 235

PARISH | FEDERAL PROJECT | STATE PROJECT

DESIGNED J. COLVIN
CHECKED P. ALLAIN
DETAILED M.D.DRDOGNE
CHECKED J. COLVIN
DATE 02/13/2013
SHEET

REVISION DESCRIPTION | BY | DATE

DATE: 3-12-13

APPROVED BY CHIEF ENGINEER:

TEMPORARY TRAFFIC CONTROL
GENERAL NOTES SHEET

TTC-00 (A)

TRAFFIC ENGINEERING

SIGNS

- All signs used for temporary traffic control shall follow the plans, the LADOTD TTC Standards and the MUTCD.
- Signs shown in the TTC illustrations are typical and may vary with each specific condition.
- One Type B High Intensity light shall be used to supplement the first sign (or pair of signs) that gives warning about a lane closure during nighttime operations (See AML).
- Mesh rollup signs shall not be allowed on any project.
- Contractor shall use caution not to damage existing signs which remain in place. Any LADOTD signs damaged by work operations shall be replaced by the contractor under item 713-01-00100.
- All signs (permanent and temporary) shall be removed or completely covered with a strong, lightweight, opaque material when no longer applicable. (Burlap is not an acceptable material to cover signs).
- At no time shall signs warning against a particular operation be left in place once the operation has been completed or where the condition has been removed.
- Warning signs used for temporary traffic controls shall meet the following guidelines unless otherwise noted in the plans:
  - (A) size shall be 48 inches by 48 inches.
  - (B) see the Louisiana Standard Specifications for Roads and Bridges and the AML for sheeting information.
  - (C) lateral distance of signs shall be a minimum of 6 feet from the edge of shoulder or edge of pavement if no shoulder exists and 2 feet from the back of curb in urban areas (see diagram).
- When portable sign frames are not in use, they shall be moved to an area inaccessible to traffic and not visible to the driver.
- Left side mounted signs will not be required for roadways with a center left turn lane and for undivided roadways.
- Vinyl roll up signs may be used if work zone is in place for 12 hours or less, there are no more than 2 lanes in each direction and if signs meet all size, color, retroreflectivity and NCHRP 350 Report or MASH requirements.
- All signs shall be visible to the drivers (i.e. no obstructions such as on street parking or other traffic control devices shall block the sign).
- On divided highways, signs shall be placed on the right and the left as shown on the TTC standards.
- 1 foot portable sign stands may be used if the work zone is in place for 14 hours or less and there are no more than 2 lanes in each direction.
- Sign posts:
  - -Signs measuring 10 square feet or less shall be mounted on 1 rigid post
  - -Signs over 10 square feet shall be mounted on 2 rigid posts
  - -Signs over 20 square feet shall be mounted on at least 3 rigid posts
- Rigid sign supports shall be driven to a minimum depth of 3 feet. (If splicing is required, see Allowable Lap Splice U-channel Post.)
- For sign height, see the Rural and Urban diagrams:

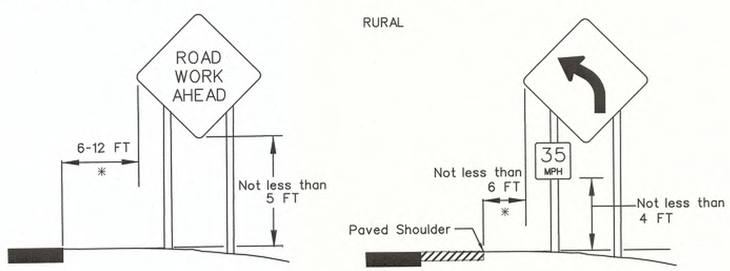

* If lateral distance is not practical, the sign may be placed no less than 2 feet.

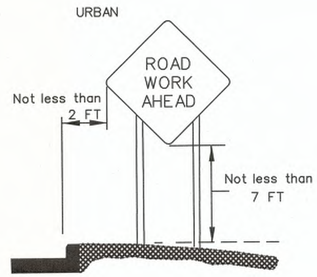

LANE CLOSURES

- All proposed lane, road or shoulder closures shall be reviewed by the DTOE and approved by the Engineer.
- Two lane, two-way highways shall have a maximum work area of two miles; all other roadways shall have a four mile maximum work area.
- A queue analysis shall be performed prior to approval of lane closures on all Interstates according to Section 6A.1 of the Traffic Engineering Manual.
- Closure plans and times shall be turned in to the Engineer for review according to the following:
  - (A) 5 working days minimum if traffic control plan has been approved or is contained in the plans.
  - (B) 10 working days minimum and a traffic control plan must be submitted for lane closures not addressed in the plans.
- Weekly updates to the DTOE, Project Engineer, the LADOTD TMC operator and the regional TMC operator (if applicable) will be required for all ongoing lane closures to update the closure status.
- Daily updates to the DTOE, Project Engineer and TMC operator (if applicable) will be required for all projects where active closures are in place.

FLAGGERS

- All flaggers shall be qualified.
- The contractor shall be responsible for training or assuring that all flaggers are qualified to perform flagging duties.
- A Qualified Flagger is one that has completed courses such as those offered by ATSSA or other courses approved by the LADOTD Work Zone Task Force. The contractor shall be responsible for getting the flagger course approved.
- When utilized, a flagger shall use a minimum 18 inch octagonal shape sign on a minimum 6 foot stop/slow paddle and wear ANSI Class 2 Lime Green vest during day time operations and ANSI Class 3 Lime Green ensemble during night operations.
- In all flagging operations, the flagger must be visible from the flagger advance warning sign.
- Flaggers shall not be used on the Interstate.

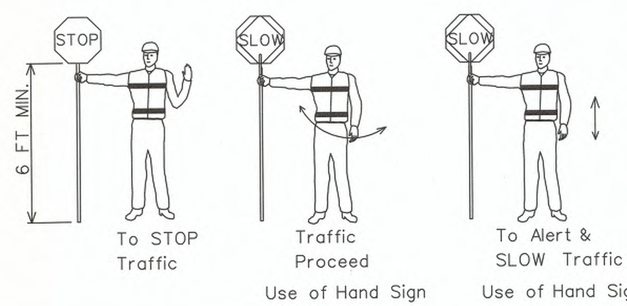

STATE OF LOUISIANA
GARY N. LeBLANC
REG. No. 28220
REGISTERED PROFESSIONAL ENGINEER IN CIVIL ENGINEERING
6-27-18

PEDESTRIAN CONSIDERATIONS

- If the TTC zone affects the movement of pedestrians, adequate pedestrian access and walkways shall be provided either through the TTC zone or a designated alternate route.
- Pedestrians should be provided with a convenient and accessible path that replicates as nearly as practical the most desirable characteristics of the existing sidewalk(s) or footpath(s).
- Advance notification of sidewalk closures shall be provided by the maintaining agency.

REFERENCES

- The contractor shall be responsible for understanding all rules and requirements in the current edition of the following documents:

1) Louisiana Standard Specifications for Roads and Bridges. http://www.dotd.la.gov/highways/specifications/

2) Manual on Uniform Traffic Control Devices for Streets and Highways (MUTCD). http://mutcd.fhwa.dot.gov/

3) LADOTD Approved Materials List (AML) Manual. http://wwwsp.dotd.la.gov/Inside_LaDOTD/Divisions/Engineering/Materials_Lab/Pages/Menu_QPL.aspx

4) LADOTD Traffic Engineering Manual http://wwwsp.dotd.la.gov/Inside_LaDOTD/Divisions/Engineering/Traffic_Engineering/Misc%20Documents/Traffic%20Engineering%20Manual.pdf

5) National Cooperative Highway Research Program (NCHRP) Report 350: "Guidelines for Work Zones Traffic Control Devices". http://onlinepubs.trb.org/Onlinepubs/nchrp/nchrp_rpt_350-a.pdf

6) NCHRP Report 475: "A Procedure for Assessing and Planning Nighttime Highway Construction and Maintenance". http://onlinepubs.trb.org/Onlinepubs/nchrp/nchrp_rpt_475.pdf

7) NCHRP Report 476: "Guidelines for Design and Operation of Nighttime Traffic Control for Highway Maintenance". http://onlinepubs.trb.org/Onlinepubs/nchrp/nchrp_rpt_476.pdf

8) NCHRP Report 498: "Illumination Guidelines for Nighttime Highway Work". http://onlinepubs.trb.org/Onlinepubs/nchrp/nchrp_rpt_498.pdf

9) American Association of State Highway and Transportation Officials (AASHTO) Roadside Design Guide.

10) American Traffic Safety Services Association (ATSSA) Quality Guidelines for Work Zone Traffic Control Devices and Features.

11) U.S. Department of Transportation Federal Highway Administration Traffic Control Handbook for Mobile Operations at Night. http://www.dot.state.il.us/blr/1023.pdf

ALL TTC STANDARDS SHOW MINIMUM CONSTRUCTION SIGNING.
ALL SITUATIONS SHALL BE REVIEWED AND/OR DESIGNED BY THE ENGINEER.
CONTRACTORS ARE RESPONSIBLE FOR COMPLYING WITH ALL TTC STANDARDS.

PARISH | CONTROL SECTION | STATE PROJECT

DESIGNED G. LEBLANC
CHECKED J. COLVIN
DETAILED C. FAKOURI
CHECKED G. LEBLANC
SERIES NUMBER

NO. | DATE | REVISION OR CHANGE ORDER DESCRIPTION | BY

APPROVED BY CHIEF ENGINEER: DATE: 7/2/18

STATE OF LOUISIANA

TEMPORARY TRAFFIC CONTROL
GENERAL NOTES SHEET

TTC-00 (B)

DOTD TRAFFIC ENGINEERING

CHANNELIZING DEVICES

- The following devices may be used as channelizing devices: Tubular Markers, Vertical Panels, Cones, Drums and Super Cones.
- 28 inch traffic cones are not allowed on:
  1) Interstates
  2) Highways with speeds greater than 40 mph.
- During nighttime operations, 28 inch and 36 inch cones are not allowed.
- Retroreflective material pattern used on super cones shall match that used on drums.

- Tangent Areas:
  A) Standard Spacing: See Standard Device Spacing and Buffer Space table.
  B) Daylight Operations: Drums and super cones are spaced at standard spacing. All other devices are at 1/2 standard spacing.
  C) Nighttime Operations: Drums and supercones at standard spacing are the only devices allowed.

- Taper Areas:
  A) Standard Spacing: See Standard Device Spacing and Buffer Space table.
  B) Daylight Operations: Drums are spaced at standard spacing. All other devices are 1/2 standard spacing.
  C) Nighttime Operations: Drums (at standard spacing) are the only devices allowed.
- Type C steady burn lights shall be used on all channelizing devices in the taper as well as the first two devices in the tangent at night, (see the AML).
- Typical channelizing device lateral placement (do not include when it is used as a divider for opposing directions of traffic) shall be 2 feet off the lane line in the closed lane or shoulder.
- Devices may be adjusted laterally to accomodate ongoing work in the immediate vicinity but must be returned to the closed lane after the work activity has moved.
- Channelizing devices on the lane line shall be of the same type.
- Channelizing devices in each taper shall be of the same type.

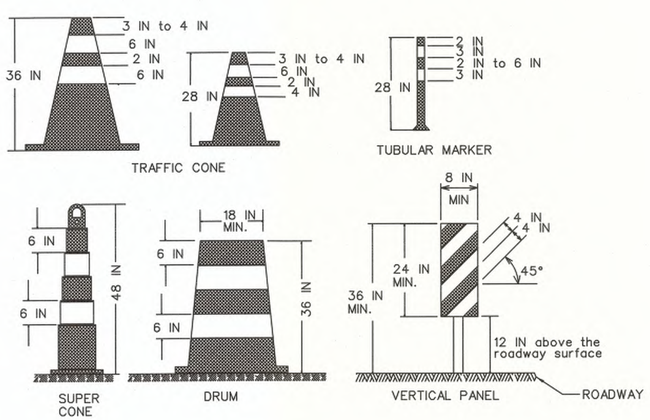

ALL TTC STANDARDS SHOW MINIMUM CONSTRUCTION SIGNING.
ALL SITUATIONS SHALL BE REVIEWED AND/OR DESIGNED BY THE ENGINEER.
CONTRACTORS ARE RESPONSIBLE FOR COMPLYING WITH ALL TTC STANDARDS.

TYPE III BARRICADES

- Only Type III Barricades shall be used.
- All barricades shall use Type 3 High Intensity Sheeting on both sides of the barricade.
- All barricades shall be a minimum of 8 feet in length and must meet NCHRP Report 350 or MASH requirements.
- When used for overnight closures, two Type B High Intensity Lights shall supplement all barricades that are placed in a closed lane or that extend across a highway. Two Type A Low Intensity Lights may be used in urban areas if approved by the Engineer (See AML).
- When signs and lights are to be mounted to a barricade, they must meet NCHRP Report 350 or MASH requirements.
- A truck with a TMA may be substituted for a barricade when workers are present.
- Barricades shall be placed:
  (A) at the beginning of a closed lane or shoulder and at 1,000 foot intervals where no active work is ongoing and the lane must remain closed. A minimum of 2 barricades shall be placed if the lane or shoulder closure is less than 2,000 feet. (One barricade shall be placed at the beginning of the lane closure after the buffer space and one shall be placed in the middle of the lane closure.)
  (B) before each or group of unfilled holes or holes filled with temporary material.
  (C) before uncured concrete.
  (D) in the closed lane on each side of every intersection and crossover. (Do not block sight distance.)
  (E) in front of piles of material (dirt, aggregate, broken concrete), culverts and equipment which is near the work zone.

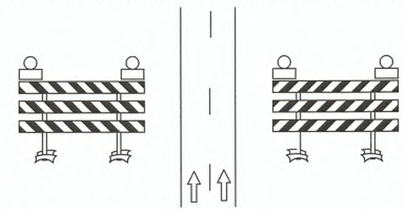

TTC for DROP-OFFS

NON-INTERSTATE

Average Drop-off	Current Posted Speed (Prior to Construction)	
	> 45 MPH	≤ 45 MPH
≤ 3 IN	Low Shoulder Sign (Optional)	Low Shoulder Sign (Optional)
> 3 IN ≤ 6 IN	Shoulder Drop Off Sign & Edge Lines or Shoulder Drop Off Sign & Channelizing Device	Shoulder Drop Off Sign
> 6 IN ≤ 10 IN	No Shoulder Sign, Edge Lines & Vertical Panel	No Shoulder Sign & Channelizing Device
> 10 IN	Concrete Barrier (if drop off is < 12 FT from edge of travel lane) & Edge Lines	No Shoulder Sign & Vertical Panel

INTERSTATE

Average Drop-off	
≤ 2 IN	Low Shoulder Sign (Optional)
> 2 IN ≤ 6 IN	Shoulder Drop Off Sign & Edge Lines or Shoulder Drop Off Sign & Channelizing Device
> 6 IN	Concrete Barrier (if drop off is < 12 FT from edge of travel lane), Shoulder Drop Off Sign, & Edge Lines

- If a portable concrete barrier will be required then the deflection shall be considered in the design.
- For Interstate ramps, refer to non-Interstate drop offs.

STATE OF LOUISIANA
GARY N. LeBLANC
REG. No 28220
REGISTERED PROFESSIONAL ENGINEER IN CIVIL ENGINEERING
6-27-18

STANDARD DEVICE SPACING AND BUFFER SPACE

SPEED LIMIT (prior to construction)	MERGING TAPER LENGTH (L) Lane Width (FT)				STANDARD DEVICE SPACING IN FEET		BUFFER SPACE
MPH	9	10	11	12	Along Taper	Along Tangent	FT
25	94	105	115	125	20	40	155
30	135	150	165	180	30	60	200
35	184	205	225	245	35	70	250
40	240	267	294	320	40	80	305
45	405	450	495	540	40	80	360
50	450	500	550	600	40	80	425
55	495	550	605	660	40	80	495
60	540	600	660	720	40	80	570
65	585	650	715	780	40	80	645
70	630	700	770	840	40	80	730
75	675	750	825	900	40	80	820

SPEED LIMIT (prior to construction)	SHIFTING TAPER LENGTH (1/2)(L) Lane Shift (FT)						STANDARD DEVICE SPACING IN FEET		BUFFER SPACE
MPH	2	4	6	8	10	12	Along Taper	Along Tangent	FT
25	11	21	32	42	52	63	20	40	155
30	15	30	45	60	75	90	30	60	200
35	21	41	62	82	102	123	35	70	250
40	27	54	80	107	134	160	40	80	305
45	45	90	135	180	225	270	40	80	360
50	50	100	150	200	250	300	40	80	425
55	55	110	165	220	275	330	40	80	495
60	60	120	180	240	300	360	40	80	570
65	65	130	195	260	325	390	40	80	645
70	70	140	210	280	350	420	40	80	730
75	75	150	225	300	375	450	40	80	820

SPEED LIMIT (prior to construction)	SHOULDER TAPER LENGTH (1/3)(L) Shoulder Width (FT)						STANDARD DEVICE SPACING IN FEET		BUFFER SPACE
MPH	2	4	6	8	10	12	Along Taper	Along Tangent	FT
25	7	14	21	28	35	42	20	40	155
30	10	20	30	40	50	60	30	60	200
35	14	28	41	55	68	82	35	70	250
40	18	36	54	72	89	107	40	80	305
45	30	60	90	120	150	180	40	80	360
50	34	67	100	134	167	200	40	80	425
55	37	74	110	147	184	220	40	80	495
60	40	80	120	160	200	240	40	80	570
65	44	87	130	174	217	260	40	80	645
70	47	94	140	187	234	280	40	80	730
75	50	100	150	200	250	300	40	80	820

- All termination and flagger tapers are 100 feet. (MIN. 6 channelizing devices per lane equally spaced 20 feet apart.)
- See TTC Standards for flagger taper.
- See MUTCD for taper formulas.

- ALLOWABLE LAP SPLICE FOR U-CHANNEL POST

U-Channel posts may be spliced where long lengths are required. The upper section shall overlap the lower section by at least 24 inches. The bottom edge of the upper section of the splice shall be a minimum of 24 inches above the ground. The spliced sections shall be secured with at least four 5/16 inch diameter hex bolts spaced equally along the splice.

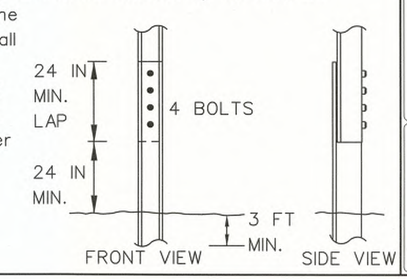

SHEET NUMBER 237

PARISH | CONTROL SECTION | STATE PROJECT

DESIGNED G. LEBLANC
CHECKED J. COLVIN
DETAILED C. FAKOURI
CHECKED G. LEBLANC
SERIES NUMBER

NO.	DATE	REVISION OR CHANGE ORDER DESCRIPTION	BY

APPROVED BY CHIEF ENGINEER
DATE: 7/2/18

STATE OF LOUISIANA

TEMPORARY TRAFFIC CONTROL
GENERAL NOTES SHEET

TTC-00 (C)

DOTD TRAFFIC ENGINEERING

SEE TTC-00(A), TTC-00(B), AND TTC-00(C)

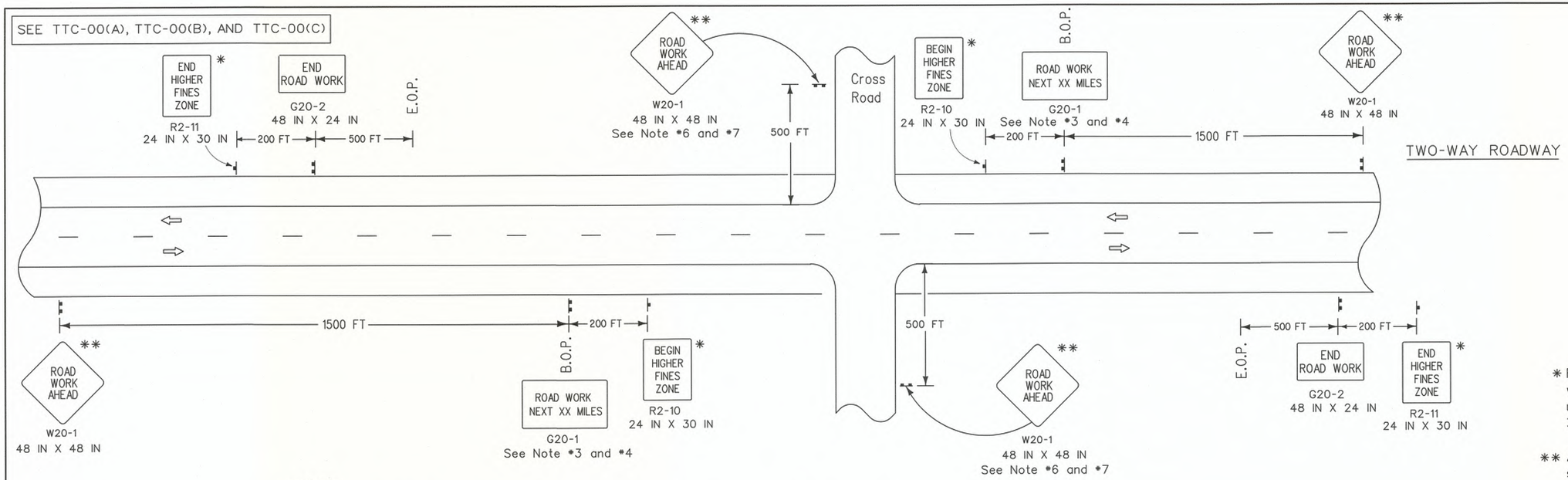

* For divided roadways with speeds ≥ 50 mph use larger sign, 36 IN X 48 IN.

** Any sign of the W20-1 series may be used.

NOTES

This sheet shall be used with the Temporary Traffic Control General Notes Sheets TTC-00(A), TTC-00(B), TTC-00(C), and other Temporary Traffic Control Sheets as appropriate.

1. This layout represents the minimum traffic controls required for placement of "Road Work Next XX Miles" and "End Road Work" signs.
2. This layout does not replace other TTC Standard Sheets, but is intended as a supplement to the required signing.
3. The distance on the "Road Work Next XX Miles" sign shall be stated to the nearest whole mile. This sign shall be placed at the Beginning of Project (B.O.P.) limits. This sign may be omitted if work zone is less than 0.5 miles.
4. The "Road Work Next XX Miles" sign shall be a minimum of 60 inches by 36 inches for all multi-lane roadways and a minimum of 48 inches by 24 inches for two-lane roadways unless otherwise noted.
5. The "End Road Work" sign shall be placed 500 feet past the End of Project (E.O.P.) limits.
6. If "Road Work Ahead" sign is used on a cross road to warn of road work on another route, then "End Road Work" sign is not required.
7. When projects are separated by less than 1 mile, they shall be signed as one project; this may require coordination.

LEGEND

- Traffic Sign
- Direction of Travel

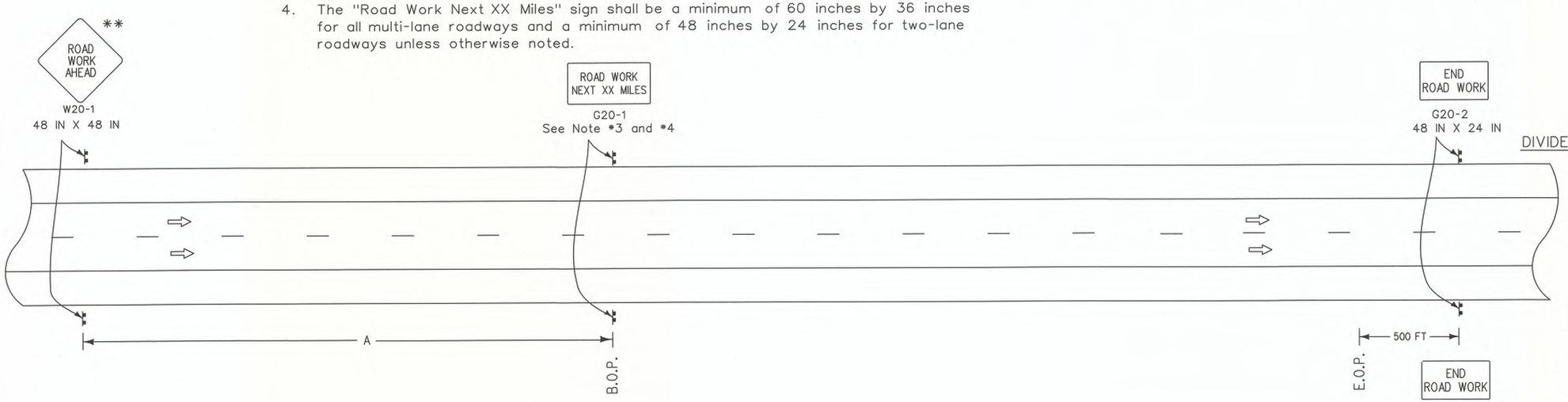

SPEED LIMIT (prior to construction)	SPACING 'A'
≤ 40 mph	1500 FT
45 mph	2640 FT
> 45 mph	5280 FT

- Sign spacing to be adjusted for Horizontal and Vertical curves.
- For work outside of the traveled way, see TTC-01 and TTC-02.

ALL TTC STANDARDS SHOW MINIMUM CONSTRUCTION SIGNING.
ALL SITUATIONS SHALL BE REVIEWED AND/OR DESIGNED BY THE ENGINEER.
CONTRACTORS ARE RESPONSIBLE FOR COMPLYING WITH ALL TTC STANDARDS.

STATE OF LOUISIANA
GARY N. LeBLANC
REG. No. 26220
REGISTERED PROFESSIONAL ENGINEER IN CIVIL ENGINEERING
6-27-18

SHEET NUMBER 238

PARISH | CONTROL SECTION | STATE PROJECT

DESIGNED G. LEBLANC
CHECKED J. COLVIN
DETAILED C. FAKOURI
CHECKED G. LEBLANC
SERIES NUMBER

NO. | DATE | REVISION OR CHANGE ORDER DESCRIPTION | BY

APPROVED BY CHIEF ENGINEER: DATE: 7/2/18

STATE OF LOUISIANA

TEMPORARY TRAFFIC CONTROL
LAYOUT FOR PLACEMENT OF ROAD WORK NEXT XX MILES AND END ROAD WORK SIGNS

TTC-00 (D)

DOTD TRAFFIC ENGINEERING

SEE TTC-00(A), TTC-00(B), TTC-00(C), AND TTC-00(D)

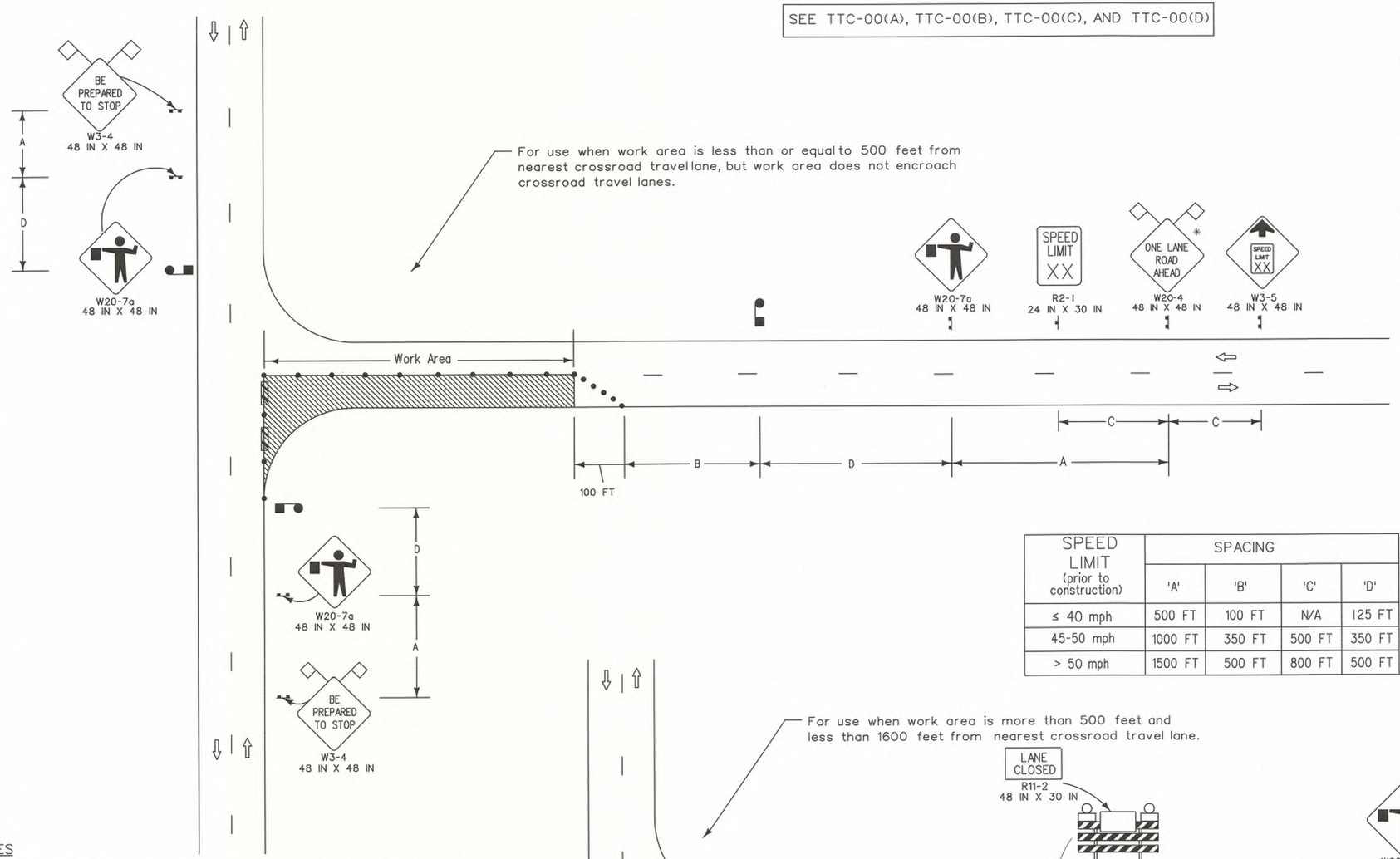

SPEED LIMIT (prior to construction)	SPACING			
	'A'	'B'	'C'	'D'
≤ 40 mph	500 FT	100 FT	N/A	125 FT
45-50 mph	1000 FT	350 FT	500 FT	350 FT
> 50 mph	1500 FT	500 FT	800 FT	500 FT

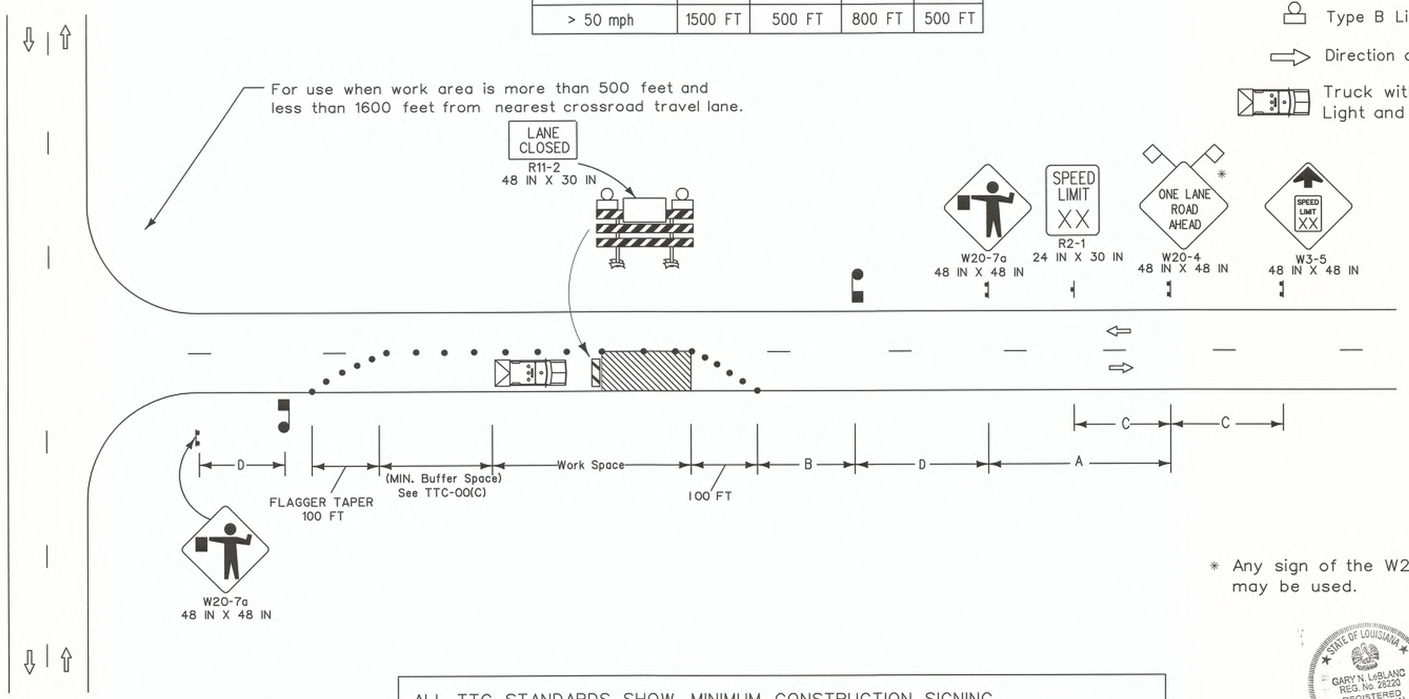

PILOT CAR

- If used, a pilot car shall guide a queue of vehicles through the work zone or diversion.
- It shall be used in restricted visibility operations such as lime or cement stabilization, chip seals, or operations in hilly or curvy terrains, where flaggers cannot see each other (no clear line-of-sight).
- The operation of the pilot vehicle shall be coordinated with flagging operations or other controls at each end of the one-lane section and all major driveways and street intersections.
- The pilot car sign should be mounted 7 feet above roadway in a position visible to oncoming and following traffic.
- The pilot car shall have an amber beacon light.
- The sign mounted on the vehicle shall be two-sided.

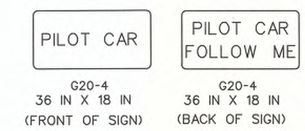

LEGEND

- Traffic Sign
- Channelizing Devices
- Type III Barricades
- Work Area
- Flagger
- Type B Light
- Direction of Travel
- Truck with Amber Light and TMA

NOTES

This sheet shall be used with the Temporary Traffic Control General Notes Sheets TTC-00(A), TTC-00(B), TTC-00(C), and TTC-00(D).

1. This layout represents the minimum traffic controls required for lane closures on two-lane roads with two-way traffic less than 1600 feet from an intersection. For advance signing see TTC-00(D).
2. Visual or radio contact shall be required between flaggers at all times. The flagger shall be visible from flagger sign.
3. Only law officers shall direct traffic against a traffic signal indication.
4. If work area is greater than 1600 feet see TTC-04.
5. If a pilot car is required then the contractor is not required to have channelizing devices in the tangent section.
6. A vehicle with a flashing amber light and a truck mounted attenuator shall be used on all roadways with an ADT greater than 20,000 and a pre-construction speed greater than or equal to 40 mph. This vehicle shall move with work operations not to exceed the roll-ahead distance required by the manufacturer plus 100 feet.

* Any sign of the W20-4 series may be used.

ALL TTC STANDARDS SHOW MINIMUM CONSTRUCTION SIGNING.
ALL SITUATIONS SHALL BE REVIEWED AND/OR DESIGNED BY THE ENGINEER.
CONTRACTORS ARE RESPONSIBLE FOR COMPLYING WITH ALL TTC STANDARDS.

STATE OF LOUISIANA
GARY N. LeBLANC
REG. No. 28220
REGISTERED PROFESSIONAL ENGINEER IN CIVIL ENGINEERING
6-27-18

SHEET NUMBER 239

DESIGNED G. LEBLANC	DETAILED C. FAKOURI	SERIES NUMBER	PARISH	CONTROL SECTION	STATE PROJECT
CHECKED J. COLVIN	CHECKED G. LEBLANC				

NO.	DATE	REVISION OR CHANGE ORDER DESCRIPTION	BY

APPROVED BY CHIEF ENGINEER: DATE: 7/2/18

TEMPORARY TRAFFIC CONTROL

LAYOUT FOR LANE CLOSURES ON TWO LANE ROADS WITH TWO-WAY TRAFFIC NEAR INTERSECTIONS (FLAGGING OPERATIONS)

TTC-03

DOTD TRAFFIC ENGINEERING

SEE TTC-00(A), TTC-00(B), TTC-00(C), AND TTC-00(D)

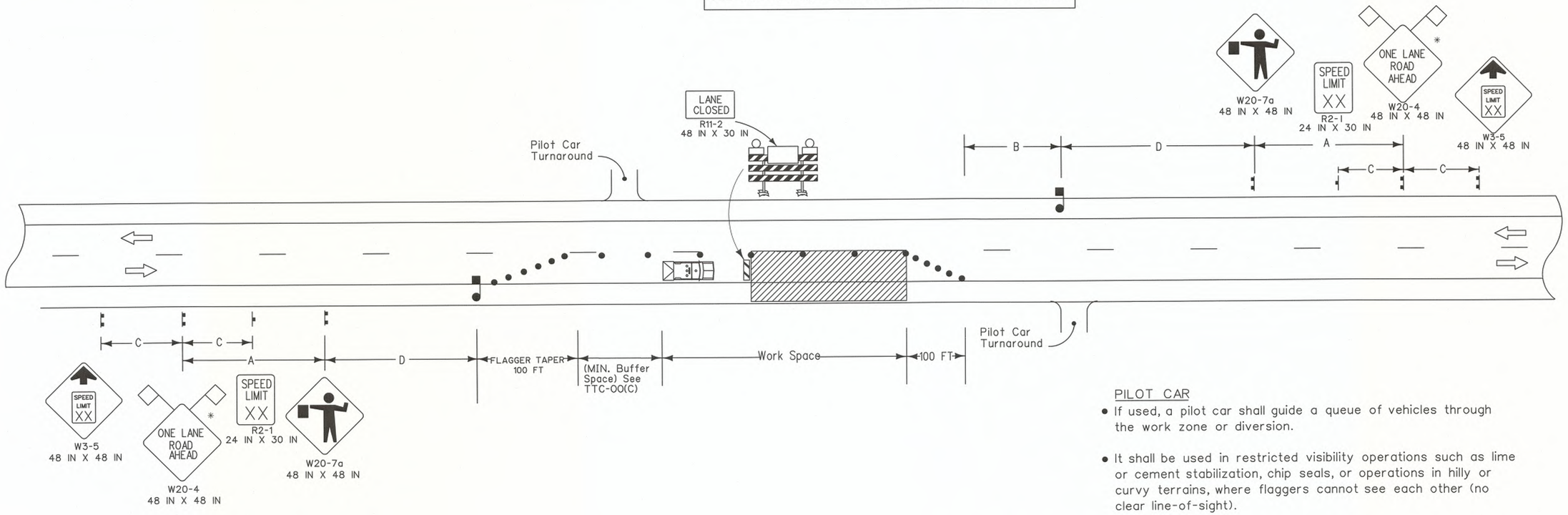

NOTES

This sheet shall be used with the Temporary Traffic Control General Notes Sheets TTC-00(A), TTC-00(B), TTC-00(C) and TTC-00(D).

1. This layout represents the minimum traffic controls required for lane closures on two-lane roads with two-way traffic greater than 1600 feet from an intersection. For this type of closure either a flagger or a pilot car will be required. For advance signing see TTC-00(D).

2. To prevent vehicles from entering the work area against the flow of traffic, an additional flagger shall be stationed at each intersection, major driveway, railroad crossing, or crossing within the work area.

3. For projects in rural areas the distance between flaggers shall not exceed:
   (A) 2.5 miles for ADT<2,500
   (B) 2.0 miles for 2,500<ADT<5,000
   (C) 1.5 miles for ADT>5,000

4. The flagger station shall be near the beginning of the taper and shall have adequate sight distance to be visible to oncoming traffic. If sight distance cannot be achieved, the distance between flaggers may be extended for a short duration.

5. Visual or radio contact shall be required between flaggers at all times. The flagger shall be visible from the flagger sign.

6. A vehicle with a flashing amber light and a truck mounted attenuator shall be used on all roadways with an ADT greater than 20,000 and a pre-construction speed greater than or equal to 40 mph. This vehicle shall move with work operations not to exceed the roll-ahead distance required by the manufacturer plus 100 feet.

7. If a pilot car is required then the contractor is not required to have channelizing devices in the tangent section.

8. If work zone is less than 1600 feet from an intersection see TTC-03.

SPEED LIMIT (prior to construction)	SPACING			
	'A'	'B'	'C'	'D'
≤ 40 mph	500 FT	100 FT	N/A	125 FT
45-50 mph	1000 FT	350 FT	500 FT	350 FT
≥ 55 mph	1500 FT	500 FT	800 FT	500 FT

ALL TTC STANDARDS SHOW MINIMUM CONSTRUCTION SIGNING.
ALL SITUATIONS SHALL BE REVIEWED AND/OR DESIGNED BY THE ENGINEER.
CONTRACTORS ARE RESPONSIBLE FOR COMPLYING WITH ALL TTC STANDARDS.

PILOT CAR

- If used, a pilot car shall guide a queue of vehicles through the work zone or diversion.
- It shall be used in restricted visibility operations such as lime or cement stabilization, chip seals, or operations in hilly or curvy terrains, where flaggers cannot see each other (no clear line-of-sight).
- The operation of the pilot vehicle shall be coordinated with flagging operations or other controls at each end of the one-lane section and all major driveways and street intersections.
- The pilot car sign should be mounted 7 feet above roadway in a position visible to oncoming and following traffic.
- The pilot car shall have an amber beacon light.
- The sign mounted on the vehicle shall be two-sided.

PILOT CAR
G20-4
36 IN X 18 IN
(FRONT OF SIGN)

PILOT CAR FOLLOW ME
G20-4
36 IN X 18 IN
(BACK OF SIGN)

* Any sign of the W20-4 series may be used.

LEGEND

- Traffic Sign
- Flagger
- Channelizing Devices
- Type III Barricades
- Work Area
- Type B Light
- Direction of Travel
- Truck with Amber Light and TMA

STATE OF LOUISIANA
GARY N. LeBLANC
REG. No. 26220
REGISTERED PROFESSIONAL ENGINEER IN CIVIL ENGINEERING
6-27-18

SHEET NUMBER	240		
PARISH	CONTROL SECTION	STATE PROJECT	
DESIGNED G. LEBLANC	DETAILED C. FAKOURI	SERIES NUMBER	
CHECKED J. COLVIN	CHECKED G. LEBLANC		

NO.	DATE	REVISION OR CHANGE ORDER DESCRIPTION	BY

APPROVED BY CHIEF ENGINEER: DATE: 7/2/18

TEMPORARY TRAFFIC CONTROL
LAYOUT FOR LANE CLOSURES ON TWO LANE ROADS WITH TWO-WAY TRAFFIC (FLAGGING OPERATIONS)

TTC-04

DOTD TRAFFIC ENGINEERING

SEE TTC-00(A), TTC-00(B), AND TTC-00(C)

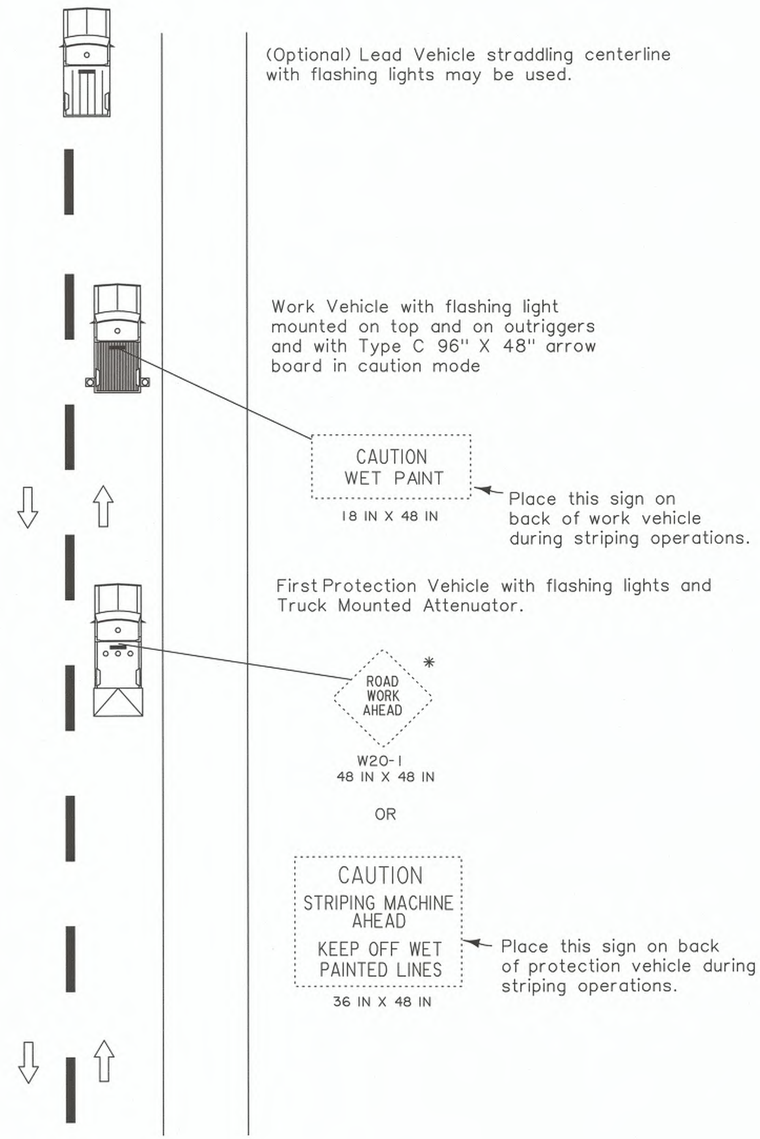

NOTES

This sheet shall be used with the Temporary Traffic Control General Notes Sheets TTC-00(A), TTC-00(B), and TTC-00(C).

1. This layout represents the minimum traffic controls required for moving operations on two-lane roads with two-way traffic, such as striping, street sweeping, and placement of raised pavement markers.

2. Distances between vehicles may vary and should be adjusted due to drying time and sight obstructions such as overpasses and hills. Vehicles with attenuators shall move with work operations. Buffer space shall not exceed rollahead distance required by the manufacturer plus 100 feet.

3. If a queue greater than 5 minutes (about 1000 feet) exists, the contractor shall cease operations and pull over to the shoulder until the queue dissipates.

4. Flaggers may be used with this layout, if needed. See TTC-00(B).

ALL TTC STANDARDS SHOW MINIMUM CONSTRUCTION SIGNING.
ALL SITUATIONS SHALL BE REVIEWED AND/OR DESIGNED BY THE ENGINEER.
CONTRACTORS ARE RESPONSIBLE FOR COMPLYING WITH ALL TTC STANDARDS.

* Any sign of the W20-1 series may be used.

LEGEND

⇨ Direction of Travel

Work Vehicle

Lead Vehicle

Protection Vehicle

STATE OF LOUISIANA
GARY N. LeBLANC
REG. No. 28220
REGISTERED PROFESSIONAL ENGINEER IN CIVIL ENGINEERING
6-27-18

SHEET NUMBER 241

PARISH | CONTROL SECTION | STATE PROJECT

DESIGNED G. LEBLANC
CHECKED J. COLVIN
DETAILED C. FAKOURI
CHECKED G. LEBLANC
SERIES NUMBER

NO.	DATE	REVISION OR CHANGE ORDER DESCRIPTION	BY

APPROVED BY CHIEF ENGINEER: DATE: 7/2/18

TEMPORARY TRAFFIC CONTROL
FOR MOVING OPERATIONS ON TWO-WAY TWO-LANE ROADWAYS

TTC-18

DOTD TRAFFIC ENGINEERING

SEE TTC-00(A), TTC-00(B), AND TTC-00(C)

SIGNAL WORK ON A MULTI-LANE ROADWAY FOR UP TO ONE HOUR

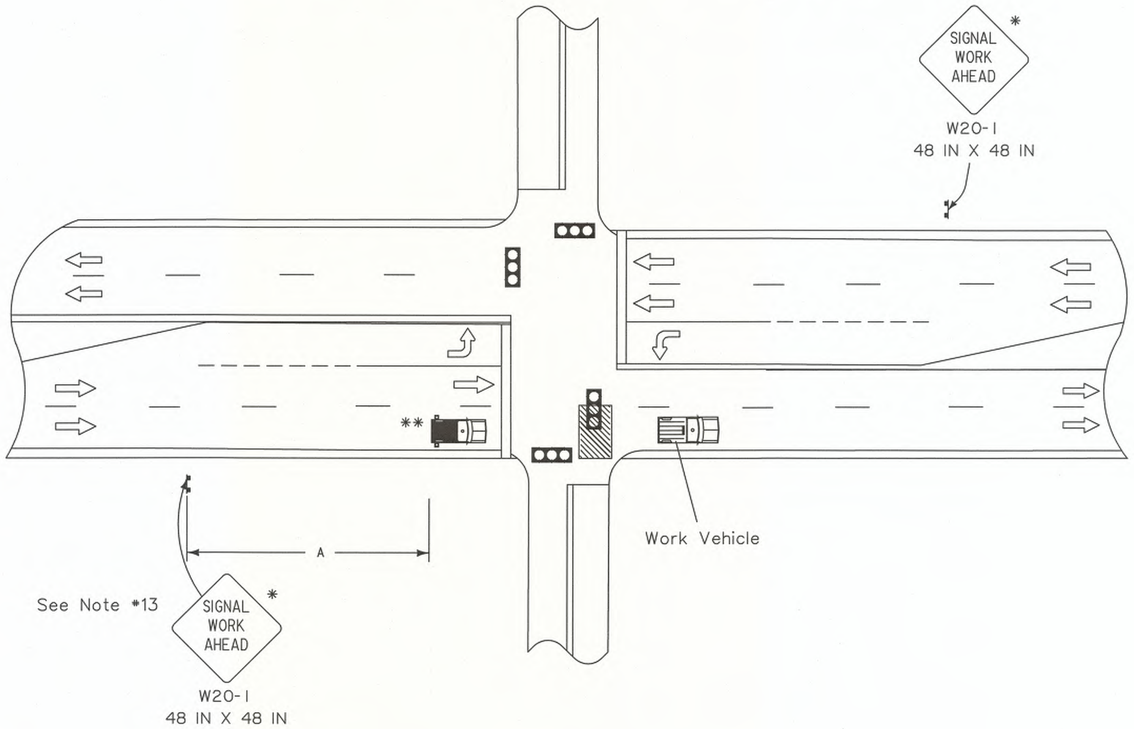

SIGNAL WORK ON A TWO-LANE TWO-WAY ROADWAY

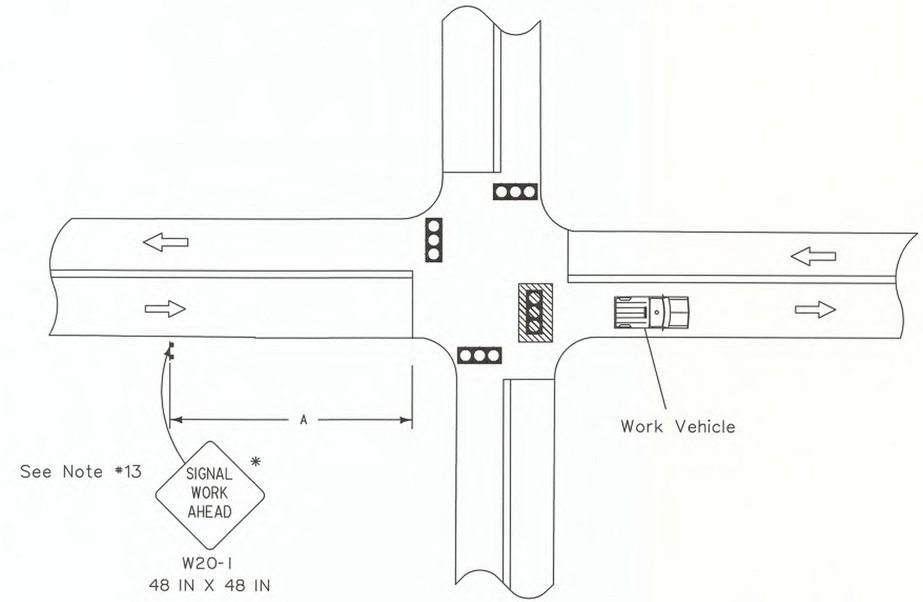

* Any sign of the W20-1 series may be used.

** For posted speed over 45 mph, use TMA.

SPEED LIMIT (prior to construction)	SPACING
	'A'
≤ 40 mph	125 FT
45-50 mph	350 FT
> 50 mph	500 FT

NOTES

This sheet shall be used with the Temporary Traffic Control General Notes Sheets TTC-00(A), TTC-00(B), and TTC-00(C).

1. This layout represents the minimum traffic controls required during signal construction and maintenance.
2. For projects with multiple signals, the contractor shall construct only one signal at a time.
3. If the signal at an intersection is turned off, the intersection may operate as a 4-way stop with approval by the Engineer and the DTOE. The contractor shall be responsible for installing and removing all stop signs at the intersection.
4. A detour plan is required if the road will be closed to through traffic at all approaches.
5. A uniformed police officer shall direct traffic for short duration lane closures and signal turn-ons.
6. The turn lane may be used as a through lane if a minimum 10-foot lateral clearance can be maintained and opposing traffic is not impeded.
7. A signal timing and phasing plan shall be developed for each phase of construction.
8. Place "Road Work Ahead" sign prior to an intersecting alternate route, no more than 1500 feet from the work area.
9. The sign height shall be at least 7 feet in business, commercial, and residential areas and also near parking, pedestrians, bicyclists, or other obstructions.
10. All work must be done during off-peak hours.
11. The contractor shall not work on both through lanes at the same time.
12. For signal work on a multi-lane roadway greater than 1 hour, see TTC-09 or TTC-10.
13. If the expected or actual queue length exceeds the distance in Table 2C-4 in the MUTCD, place an additional "Signal Work Ahead" sign (W20-1) at the end of the queue.
14. For two-lane two-way roadways, a police car with flashing lights and 2 police officers will be required for intersection traffic control.
15. Left turn lanes shall be closed whenever work is being performed in path of left hand turner.
16. Position of work vehicle may vary according to work required.

STATE OF LOUISIANA
GARY N. LeBLANC
REG. No. 26220
REGISTERED PROFESSIONAL ENGINEER IN CIVIL ENGINEERING
6-27-18

LEGEND

- Traffic Sign
- Work Vehicle
- Truck with Flashing Arrow Panel
- Work Area
- Direction of Travel
- Traffic Signal

ALL TTC STANDARDS SHOW MINIMUM CONSTRUCTION SIGNING.
ALL SITUATIONS SHALL BE REVIEWED AND/OR DESIGNED BY THE ENGINEER.
CONTRACTORS ARE RESPONSIBLE FOR COMPLYING WITH ALL TTC STANDARDS.

SHEET NUMBER 242

PARISH | CONTROL SECTION | STATE PROJECT

DESIGNED G. LEBLANC
CHECKED J. COLVIN
DETAILED C. FAKOURI
CHECKED G. LEBLANC
SERIES NUMBER

NO. | DATE | REVISION OR CHANGE ORDER DESCRIPTION | BY

APPROVED BY CHIEF ENGINEER: DATE: 7/2/18

STATE OF LOUISIANA DEPARTMENT OF TRANSPORTATION AND DEVELOPMENT

TEMPORARY TRAFFIC CONTROL
FOR TRAFFIC SIGNAL INSTALLATION AND MAINTENANCE AT AN INTERSECTION

TTC-19

DOTD TRAFFIC ENGINEERING

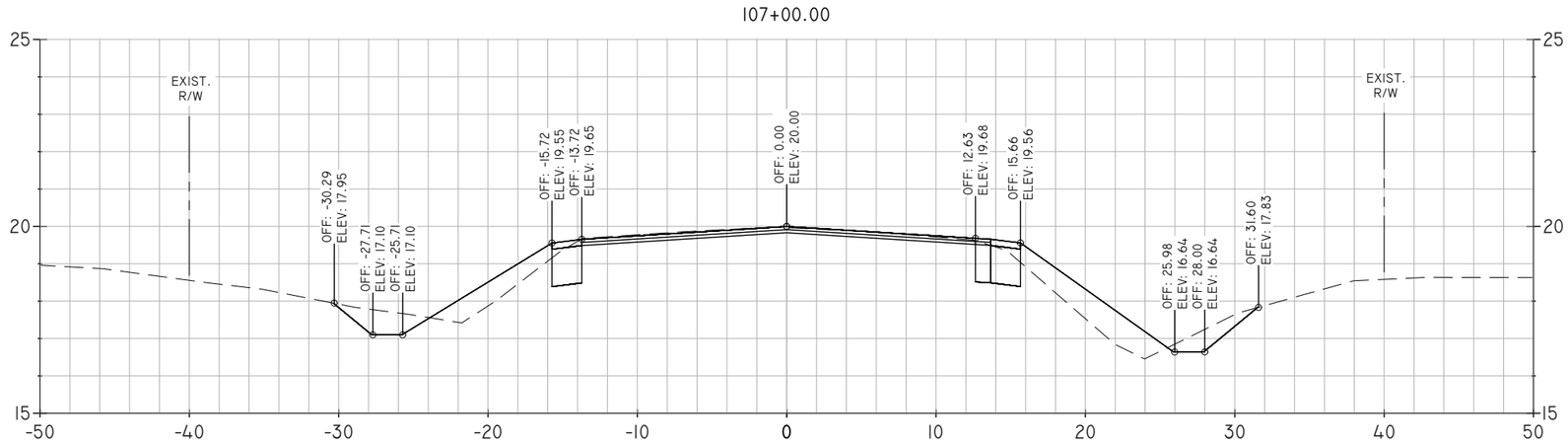

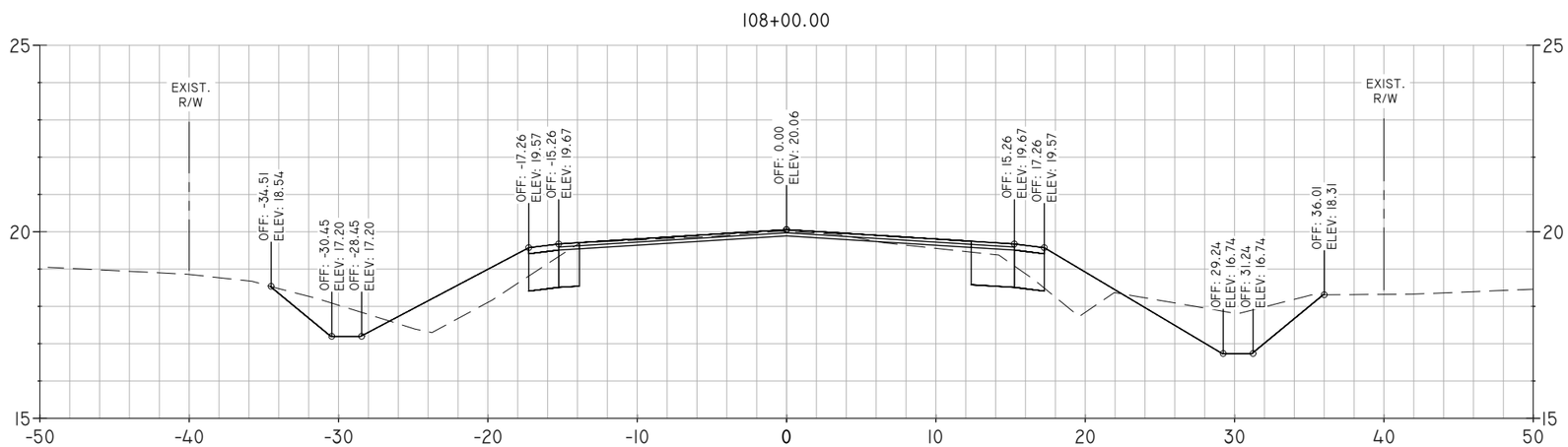

SHEET NUMBER 400

ASCENSION PARISH

PARISH	CONTROL SECTION	STATE PROJECT

DESIGNED S.J.T	DETAILED S.J.T	DATE JUNE 2024	
CHECKED D.J.M	CHECKED D.J.M	SHEET CROSS SECTIONS	

NO.	DATE	BY

CROSS SECTIONS

LA HWY 44 AT PARKER RD TEMPORARY TURN LANE

MCKIM&CREED
ENGINEERS SURVEYORS PLANNERS
(225) 644-5523
www.mckimcreed.com
1022 S. Purpera Ave.
Gonzales, LA 70707-0298

<PHILARIO> 06/25/24 8:45 AM I:\08391\0009\ENG\80-DRAWINGS\TEMP TURN LANE DESIGN\400 CROSS SECTIONS.DWG - 400 CROSS SECTIONS

109+00.00

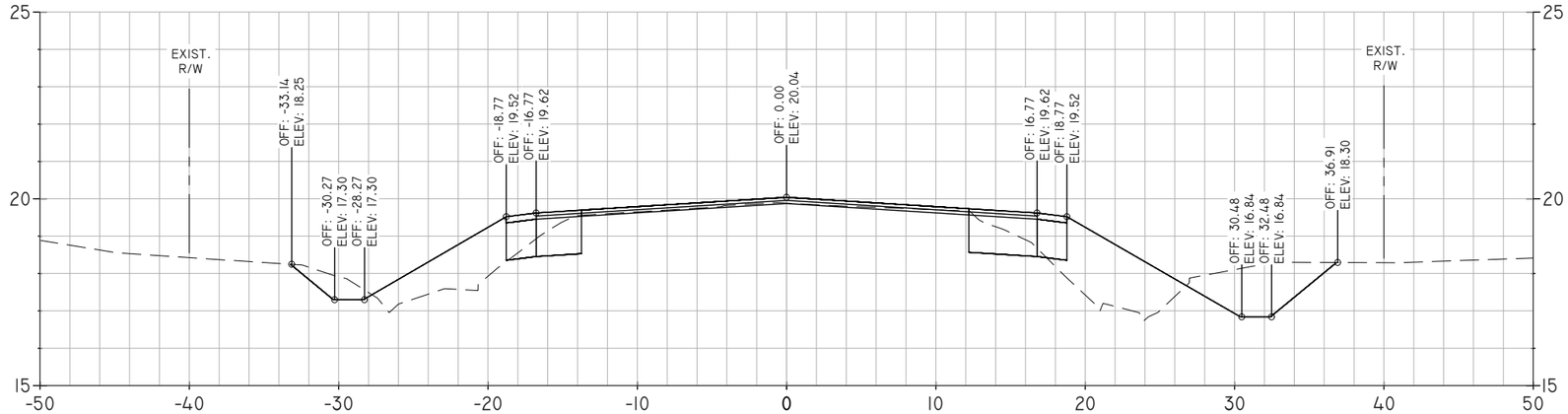

110+00.00

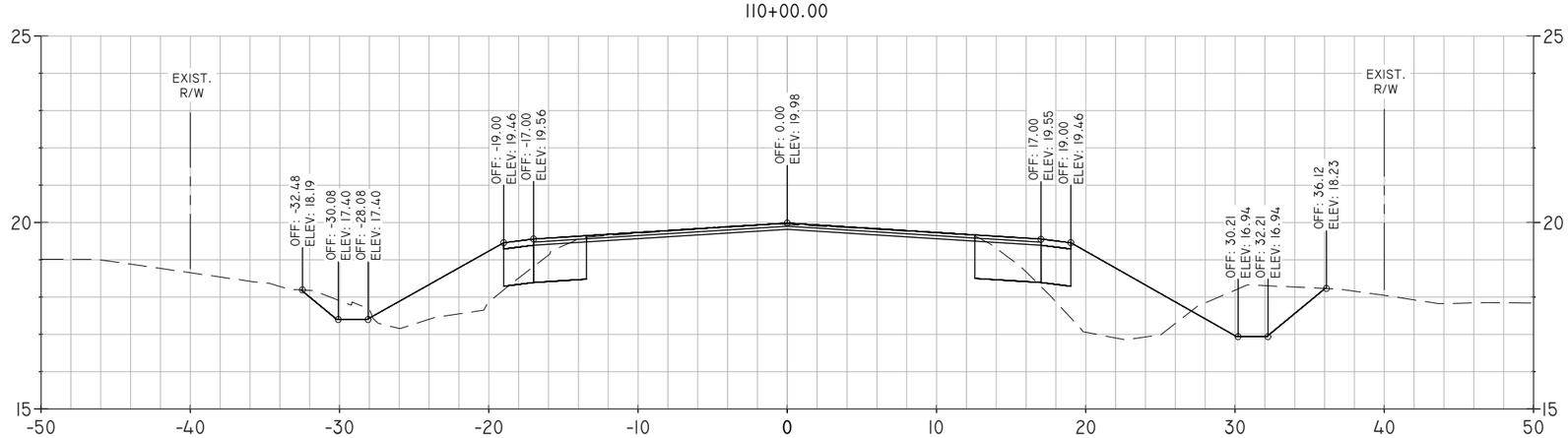

SHEET NUMBER 401

ASCENSION PARISH

PARISH	CONTROL SECTION	STATE PROJECT

DESIGNED	CHECKED	DETAILED	CHECKED	DATE	SHEET
SJT	DJM	SJT	DJM	JUNE 2024	CROSS SECTIONS

NO.	DATE	BY

CROSS SECTIONS

LA HWY 44 AT PARKER RD TEMPORARY TURN LANE

MCKIM&CREED
(225) 644-5523
www.mckimcreed.com
1022 S. Purpera Ave.
Gonzales, LA 70707-0298

<PHILARIO> 06/25/24 8:45 AM I:\08391\0009\ENG\80-DRAWINGS\TEMP TURN LANE DESIGN\400 CROSS SECTIONS.DWG - 401

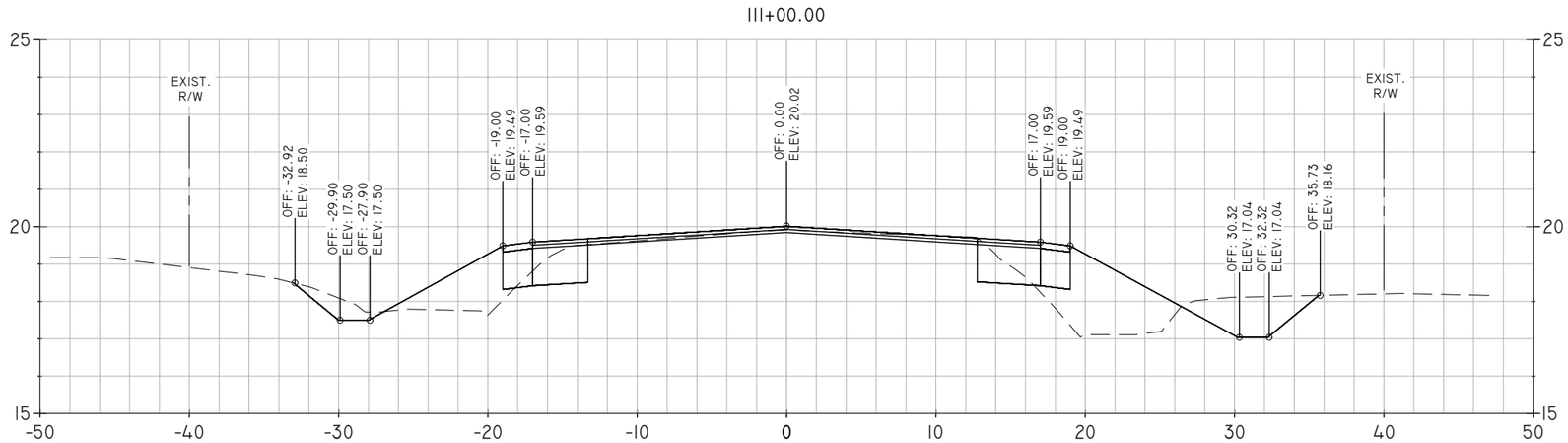

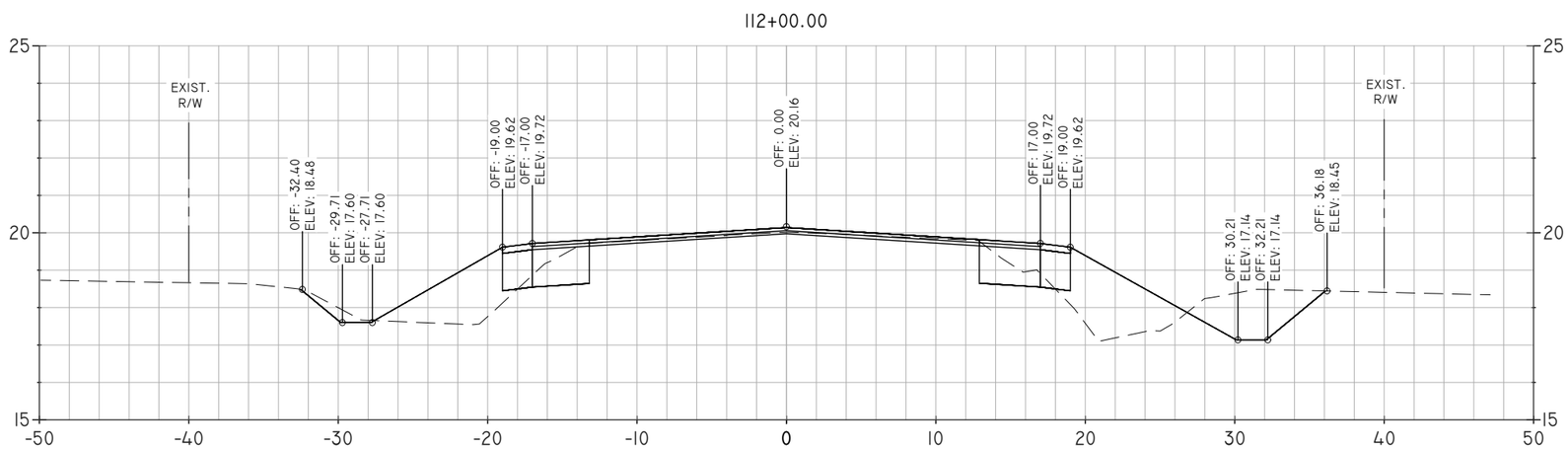

SHEET NUMBER 402

ASCENSION PARISH

PARISH	CONTROL SECTION	STATE PROJECT

DESIGNED	CHECKED	DETAILED	CHECKED	DATE	SHEET
SJT	DJM	SJT	DJM	JUNE 2024	CROSS SECTIONS

NO.	DATE	BY

CROSS SECTIONS

LA HWY 44 AT PARKER RD TEMPORARY TURN LANE

MCKIM&CREED
ENGINEERS SURVEYORS PLANNERS
(225) 644-5523
www.mckimcreed.com
1022 S. Purpera Ave.
Gonzales, LA 70707-0298

<HILARIO> 06/25/24 8:45 AM I:\08391\0009\ENG\80-DRAWINGS\TEMP TURN LANE DESIGN\400 CROSS SECTIONS.DWG - 402

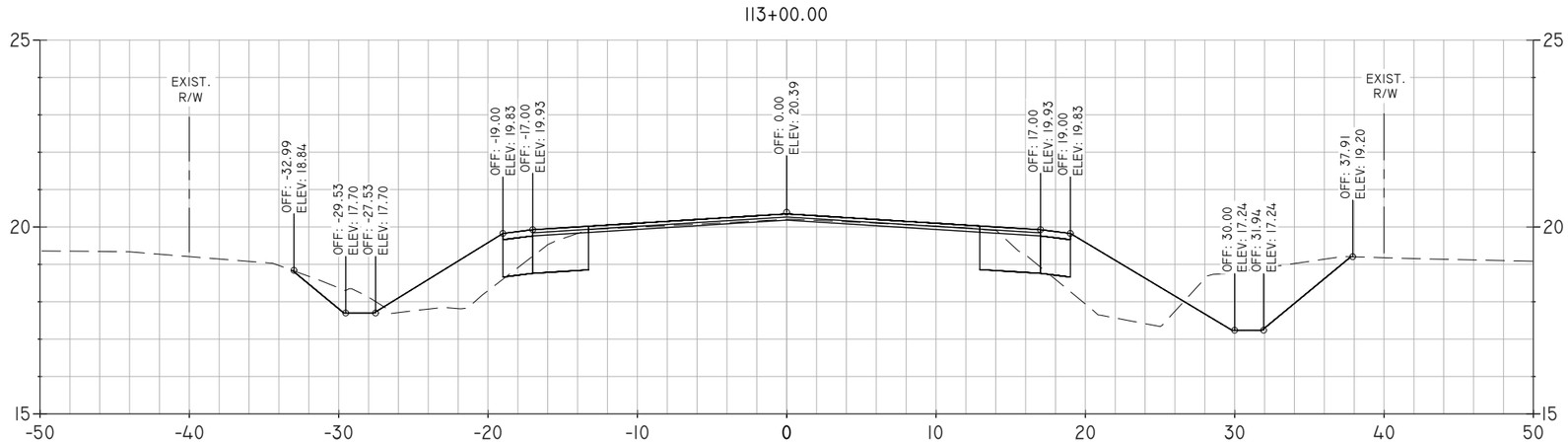

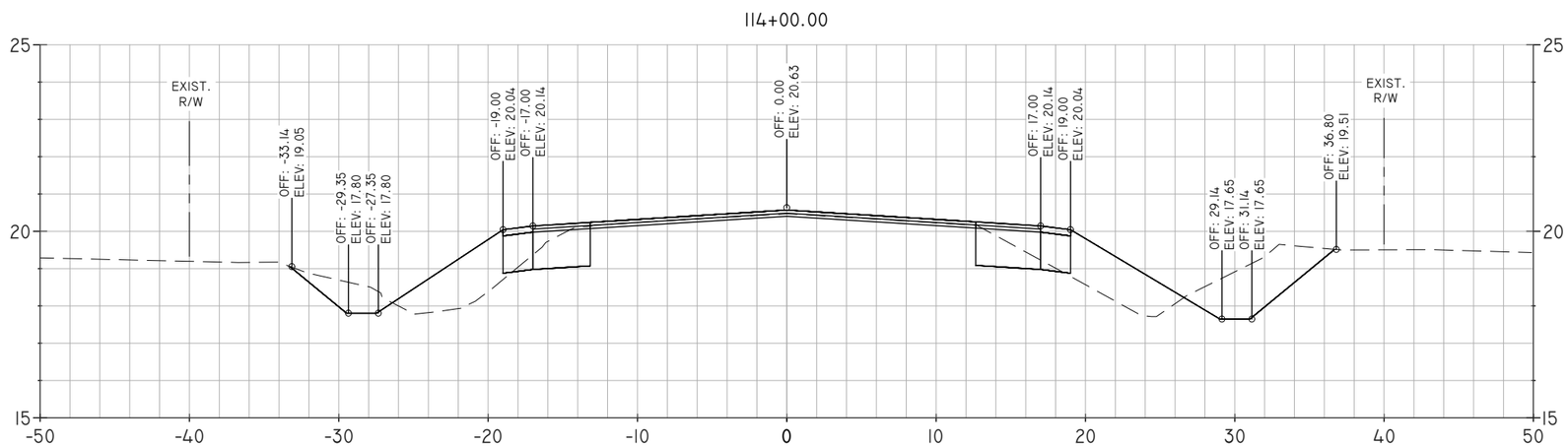

SHEET NUMBER 403

ASCENSION PARISH

PARISH	CONTROL SECTION	STATE PROJECT

DESIGNED	CHECKED	DETAILED	CHECKED	DATE	SHEET
SJT	DJM	SJT	DJM	JUNE 2024	CROSS SECTIONS

NO.	DATE	BY

CROSS SECTIONS

LA HWY 44 AT PARKER RD TEMPORARY TURN LANE

MKIM&CREED
ENGINEERS SURVEYORS PLANNERS
(225) 644-5523
www.mckimcreed.com
1022 S. Purpera Ave.
Gonzales, LA 70707-0298

<PHILARIO> 06/25/24 8:45 AM I:\08391\0009\ENG\80-DRAWINGS\TEMP TURN LANE DESIGN\400 CROSS SECTIONS.DWG - 403

115+00.00

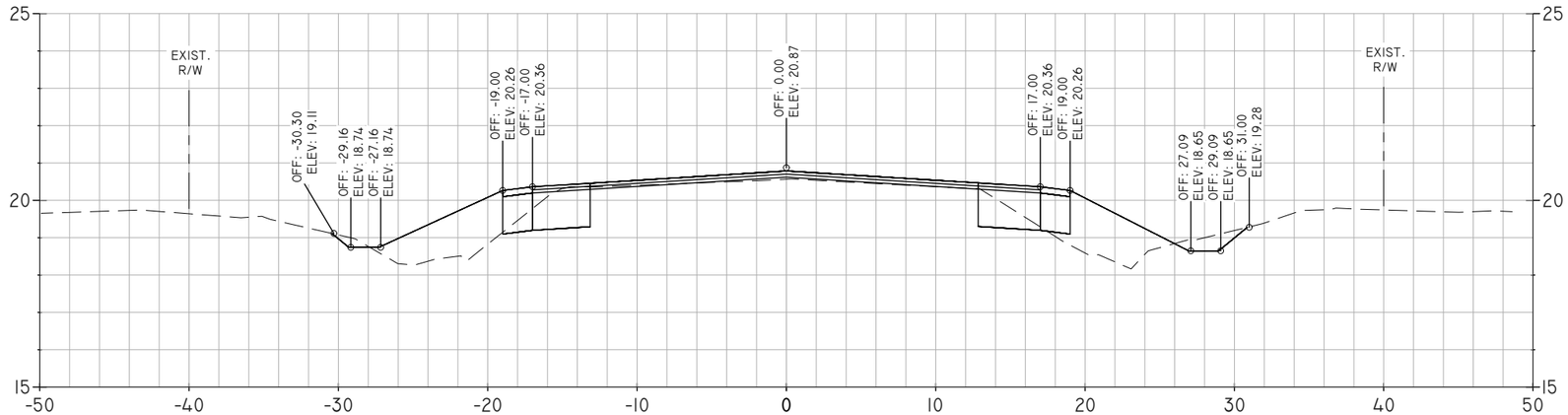

116+00.00

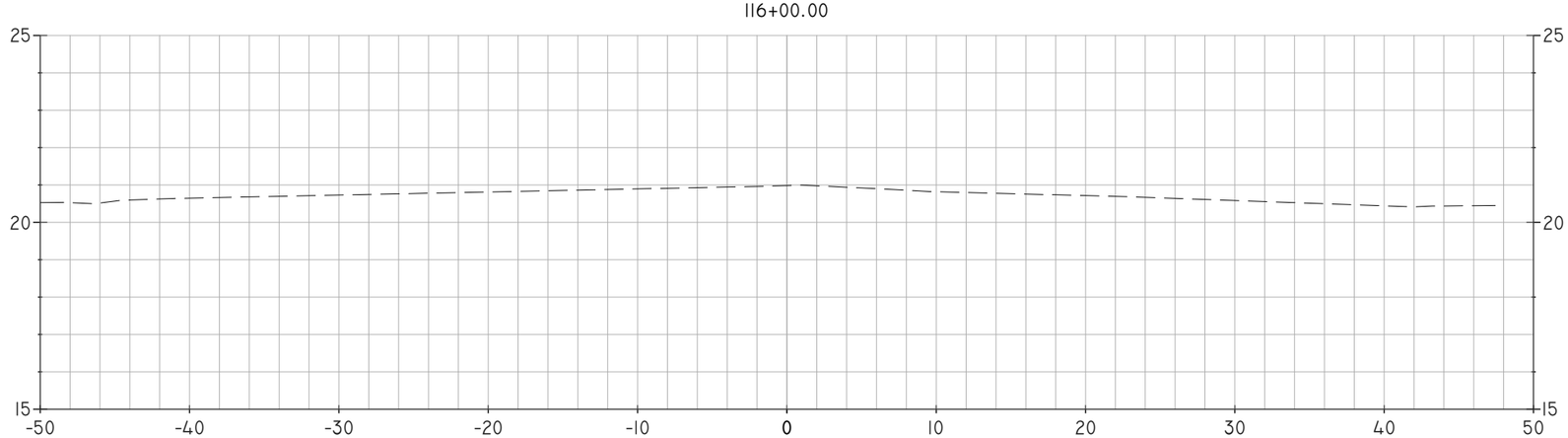

SHEET NUMBER 404

ASCENSION PARISH

PARISH	CONTROL SECTION	STATE PROJECT

DESIGNED	S.J.T.
CHECKED	D.J.M.
DETAILED	S.J.T.
CHECKED	D.J.M.
DATE	JUNE 2024
SHEET	CROSS SECTIONS

NO.	DATE	BY

CROSS SECTIONS

LA HWY 44 AT PARKER RD TEMPORARY TURN LANE

MCKIM&CREED
(225) 644-5523
www.mckimcreed.com
1022 S. Purpera Ave.
Gonzales, LA 70707-0298

<HILARIO> 06/25/24 8:45 AM I:\08391\0009\ENG\80-DRAWINGS\TEMP TURN LANE DESIGN\400 CROSS SECTIONS.DWG - 404

Materials Sampling and Testing Manual

Move Ascension

Date: 7/2019

I-1 2/07

SECTION 201 CLEARING & GRUBBING

MATERIAL		PURP.	SAMPLED BY / METHOD	TESTED BY	MIN. FREQ.	MIN. QUANT. / CONTAINER	CERT. / DISTR.	SMALL QUANTITY	TYPICAL HANDLING TIME	REMARKS
BACKFILL SOIL (HOLES)	Usable Soil	Accept.	SEE SECTION 203 OF THIS MANUAL	Proj. Eng.						

I-2 2/07

SECTION 202 REMOVING OR RELOCATING STRUCTURES AND OBSTRUCTIONS

MATERIAL		PURP.	SAMPLED BY / METHOD	TESTED BY	MIN. FREQ.	MIN. QUANT. / CONTAINER	CERT. / DISTR.	SMALL QUANTITY	TYPICAL HANDLING TIME	REMARKS
BACKFILL	Usable Soil	Accept.	SEE SECTION 203 OF THIS MANUAL	Proj. Eng.						

I-3 2/07

SECTION 203 EXCAVATION & EMBANKMENT

MATERIAL		PURP.	SAMPLED BY / METHOD	TESTED BY	MIN. FREQ.	MIN. QUANT. / CONTAINER	CERT. / DISTR.	SMALL QUANTITY	TYPICAL HANDLING TIME	REMARKS
EMBANKMENT, CUT & FILL AREAS	Density	Quality Control	Contractor TR 401	Contractor	*	-----	-----	-----	-----	*Shall check sufficient to ensure specifications are met.
		Accept.	Proj. Engr. TR 401	Proj. Engr.	1/1,000 lin ft/ 2-lane rdwy /lift*	-----	-----	-----	1/2 hr.	*DOTD TR 415 or TR 418 will be completed by the Department for each section/lift as needed for optimum moisture content and determining % compaction.
	Embankment lift (Uncompacted Thickness) or Subgrade Preparation	Quality Control	Contractor	Contractor	*	-----	-----	-----	-----	*Shall check sufficient to ensure specifications are met.
		Accept.	*	Proj. Engr.	1/1,000 lin ft/ 2-lane rdwy /lift	-----	-----	-----	-----	*Proj. Engr. to check lift thickness during placement & thickness of top layer during preparation.
	Moisture Content @ time of compaction	Quality Control	Contractor TR 403	Contractor	*	-----	-----	-----	-----	*Shall check sufficient to ensure specifications are met.
		Accept.	Proj. Engr. TR 403	Proj. Engr.	1/1,000 lin ft/ 2-lane rdwy /lift	-----	-----	-----	1 hr.	Test taken during or just prior to compaction operation.
	Soil on Cut Slope (for PH and PI)	Accept.	Proj. Engr. S 401	Proj. Eng.	1/1,000 lin ft/ slope/soil type	1 full sample sack	-----	-----	5 days	To determine the need for plastic soil blanket or soil modification option.

PAGE NOT USED

SECTION 203 EXCAVATION & EMBANKMENT (Cont'd)

MATERIAL		PURP.	SAMPLED BY / METHOD	TESTED BY	MIN. FREQ.	MIN. QUANT. / CONTAINER	CERT. / DISTR.	SMALL QUANTITY	TYPICAL HANDLING TIME	REMARKS
GEOTEXTILE FABRIC		Accept.	Proj. Engr. S 601	Proj. Eng.	1/type/ shipment/ source	3 lin ft of full width of fabric roll*	CC 1	150 yd^2	10 days	Sample only if questionable
LIME	Agricultural	Accept.	Proj. Engr. S 102 or S 101	Proj. Eng.	**SEE SECTION 718 OF THIS MANUAL.**					
	Hydrated or Quick Lime	Accept./ Verif./ Prelim.	**SEE SECTION 304 OF THIS MANUAL.**							
NON-PLASTIC EMBANKMENT	Density	Quality Control	Contractor TR 401	Contractor	*	-----	-----	-----	-----	*Shall check sufficient to ensure specifications are met.
		Accept.	Proj. Engr. TR 401	Proj. Engr.	1/1,000 lin ft/2-lane rdwy/lift	-----	-----	-----	1/2 hr.	-----
	Embankment Lift (Uncompacted Thickness)	Quality Control	-----	Contractor	*	-----	-----	-----	-----	*Shall check sufficient to ensure specifications are met.
		Accept.	Proj. Engr.*	Proj. Engr.	1/1,000 lin ft/ 2 lane rdwy/ lift	-----	-----	-----	-----	*Check lift thickness during placement.
	Moisture Content @ Time of Compaction	Quality Control	Contractor TR 403	Contractor	*	-----	-----	-----	-----	*Shall check sufficient to ensure specifications are met.
		Accept.	Proj. Engr. TR 403	Proj. Engr.	1/1,000 lin ft/ 2 lane rdwy/ lift	1 gal Friction top can	-----	-----	1 hr.	-----

SECTION 203 EXCAVATION & EMBANKMENT (Cont'd)

MATERIAL		PURP.	SAMPLED BY / METHOD	TESTED BY	MIN. FREQ.	MIN. QUANT. / CONTAINER	CERT. / DISTR.	SMALL QUANTITY	TYPICAL HANDLING TIME	REMARKS
NON-PLASTIC EMBANKMENT (Cont'd)	Sand	Quality Control	Contractor S 401	Contractor	*	-----	-----	-----	-----	*Shall check sufficient to ensure specifications are met.
		Accept.	Proj. Engr. *S 401	Proj. Eng.	1/2,000 yd^3	1 full sample sack	-----	500 yd^3	4 days	*The Lab will sample if material is in borrow pit.
	Stone	Quality Control	Contractor S 101	Contractor	*	-----	-----	-----	-----	*Shall check sufficient to ensure specifications are met.
		Accept.	Proj. Engr. S 101	Proj. Eng.	1/2,000 yd^3	1 full sample sack	-----	500 yd^3	4 days	Shall be from AML.
PLASTIC SOIL BLANKET	Thickness (Compacted)	Quality Control	Contractor	Contractor	*	-----	-----	-----	-----	*Shall check sufficient to ensure specifications are met.
		Accept.	Proj. Engr.	Proj. Engr.	1/1,000 lin ft /slope	-----	-----	-----	-----	Proj. Engr. to check lift thickness after compaction.
	Plastic Soil	Quality Control	Contractor S 401	Contractor	*	-----	-----	-----	-----	*Shall check sufficient to ensure specifications are met.
		Accept.**	Proj. Engr. S 401	Proj. Eng.	1/1,000 yd^3*	1 full sample sack	-----	300 yd^3	5 days	*Not required if tested & approved as excavation or borrow pit material. Pit approval allowed if identifiable strata can be isolated. **Shall support a satisfactory stand of grass in accordance with Sections 714 or 717.
SELECTED SOIL refer to 701 repeat this column in 701 check with M. Morvant before finalized	In-Place on Roadway	Quality Control	Contractor S 401	Contractor	*	-----	-----	-----	-----	*Shall check sufficient to ensure specifications are met.
		Accept.	Proj. Engr. S 401	Proj. Eng.	1/1,000 lin ft/ 2-lane rdwy or 1/2,000 lin ft / shoulder	1 full sample sack	-----	-----	5 days	-----
	Stockpile	Quality Control	Contractor S 401	Contractor	*	-----	-----	-----	-----	*Shall check sufficient to ensure specifications are met.
		Accept.	Proj. Engr. S 401	Proj. Eng.	1/1,000 yd^3	-----	-----	-----	5 days	-----

SECTION 203 EXCAVATION & EMBANKMENT (Cont'd)

MATERIAL		PURP.	SAMPLED BY / METHOD	TESTED BY	MIN. FREQ.	MIN. QUANT. / CONTAINER	CERT. / DISTR.	SMALL QUANTITY	TYPICAL HANDLING TIME	REMARKS
USABLE SOIL	Borrow Pits	Quality Control	Contractor S 401	Contractor	1 boring/acre*	-----	-----	-----	-----	*Results shall be submitted to Lab with boring request.
		Accept.	Lab S 401	Proj. Eng.	1 boring/ acre for first 2 acres; 1 boring/2 acres there after.	1/2 sample sack*	-----	100 yd^3	6 days	*Min. 10 lb required for test. May be sampled on the roadway if questionable.
	Excavation	Quality Control	Contractor S 401	Contractor	as required*	1 full sample sack	-----	-----	-----	May be accepted by subgrade soil survey upon approval of the Lab. *Sample full depth of excavation.
		Accept.	Lab S 401	Proj. Eng.	as required*	1 full sample sack	-----	100 yd^3	5 days	
	Stockpile	Quality Control	Contractor S 401	Proj. Eng.	*	-----	-----	-----	-----	*Shall check sufficient to ensure specifications are met.
		Accept.	Proj. Engr. S 401	Proj. Eng.	1/1,000 yd^3	1 full sample sack	-----	100 yd^3	5 days	Will be approved in stockpile before placing on project.
Water		Accept.	Proj. Engr. S 303	Proj. Eng.	1/source	1 qt plastic bottle	-----	-----	21 days	Visual inspection by P.E. Sample only if questionable.

SECTION 204 TEMPORARY EROSION CONTROL

MATERIAL		PURP.	SAMPLED BY / METHOD	TESTED BY	MIN. FREQ.	MIN. QUANT. / CONTAINER	CERT. / DISTR.	SMALL QUANTITY	TYPICAL HANDLING TIME	REMARKS
BURLAP		Accept.	Proj. Engr. S 601	Proj. Eng.		3 lin ft of full width of fabric roll*		-----	10 days	*Visual inspection by Proj. Engr. Sample only if questionable. Sample a minimum of 18 ft^2.
FERTILIZER		Accept.	**SEE SECTION 718 OF THIS MANUAL.**	Proj. Engr.			CA			
HAY BALES		Accept	-----	Proj. Engr.	-----	-----		-----	-----	Visual inspection by Proj. Engr.
SILT FENCE	Geotextile Fabric (Wire Supported)	Accept.	Proj. Engr. S 601	Proj. Eng.		3 lin ft of full width of fabric roll*	CC	-----	10 days	(AML) *Visual inspection by Proj. Engr. Sample only if questionable. Sample a minimum of 18 ft2.
	Geotextile Fabric (Self Supported)	Accept.	Proj. Engr. S 601	Proj. Eng.		3 lin ft of full width of fabric roll*	CC	-----	10 days	(AML) *Visual inspection by Proj. Engr. Sample only if questionable. Sample a minimum of 18 ft2.
JUTE FABRIC		Accept.	Proj. Engr. S 601	Proj. Eng.		-----		-----	10 days	Visual inspection by Proj. Engr. Sample only if questionable.
LIME (Agricultural)		Accept.*	**SEE SECTION 718 OF THIS MANUAL.**	Proj. Eng.			CC			*Visual inspection by Proj. Engr. Sample only if questionable.
LIVESTOCK WIRE		Accept.	Proj. Engr. S 601	Proj. Eng.		-----	CC	-----	10 days	*Visual inspection by Proj. Engr. Sample only if questionable.
TEMPORARY CONSTRUCTION ENTRANCE	Geotextile Fabric	Accept.	Proj. Engr. S 601	Proj. Eng.		3 lin ft of full width of fabric roll*	CC	-----	10 days	(AML)*Visual inspection by Proj. Engr. Sample only if questionable. Sample a minimum of 18 ft2.
	Recycled PCC	Accept.		Proj. Engr.			-----	-----	-----	*Visual inspection by Proj. Engr. Sample only if questionable. Sample size and unit weight determined by Lab. Must be from approved source.
	Stone	Accept.		Proj. Engr.			-----	-----	-----	(AML) *Visual inspection by Proj. Engr. Sample only if questionable. Sample size and unit weight determined by Lab. Must be from an approved source.

SECTION 204 TEMPORARY EROSION CONTROL (Cont'd)

MATERIAL		PURP.	SAMPLED BY / METHOD	TESTED BY	MIN. FREQ.	MIN. QUANT. / CONTAINER	CERT. / DISTR.	SMALL QUANTITY	TYPICAL HANDLING TIME	REMARKS
MULCH	Fiber Mulch	Accept.*	**SEE SECTION 716 OF THIS MANUAL.**	Proj. Eng.			CA			*AML *Visual inspection by Proj. Engr. Sample only if questionable.
	Tacking Agent	Accept.*	**SEE SECTION 716 OF THIS MANUAL.**	Proj. Eng.			CA			*AML *Visual inspection by Proj. Engr. Sample only if questionable.
	Hay or Straw	Accept.*	**SEE SECTION 716 OF THIS MANUAL.**	Proj. Eng.						*Visual inspection by Proj. Engr. Sample only if questionable.
	Wood or Steel	Accept.	Proj. Engr. S 601	Proj. Engr.	*	-----	-----	-----	-----	*Visual inspection by Proj. Engr.
POSTS		Accept.	**SEE SECTION 717 OF THIS MANUAL.**	Proj. Engr.						*Visual inspection by Proj. Engr. Sample only if questionable.
SEED	Fiber Mats	Accept.	-----	Proj. Eng.	*	-----	CA	-----	21 days	*Visual inspection by Proj. Engr. Sample only if questionable.
SLOPE DRAINS	Pipe	Accept.	-----	Proj. Eng.	*	-----	-----	-----	21 days	*Visual inspection by Proj. Engr.

SECTION 301 CLASS I BASE COURSE

MATERIAL		PURP.	SAMPLED BY / METHOD	TESTED BY	MIN. FREQ.	MIN. QUANT. / CONTAINER	CERT. / DISTR.	SMALL QUANTITY	TYPICAL HANDLING TIME	REMARKS
AGGREGATE BASES (DEDICATED STOCKPILE)										
	Recycled PC Concrete	Prelim. Source Approval	Proj. Eng. S 101 & S 801	Proj. Eng.	1/Stockpile*	12 full sample sacks	-----	-----	5 weeks	*See S 801 for maximum stockpile quantities. Raw material stockpiles shall be approved by Dist. Lab Engr. prior to crushing.
		Quality Control	Contractor S 101 & S 801	Contractor	*	-----	-----	-----	-----	*Must be controlled so that materials placed in stockpile will conform to specifications when tested by the Department.
		Design*	Proj. Engr. S 101	Proj. Eng.	1/source	6 full sample sacks	-----	-----	4 days	Material must be source approved. *For moisture-density relationships.
		Accept.	Proj. Engr. S 101	Proj. Eng.	1/1000 yd^3	1 full sample sack	-----	-----	4 days	Material must be source approved.
AGGREGATE BASES (DEDICATED STOCKPILE) (Cont'd)	Stone	Quality Control	Contractor S 101	Contractor	*	-----	-----	-----	-----	*Must be controlled so that materials placed in stockpile will conform to specifications when tested by the Department.
		Design*	Proj. Engr. S 101	Dist. Lab	1/source	6 full sample sacks	-----	-----	4 days	(AML) *For moisture-density relationships.
		Accept.	Proj. Engr. S 101	Dist. Lab	1/1000yd^3	1 full sample sack	-----	-----	4 days	-----
ASPHALTIC CONCRETE BASES										

SECTION 301 CLASS I BASE COURSE (Cont'd)

MATERIAL		PURP.	SAMPLED BY / METHOD	TESTED BY	MIN. FREQ.	MIN. QUANT. / CONTAINER	CERT. / DISTR.	SMALL QUANTITY	TYPICAL HANDLING TIME	REMARKS
ASPHALTIC MATERIAL	Curing Membrane	SEE SECTION 506 OF THIS MANUAL.								
	Prime Coat	SEE SECTION 505 OF THIS MANUAL.								
CEMENT (HYDRAULIC)	Types I, II & IP	Prelim. Source Approval	Mfr. S 102	Proj. Eng.	1/month/type	1 gal friction top can or acceptable moisture proof container	-----	-----	-----	(AML) Composited and blended from daily plant samples and submitted for quality control verification.
		Accept.	-----	Proj. Engr.	1/shipment	-----	CC 1 & 7	-----	-----	(AML)
		Verif.	Proj. Engr. S 102	Proj. Eng.	1/project/ source	1 gal friction top can	-----	-----	21 days	(AML)
PORTLAND CEMENT CONCRETE		Design/ Quality Control/	SEE SECTION 706 & 901 OF THIS MANUAL.							
MIXTURE WITH CEMENT AT CENTRAL MIX PLANT sampling frequency	Percent Cement	Quality Control	Contractor TR 436	Contractor	2/half day*	-----	-----	-----	-----	*In addition to start-up of plant each day and after each shut down.
		Accept.	Proj. Engr. TR 436	Proj. Engr.	1/half day	-----	-----	-----	1 hr	-----
	Gradation	Quality Control	Contractor S 101	Contractor	1/half day*	1 full sample sack	-----	-----	-----	*When gradation is a requirement of specifications.
		Accept.	Proj. Engr. S 101	Proj. Engr.	1/day*	1 full sample sack	-----	-----	4 hr.	*Gradation will be run when questionable or individual components of SCG are mixed in a pugmill.
	Moisture Content	Quality Control	Contractor S 101 S 401	Contractor	1/half day*	-----	-----	-----	-----	*In addition to start-up of plant each day and after each shut down.
	Proportions	Quality Control	Contractor TR 436	Contractor	*	-----	-----	-----	-----	*Shall be monitored continuously.
		Accept.	Contractor TR 436	Proj. Engr.	1/half day	-----	-----	-----	1 hr.	-----
	Pulverization	Quality Control	Contractor S 401	Contractor	1/half day	-----	-----	-----	-----	-----
		Accept.	Proj. Engr. S 401	Proj. Engr.	1/half day	-----	-----	-----	1/2 hr.	-----

SECTION 301 CLASS I BASE COURSE (Cont'd)

MATERIAL		PURP.	SAMPLED BY / METHOD	TESTED BY	MIN. FREQ.	MIN. QUANT. / CONTAINER	CERT. / DISTR.	SMALL QUANTITY	TYPICAL HANDLING TIME	REMARKS
BASE MATERIAL ON ROADWAY	Density	Quality Control	Contractor TR 401	Contractor	*	-----	-----	-----	-----	*Shall test sufficient to ensure specifications will be met.
		Accept.	Proj. Engr. TR 401	Proj. Engr.	1/1000 lin ft/ 2-lane rdwy or 1/2000 lin ft/shoulder	-----	-----	-----	1/2 hr.	-----
	Cross Slope & Grade	Quality Control	Contractor	Contractor	*	-----	-----	-----	-----	*Shall take measurements sufficient to ensure specifications are met.
		Accept.	Proj. Engr.	Proj. Engr.	1/half day	-----	-----	-----	1/4 hr.	Use an approved 10-ft metal static straightedge or other approved device.
	Moisture Content (For Soil Cement or Cement Stabilized Mixtures)	Quality Control	Contractor TR 403	Contractor	*	-----	-----	-----	-----	*Shall test sufficient to ensure specifications are met.
		Accept.	Proj. Engr. S 101 S 401	Proj. Engr.	1/half day	-----	-----	-----	1 hr.	(TR 403)
	Thickness & Width	Quality Control	Contractor	Contractor	*	-----	-----	-----	-----	*Shall take measurements sufficient to ensure specifications are met.
		Verif.	Proj. Engr. TR 602	Proj. Engr.	1/half day	-----	-----	-----	1/4 hr.	Proj. Engr. shall notify the Dist. Lab when section is complete.
		Accept.	Dist. Lab TR 602	Proj. Eng.	1/1000 lin ft/ 2-lane rdwy or 1/2000 lin ft/shoulder	-----	-----	300 lin ft per location	3 days	*See DOTD TR 602. For small quantity, Proj. Engr. Documents in field book.
SOIL (RAW)	Dedicated Stockpile	Quality Control	Contractor S 401	Contractor	-----	-----	-----	-----	-----	Control uniformity of moisture and soil type while stockpile is being built.
		Design*/ Accept.	Proj. Engr. S 401	Proj. Eng.	1/1000 yd^3	6 full sample sacks**	-----	-----	21 days max	*For cement content & moisture-density relationships. **When soils are to be blended, each component must meet specifications before blending. Design and final
WATER		Accept.	Proj. Engr. S 303	Proj. Eng.	1/source*	1 qt plastic bottle	-----	-----	21 days	*Drinkable water need not be sampled.

SECTION 302 CLASS II BASE COURSE

MATERIAL		PURP.	SAMPLED BY / METHOD	TESTED BY	MIN. FREQ.	MIN. QUANT. / CONTAINER	CERT. / DISTR.	SMALL QUANTITY	TYPICAL HANDLING TIME	REMARKS
NOTE: WHEN A CLASS II BASE COURSE IS PRODUCED BY CENTRAL PLANT MIXING, USE THE SAMPLING SCHEDULES IN SECTION 301 OF THIS MANUAL.										
AGGREGATE BASES										
	Recycled PC Concrete	Prelim. Source Approval	Dist. Lab S 801	Proj. Eng.	1/stockpile*	6 full sample sacks	-----	-----	5 weeks	*See S 801 for maximum stockpile quantities. Raw material stockpiles shall be approved by Dist. Lab Engineer prior to crushing.
		Quality Control	Contractor S 101	Contractor	*	-----	-----	-----	-----	*Must test sufficient to ensure materials being delivered meet specification requirements.
		Design*	Proj. Engr. S 101	Proj. Eng.	1/source	6 full sample sacks	-----	-----	4 days	Material must be source approved. *For moisture-density relationships.
		Accept.	Proj Engr S 101	Proj. Eng.	1/1000 yd^3	1 full sample sack	-----	100 yd^3	4 days	Material must be source approved.
	Stone	Quality Control	Contractor S 101	Contractor	*	-----	-----	-----	-----	*Must test sufficient to ensure materials being delivered meet specification requirements.
		Design*	Proj. Engr. S 101	Proj. Eng.	1/source	6 full sample sacks	-----	-----	4 days	(AML) *For moisture-density relationships.
		Accept.	Proj.Engr . S 101	Proj. Eng.	1/1000 yd^3	1 full sample sack	-----	100 yd^3	4 days	(AML) Materials must be source approved.
ASPHALTIC CONCRETE BASES										

SECTION 302 CLASS II BASE COURSE (cont'd)

MATERIAL		PURP.	SAMPLED BY / METHOD	TESTED BY	MIN. FREQ.	MIN. QUANT. / CONTAINER	CERT. / DISTR.	SMALL QUANTITY	TYPICAL HANDLING TIME	REMARKS
ASPHALTIC MATERIALS	Curing Membrane	**SEE SECTION 506 0F THIS MANUAL.**								
	Prime Coat	**SEE SECTION 505 0F THIS MANUAL.**								
CEMENT (Hydraulic)	Types I, II & IP	Prelim. Source Approval	Mfr. AASHTO T 127	Proj. Eng.	1/month/type	1 gal friction top can or acceptable moisture proof container	-----	-----	-----	(AML) Composited and blended from daily plant samples and submitted for quality control verification. Sample only if questionable.
		Accept.	-----	Proj. Engr.	1/shipment	-----	CD 1 & 7	-----	-----	(AML)
		Verif.	Proj. Engr. S 101	Proj. Eng.	1/project/ source	1 gal friction top can	-----	-----	21 days	(AML)
CONCRETE, PORTLAND CEMENT, BASE		Design/ Quality Control/ Accept.	**SEE SECTION 901 OF THIS MANUAL.**							

SECTION 302 CLASS II BASE COURSE (cont'd)

MATERIAL		PURP.	SAMPLED BY / METHOD	TESTED BY	MIN. FREQ.	MIN. QUANT. / CONTAINER	CERT. / DISTR.	SMALL QUANTITY	TYPICAL HANDLING TIME	REMARKS
BASE MATERIAL ON ROADWAY	Cement Spread Rate (For soil cement or cement treated bases only)	Quality Control	Contractor TR 436	Contractor	each transport*	-----	-----	-----	-----	*The contractor shall determine the length of spread prior to mixing. Use an approved sampling device.
		Accept.	Proj. Engr. TR 436	Proj. Engr.	1/day*	-----	-----	-----	1/2 hr.	*The Proj. Engr. will verify the length of spread prior to mixing. At the discretion of the Proj. Engr. Additional testing shall be performed when cement content changes. Use an approved sampling device.
	Cross Slope & Grade	Quality Control	Contractor	Contractor	*	-----	-----	-----	-----	*Shall check sufficient to ensure specifications are met.
		Accept.	Proj. Engr.	Proj. Engr.	1/half day	-----	-----	-----	1/4 hr.	Use an approved 10 ft metal static straightedge or other approved device.
	Density	Quality Control	Contractor TR 401	Contractor	*	-----	-----	-----	-----	*Shall test sufficient to ensure specifications are met.
		Accept.	Proj. Engr. TR 401	Proj. Engr.	1/1000 lin ft/ 2-lane rdwy or 1/2000 lin ft/shoulder	-----	-----	-----	1/2 hr.	----- Proof roll to be performed with a 15 ton tandem truck to find base failures or pumping
	Moisture Content (For Soil Cement or treated Sand-Clay-Gravel only)	Quality Control	Contractor S 101 or S 401	Contractor	*	-----	-----	-----	-----	*Shall test sufficient to ensure specifications are met.
		Accept.	Proj. Engr. S 101 or S 401	Proj. Engr.	1/1000 lin ft/ 2-lane rdwy or 1/2000 lin ft/shoulder	1 gal friction top can*	-----	-----	1 hr.	*May be obtained by M.C. % determined during application of TR 415 B, if available on in-place moisture at the time of compaction (TR 403).
	Pulverization (For soil-cement only)	Quality Control	Contractor S 401	Contractor	*	-----	-----	-----	-----	*Soil cement shall be tested sufficiently to ensure specifications are met.
		Accept.	Proj. Engr. S 401	Proj. Engr.	1/1000 lin ft/ 2-lane rdwy or 1/2000 lin ft/shoulder	1 gal friction top can	-----	-----	1/2 hr.	DOTD TR 431
	Thickness & Width	Quality Control	Contractor	Contractor	*	-----	-----	-----	-----	*Shall be measured sufficiently to ensure specifications are met.
		Verif.	Proj. Engr. TR 602	Proj. Engr.	1/half day	-----	-----	-----	1/4 hr.	Proj. Engr. To notify Dist. Lab when section is completed.
		Accept.	Dist. Lab TR 602	Proj. Eng.	1/1000 lin ft/ 2-lane rdwy or 1/2000 lin ft/shoulder	-----	-----	300 lin ft per location	3 days	See DOTD TR 602. For small quantity, Proj. Engr. documents in field book.

SECTION 302 CLASS II BASE COURSE (cont'd)

MATERIAL		PURP.	SAMPLED BY / METHOD	TESTED BY	MIN. FREQ.	MIN. QUANT. / CONTAINER	CERT. / DISTR.	SMALL QUANTITY	TYPICAL HANDLING TIME	REMARKS
GEOTEXTILE SEPARATOR FABRIC	Class D	Accept.	**SEE SECTION 203 OF THIS MANUAL.**	Proj. Eng.						Only required when aggregate base course placed on un-treated or lime-treated soils.
SOILS (RAW) ON ROADWAY FOR SOIL CEMENT	Density (93%)	Quality Control	Contractor TR 401	Contractor	*	-----	-----	-----	-----	*Shall test sufficient to ensure specifications are met. Minimum density is required on roadway prior to spreading cement. Check M.C. % before mixing with cement (TR 403).
		Accept.	Proj. Engr. TR 401	Proj. Engr.	1/half day	-----	-----	-----	1/2 hr.	-----
	Soils/Soil-Aggregate	Design*	Proj. Engr. S 101 or S 401	Proj. Eng.	1/1000 lin ft/2-lane rdwy or 1/ 2000 lin ft/shoulder	6 full sample sacks of blend	-----	-----	21 days	*For cement content and moisture-density relationships. Design will be conducted on blend.
		Accept.	Proj. Engr. S 101 or S 401	Proj. Eng.	1/1000 lin ft/2-lane rdwy or 1/ 2000 lin ft/shoulder	1 full sample sack of blend & 1 sample sack of each component	-----	200 lin ft	5 days	Blending of soils prior to mixing with cement will not be allowed for adjustment of LL or PI.
SOILS (RAW) IN STOCKPILE FOR SOIL CEMENT	Soils/Soil-Aggregate	Quality Control	Contractor S 101 or S 401	Contractor	*	-----	-----	-----	-----	*Shall test sufficient to ensure specifications will be met when placed on roadway. Check M.C. % before spreading cement.
		Design*	Proj. Engr. S 101 or S 401	Proj. Eng.	1/1000 yd^3	6 full sample sacks of blend & 1 full sample sack of each component	-----	-----	21 days	*For cement content and moisture-density relationships. Design will be conducted on blend. For contractor design material sample must be accompanied by independent lab result in accordance with specification.
		Accept.	Proj. Engr. S 101 or S 401	Proj. Eng.	1/1000yd^3	1 full sample sack of blend & 1 full sample sack of each component	-----	100 yd^3	5 days	Blending of soils prior to mixing with cement will not be allowed for adjustment of LL or PI.
Water		Accept.	Proj. Engr. S 303	Proj. Eng.	1/source*	1 qt plastic bottle	-----	-----	21 days	*Drinkable water need not be sampled.

SECTION 303 IN-PLACE CEMENT STABILIZED BASE COURSE & IN-PLACE CEMENT TREATED BASE COURSE

MATERIAL		PURP.	SAMPLED BY / METHOD	TESTED BY	MIN. FREQ.	MIN. QUANT. / CONTAINER	CERT. / DISTR.	SMALL QUANTITY	TYPICAL HANDLING TIME	REMARKS
FOR DETAILS ON HYDRAULIC CEMENT AND WATER, REFER TO SECTION 301 OF THIS MANUAL. FOR DETAILS ON ASPHALTIC CURING MEMBRANE, REFER TO SECTION 506 OF THIS MANUAL. FOR DETAILS ON ASPHALTIC CONCRETE OR PORTLAND CEMENT CONCRETE, REFER TO SECTIONS 502 AND 901 OF THIS MANUAL, AS APPLICABLE.										
MATERIAL FOR BASE PRIOR TO SPREADING CEMENT (Existing or Furnished Soils/Soil-Aggregate)	Contractor Furnished Soil	Quality Control	Contractor S 101 or S 401	Contractor	-----	-----	-----	-----	-----	Must test sufficient to ensure material will meet specification requirements before placing on roadway. Check M.C.% on all materials before spreading cement.
		Accept.	Proj. Engr. S 101 or S 401	Proj. Engr.	1/1000 yd^3	1 full sample sack	-----	-----	4 days	Contractor furnished material will be approved before incorporation into existing material. Furnished material not meeting the requirement of specification Subsection 302.02(a) will not be incorporated in the base.
	Density (93%)	Quality Control	Contractor TR 401	Contractor	*	-----	-----	-----	-----	*Shall be tested frequently enough to ensure specifications are met. Minimum density is required on roadway prior to mixture with cement. All blending of soils materials will be accomplished before testing.
		Accept.	Proj. Engr. TR 401	Proj. Engr.	1/half day	-----	-----	-----	1/2 hr.	-----
	In-Place Material on Roadway	Design*/ Accept.	Contractor S101 or S401	Proj. Engr.	1/1000 lin ft/2-lane rdwy or 1/2000 lin ft/ shoulder	6 full sample sacks	-----	-----	14 days	*For cement content and moisture-density relationships (if needed). Design will be conducted on the final blend.
	Pulverization	Quality Control	Contractor TR 401	Contractor	*	-----	-----	-----	-----	*Shall be tested frequently enough to ensure specifications are met.
		Accept.	Proj. Engr. TR 431	Proj. Engr.	1/1000 lin ft/2-lane rdwy or 1/2000 lin ft/ shoulder	-----	-----	-----	1/2 hr.	Shall be obtained after blending of any contractor furnished material. Pulverization shall be approved prior to spreading cement.

SECTION 303 IN-PLACE CEMENT STABILIZED BASE COURSE & IN-PLACE CEMENT TREATED BASE COURSE (Cont'd)

MATERIAL		PURP.	SAMPLED BY / METHOD	TESTED BY	MIN. FREQ.	MIN. QUANT. / CONTAINER	CERT. / DISTR.	SMALL QUANTITY	TYPICAL HANDLING TIME	REMARKS
FOR DETAILS ON HYDRAULIC CEMENT AND WATER, REFER TO SECTION 301 OF THIS MANUAL. FOR DETAILS ON ASPHALTIC CURING MEMBRANE, REFER TO SECTION 506 OF THIS MANUAL. FOR DETAILS ON ASPHALTIC CONCRETE OR PORTLAND CEMENT CONCRETE, REFER TO SECTIONS 501,501 AND 901 OF THIS MANUAL, AS APPLICABLE.										
MIXTURE WITH CEMENT ON ROADWAY	Cement Spread Rate	Quality Control	Contractor* TR 436	303.07 Contractor	each transport	**	-----	-----	-----	*The contractor shall determine the length of spread prior to mixing. **Use an approved sampling device.
		Accept.	Proj. Engr.* TR 436	Proj. Engr.	1/day	**	-----	-----	1/2 hr.	*The Proj. Engr. will verify the length of spread prior to mixing. **Use an approved sampling device.
	Cross Slope & Grade	Quality Control	Contractor	303.07 Contractor	*	-----	-----	-----	-----	*Shall test sufficient to ensure specifications are met. Use an approved 10 ft metal static straightedge.
		Verif.	Proj. Engr.	Proj. Engr.	*	-----	-----	-----		Use an approved 10 ft. metal static straightedge or other approved device.
	Density	Quality Control	Contractor TR 401	303.07 Contractor	*	-----	-----	-----	-----	*Shall test sufficient to ensure specifications are met.
		Accept.	Proj. Engr. TR 401	Proj. Engr.	1/1000 lin ft/2-lane rdwy or 1/2000 lin ft/ shoulder	-----	-----	-----	1/2 hr.	-----
	Moisture Content	Quality Control	Contractor S 101 or S 401	303.05 303.07 Contractor	*	-----	-----	-----	-----	*Shall test sufficient to ensure specifications are met. (DOTD TR 403)
		Accept.	Proj. Engr. S 101 or S 401	Proj. Engr.	1/1000 lin ft/2-lane rdwy or 1/2000 lin ft/ shoulder	1 gal friction top can*	-----	-----	1 hr.	*May be obtained by M.C.% determined during application of TR 415 B, if available on in-place moisture at the time of compaction (TR 403).
	Thickness & Width	Quality Control	Contractor	303.07 Contractor	*	-----	-----	-----	-----	*Shall be measured sufficiently to ensure specifications are met.
		Verif.	Proj. Engr. TR 602	Proj. Engr.	1/half day	-----	-----	-----	1/4 day	Proj. Engr. shall notify Dist. Lab when section is complete.
		Accept.	Dist. Lab TR 602	Proj. Engr.	1/1000 lin ft/2-lane rdwy or 1/2000 lin ft/ shoulder	-----	-----	300 lin ft per location	3 days	*See DOTD TR 602. For small quantity, Proj. Engr. documents in field book.

SECTION 304 LIME TREATMENT

MATERIAL		PURP.	SAMPLED BY / METHOD	TESTED BY	MIN. FREQ.	MIN. QUANT. / CONTAINER	CERT. / DISTR.	SMALL QUANTITY	TYPICAL HANDLING TIME	REMARKS
FOR DETAILS ON HYDRAULIC CEMENT REFER TO SECTION 301 OF THIS MANUAL. FOR DETAILS ON ASPHALTIC CURING MEMBRANE, REFER TO SECTION 506 OF THIS MANUAL. FOR DETAILS ON ASPHALTIC CONCRETE OR PORTLAND CEMENT CONCRETE, REFER TO SECTIONS 502 AND 901 OF THIS MANUAL, AS APPLICABLE.										
CURING MEMBRANE	Type B (only)	-----	-----	Proj. Engr.	**SEE SECTION 506 OF THIS MANUAL.**					
LIME (Hydrated and Quicklime)		Prelim. Source Approval	Mfr. S 102	Proj. Engr.	1/quarter	-----	-----	-----	-----	-----
		Accept.	-----	Proj. Engr.	1/shipment	-----	CD 1 & 7	-----	-----	(AML)
		Verif.	Proj. Engr. S 102	Proj. Engr.	1/project/ source	1 gal friction top can	-----	-----	21 days	(AML) *Not required if sampled under another item.
MIXTURE ON ROADWAY	Density- (Type B & C)	Quality Control	Contractor TR 401	Contractor	*	-----	-----	-----	-----	*Shall check sufficient to ensure specifications are met.
		Accept.	Proj. Engr. TR 401	Proj. Engr.	1/1000 lin ft/2-lane rdwy or 1/2000 lin ft/ shoulder	-----	-----	-----	1/2 hr.	Proof roll to be performed with a 15 ton tandem truck to find base failures or pumping
	Density- (Type D)	Accept.	Proj. Engr.	Proj. Engr.	-----	-----	-----	-----	-----	Compact to the satisfaction of the Engineer.
	Density- (Type E)	Accept.	Proj. Engr.	Proj. Engr.	**SEE SECTION 203 OF THIS MANUAL.**					
	Lime Spread Rate	Quality Control	Contractor* TR 436	Contractor	Each transport	**	-----	-----	1/2 hr.	*The contractor shall determine the length of spread. **Use an approved sampling device
		Accept.	Proj. Engr.* TR 436	Proj. Engr.	1/1000 lin ft/2-lane rdwy or 1/2000 lin ft/ shoulder	**	-----	-----	1/2 hr.	*The Proj. Engr. shall verify the length of spread. **Use an approved sampling device.

SECTION 304 LIME TREATMENT (Cont'd)

MATERIAL		PURP.	SAMPLED BY / METHOD	TESTED BY	MIN. FREQ.	MIN. QUANT. / CONTAINER	CERT. / DISTR.	SMALL QUANTITY	TYPICAL HANDLING TIME	REMARKS
MIXTURE ON ROADWAY (Cont'd)	Pulverization (Type B & C)	Quality Control	Contractor S 101	Contractor	*	-----	-----	-----	-----	*Shall Check sufficient to ensure specifications are met.
		Accept.	Proj. Engr. S 101	Proj. Engr.	1/1000 lin ft/2-lane rdwy or 1/2000 lin ft/ shoulder	1 gal friction top can	-----	-----	1/2 hr.	-----
	Pulverization (Type D & E)	Accept.	Proj. Engr		-----	*	-----	-----	-----	*Satisfaction of Engineer.
	Thickness & Width (Type B)	Quality Control	Contractor	Contractor	*	-----	-----	-----	-----	*Shall Check sufficient to ensure specifications are met.
		Verif.	Proj. Engr. TR 602	Proj. Engr.	1/half day	-----	-----	-----	1/4 hr.	Proj. Engr. to notify Dist. Lab when section is complete.
		Accept.	Proj. Engr TR 602	Proj. Engr.	1/1000 lin ft/2-lane rdwy or 1/2000 lin ft/ shoulder	-----	-----	300 lin ft per location	3 days	See DOTD TR 602. For small quantity, Proj. Engr. Documents in field book.
	Thickness & Width (Type C & D)	Accept.	Proj. Engr. TR 602*	Proj. Engr.	*	-----	-----	-----	-----	*Satisfaction of the Project Engr. Documents in field book.
	Thickness & Width (Type E)	Accept.		Proj. Engr.	**FOR LIFT THICKNESS REQUIREMENTS SEE SECTION 203 OF THIS MANUAL**					
SOIL OR SOIL-AGGREGATE	% Lime*	Design	Proj. Engr. S 101 or S 401	Proj. Engr.	1/1000 lin ft/2-lane rdwy or 1/2000 lin ft/ shoulder	6 full sample sacks	-----	-----	10 days	*Not required when percent lime is specified in plans or project specifications.
Water		Accept.	Proj. Engr. S 303	Proj. Engr.	1/source*	1 qt plastic bottle	-----	-----	21 days	*Drinkable water need not be sampled.

SECTION 305 SUBGRADE LAYER

MATERIAL		PURP.	SAMPLED BY / METHOD	TESTED BY	MIN. FREQ.	MIN. QUANT. / CONTAINER	CERT. / DISTR.	SMALL QUANTITY	TYPICAL HANDLING TIME	REMARKS
NOTE: WHEN A SUBGRADE LAYER IS PRODUCED BY CENTRAL PLANT MIXING, USE THE SAMPLING SCHEDULES IN SECTION 301 OF THIS MANUAL. FOR PLACEMENT AND CONSTRUCTION REFER TO APPLICABLE SECTIONS OF THIS MANUAL.										
AGGREGATES	Stone, Recycled PC Concrete	**SEE SECTION 302 OF THIS MANUAL**		Proj. Engr.						
	Asphaltic Concrete	Prelim. Source Approval	Proj. Engr. S 101	Proj. Engr.	1/source/blend	6 full sample sacks	-----	-----	4 weeks	Source shall be approved by Materials Lab prior to use.
CEMENT	**SEE SECTION 302 OF THIS MANUAL.**									
ASPHALTIC MATERIALS	Curing Membrane	**SEE SECTION 506 OF THIS MANUAL.**								
	Prime Coat	**SEE SECTION 505 OF THIS MANUAL.**								
GEOTEXTILE FABRIC	**SEE SECTION 203 OF THIS MANUAL**									
LIME (Hydrated or Quicklime)	**SEE SECTION 304 OF THIS MANUAL.**									
MIXTURE WITH LIME AND/OR CEMENT ON ROADWAY	Pulverization*	Accept.	Proj. Engr. S 401	Proj. Engr.	1/1000 lin ft/2-lane rdwy or 1/2000 lin ft/shoulder	-----	-----	-----	1/2 hr.	*For soil after mixing with cement and/or lime.
SOIL		Design*	Proj. Engr. S 401	Proj. Engr.	1/1000 lin ft/2-lane rdwy or 1/2000 lin ft/shoulder	6 full sample sacks	-----	-----	10 days	*For Moisture Density relationships.
		Accept.*	Proj. Engr. TR 602	Proj. Engr.	1/1000 lin ft/2-lane rdwy or 1/2000 lin ft/shoulder	1 full sample sack	-----	-----	4 days	*When soils are to be blended, each component must meet specifications before blending. Design and final acceptance will be conducted on the blend.

SECTION 305 SUBGRADE LAYER (Cont'd)

MATERIAL		PURP.	SAMPLED BY / METHOD	TESTED BY	MIN. FREQ.	MIN. QUANT. / CONTAINER	CERT. / DISTR.	SMALL QUANTITY	TYPICAL HANDLING TIME	REMARKS
SUBGRADE LAYER	Density (Stone Recycled	SEE SECTIONS 302 AND 308 OF THIS MANUAL								
WATER		Accept.	Proj. Engr. S 303	Proj. Engr.	1/source	1 qt plastic bottle	-----	-----	21 days	Drinkable water need not be sampled.

SECTION 306 SCARIFYING & COMPACTING ROADBED

MATERIAL		PURP.	SAMPLED BY / METHOD	TESTED BY	MIN. FREQ.	MIN. QUANT. / CONTAINER	CERT. / DISTR.	SMALL QUANTITY	TYPICAL HANDLING TIME	REMARKS
EXISTING MATERIAL	Density	Accept.	Proj. Engr. TR 401, TR 415 or TR 418	Proj. Engr	1/1000 lin ft/ 2-lane rdwy or 1/2000 lin ft/ shoulder	-----	-----	-----	1/2 hr.	-----
ASPHALTIC MATERIAL	Prime Coat	SEE SECTION 506 TO THIS MANUAL.								

SECTION 307 PERMEABLE BASES

MATERIAL		PURP.	SAMPLED BY / METHOD	TESTED BY	MIN. FREQ.	MIN. QUANT. / CONTAINER	CERT. / DISTR.	SMALL QUANTITY	TYPICAL HANDLING TIME	REMARKS
AGGREGATE	Stone	Accept.	Proj. Engr. S 101	Proj. Engr.	1/1000yd3	1 full sample sack	-----	-----	4 days	(AML)
ASPHALTIC MATERIALS	Asphalt Cement	Prelim. Source Approval, Accept., Verif.	SEE SECTION 502 OF THIS MANUAL							(AML)
ANTI-STRIP		Prelim. Source Approval, Accept. Verif.	SEE SECTION 502 OF THIS MANUAL							(AML)
ADMIXTURE		Prelim. Source Approval, Accept., Verif.	SEE SECTION 901 OF THIS MANUAL							(AML)
CEMENT (HYDRAULIC)		Prelim. Source Approval, Accept., Verif.	SEE SECTION 901 OF THIS MANUAL							(AML)
CURING COMPOUND		Prelim. Source Approval, Accept.	SEE SECTION 601 OF THIS MANUAL							(AML)
PERMEABLE ASPHALT BASE (PLANT)	JMF	Design*	-----	Contractor	1/mix/plant	-----	-----	-----	-----	*Contractor shall submit to the Lab Engr. The proposed job mix formula with supporting design data. Approval is required prior to starting work.
		Verif.*	Proj. Engr. S101, S201, S601	Proj. Engr.	1/JMF	-----	-----	-----	-----	*Dist. Lab verifies % retained coating in accordance with TR 317.
	Anti-Strip Additive %	Accept.	Proj. Engr. S 605	Proj. Engr.	1/2500 tons	*	-----	-----	-----	*% AS from meter.
	Asphalt Cement	Accept.	Proj. Engr. S 605	Proj. Engr.	1/2500 tons	*	-----	-----	-----	*% AC from meter.
	Loose Mixture (Gradation, % AC, & % Crushed)	Quality Control	Contractor S 203 & S 605	Contractor	1/1000 tons	suitable sampling bucket	-----	-----	-----	-----
		Verif.	Proj. Engr. S 203	Proj. Engr.	1/5000 tons	1 gal friction top can	-----	-----	3 days	-----

SECTION 307 PERMEABLE BASES

I-25 2/07

MATERIAL		PURP.	SAMPLED BY / METHOD	TESTED BY	MIN. FREQ.	MIN. QUANT. / CONTAINER	CERT. / DISTR.	SMALL QUANTITY	TYPICAL HANDLING TIME	REMARKS
PERMEABLE CONCRETE BASE (PLANT)	Mix Design	Design/ Accept.	*	Contractor/ Proj. Engr.	1/mix/plant	-----	-----	-----	3 days	*Contractor shall submit to the Lab Engr. the proposed job mix formula with supporting data. Approval is required prior to starting work.
		Verif.	*	Proj. Engr.	1/truck	-----	-----	-----	-----	*Obtain "batch tickets" to verify quantities from mix design.
PERMEABLE BASES	Cross Slope & Grade	Quality Control	Contractor	Contractor	*	-----	-----	-----	-----	*Under thickness shall not exceed 1/2" (12 mm).
		Accept.	Proj. Engr.*	Proj. Engr.	1/day	-----	-----	-----	-----	*Use 10 ft metal static straight edge or approved device.
	Thickness & Width	Quality Control	Contractor	Contractor	*	-----	-----	-----	-----	*Shall measure sufficiently to ensure specifications are met.
		Accept.	Contractor/ Proj. Engr. TR602	Proj. Engr.	1/2000 lin ft	-----	-----	-----	-----	Under thickness shall not exceed 1/2" (12 mm).
	Temperature	Accept.*	Proj. Engr. S 605	Proj. Engr.	1/5000 tons	-----	-----	-----	-----	*Required for Asphaltic Concrete only.
WATER		Accept.	Proj. Engr. S 303		1/source*	1 qt plastic bottle	-----	-----	21 days	*Drinkable water need not be sampled.

I-21 2/07

MATERIAL	PURP.	SAMPLED BY / METHOD	TESTED BY	MIN. FREQ.	MIN. QUANT. / CONTAINER	CERT. / DISTR.	SMALL QUANTITY	TYPICAL HANDLING TIME	REMARKS
NOTE: WHEN A SUBGRADE LAYER IS PRODUCED BY CENTRAL PLANT MIXING, USE THE SAMPLING SCHEDULES IN SECTION 301 OF THIS MANUAL. FOR PLACEMENT AND CONSTRUCTION REFER TO APPLICABLE SECTIONS OF THIS MANUAL.									

SECTION 309 IN-PLACE CEMENT TREATED SUBGRADE

I-22 2/07

MATERIAL		PURP.	SAMPLED BY / METHOD	TESTED BY	MIN. FREQ.	MIN. QUANT. / CONTAINER	CERT. / DISTR.	SMALL QUANTITY	TYPICAL HANDLING TIME	REMARKS
WATER		Accept.	Proj. Engr. S 303	Proj. Engr.	1/source	1 qt plastic bottle	-----	-----	21 days	Drinkable water need not be sampled.

SECTION 401 AGGREGATE SURFACE COURSE

MATERIAL		PURP.	SAMPLED BY / METHOD	TESTED BY	MIN. FREQ.	MIN. QUANT. / CONTAINER	CERT. / DISTR.	SMALL QUANTITY	TYPICAL HANDLING TIME	REMARKS
AGGREGATES	Sand- Clay-Gravel, (Limetreated) Stone, Recycled Portland Cement Concrete, Reclaimed Asphaltic Pavement, Crushed Slag	Accept.	Proj. Engr. S 101	Proj. Engr.	1/1000 yd^3 dedicated stockpile*	1 full sample sack	-----	200 yd^3	5 days (5 weeks for Recycled PCC)	(AML for stone) (RPCC shall be from an approved source) *For sampling on roadway, minimum frequency shall be 1 per 1,000 lin ft per two lanes of roadway or 1 per 2,000 lin ft per shoulder.
AGGREGATES ON ROADWAY	Thickness & Width	Accept.	Proj. Engr. TR 602*	Proj. Engr.	-----	-----	-----	300 lin ft	3 days	*For net section only.
LIME (Hydrated and Quicklime)		Prelim Source Approval	Mfr.	Proj. Engr.	1/quarter	1 gal friction top can or acceptable moisture proof container	-----	-----	-----	(AML)
		Accept.	-----	Proj. Engr.	1/ shipment	-----	CD 1 & 7	-----	-----	(AML)
		Verif.	Proj. Engr. S 102	Proj. Engr.	1/project/ source*	1 gal friction top can	-----	-----	21 days	(AML) *Not required if sampled under another item.
SUBGRADE SOIL (New or Reconstructed	Usable Soil*	Accept.	Proj. Engr. S 401	Proj. Engr.	1/1000 lin ft/ 2-lane rdwy or 1/2000 lin ft shoulder	1 full sample sack	-----	100 yd^3	5 days	*See Specification Section 203.06. For existing shoulder or roadway, no sample is required.
	Density*	Accept.	Proj. Engr. S 401	Proj. Engr	1/1000 lin ft/ 2-lane rdwy or 1/2000 lin ft shoulder	-----	-----	-----	1/2 hr.	*For existing shoulders or roadway, compaction will be to the satisfaction of the Proj. Engr.
WATER		Accept.	Proj. Engr. S 303	Proj. Engr.	1/source*	1 qt plastic bottle	-----	-----	21 days	*Potable water need not be sampled.

SECTION 402 TRAFFIC MAINTENANCE AGGREGATE

I-29 2/07

MATERIAL		PURP.	SAMPLED BY / METHOD	TESTED BY	MIN. FREQ.	MIN. QUANT. / CONTAINER	CERT. / DISTR.	SMALL QUANTITY	TYPICAL HANDLING TIME	REMARKS
AGGREGATES		Accept.	-----	Proj. Engr.	*	-----	-----	-----	-----	*Visual inspection by Proj. Engr.

I-30 2/07

MATERIAL		PURP.	SAMPLED BY / METHOD	TESTED BY	MIN. FREQ.	MIN. QUANT. / CONTAINER	CERT. / DISTR.	SMALL QUANTITY	TYPICAL HANDLING TIME	REMARKS

Section 501 Thin Asphalt Concrete

Material`		Purpose	Sampled by / Method	TESTED BY	MIN. FREQ.	Min Qty / Container	Cert. / Distr.	SMALL QUANTITY	Typical handling time	Remarks
Asphalt Concrete (In-Place)	Longitudinal Surface Tolerance	Quality Control	Contractor TR 644	Contractor	1/job					Contractor to measure prior to laydown. Applies to travel lanes, shoulder, parking, airport runway and taxiway.
		Accept.	Contractor observed by Proj. Engr. TR 644	Contractor observed by Proj. Engr.	1/job	----	----		2 days	Applies to travel lanes. Applies to shoulder, parking, airport runway and taxiway.
	Loose Mixture*	Accept.	Proj. Engr.	Proj. Engr.		----	----		----	*At paver hopper or on roadway
	Thickness & Width	Verif.	Proj. Engr. *	Proj. Engr.	1/lot	----	----		3 days	See E.D.S.M. V.2.2.2
	Yield	Quality Control	Contractor *	Contractor		----	----		----	*Quantity of mixture placed divided by area covered.
Asphaltic	Tack Coat	Prelim. source approval	Refinery			1 Gal plastic bottle	CA		5 Days	(AML) Non Self Certified
Asphalt Concrete Material	Tack Coat Emulsions	Prelim. Source Approval	Refinery S201	Proj. Engr.	1/Project	1 gal plastic bottle	CA 7		5 days	(AML) Non Self Certified Musthave tank approved by Mat. Lab prior to shipping whenever asphalt cement is added or modified.
		Prelim. Source Approval	Refinery S201	Refinery	1/Project	1 gal plastic bottle	CA 7		2 hours during working hours	(AML) Self Certified *Supplier shall sample and test each tank in accordance with quality control plan whenever asphalt cement is added or modified and supply CA to Mat. Lab along with 1 QT sample for veirifcation testing.
		Verif. *	Proj. Engr.	Proj. Engr.	1/Project	2 – 1gal plastic bottles**	CD 1 & 8		5 Days or 10 days if failing or non-verif. Material	* Send 1 gal to Mat. Lab for failing or non Verifying Materials. **Two one-gallon plastic bottles.
	Tack Coat Rate of Application	Accept.	Proj. Engr.	Proj. Engr.	1/Project	------	----		-----	*Undiluted emulsiion gallons, based on meter readings on distributor or spray paver by proj. Engr., divided by sq. yd covered Or using measuring stick per 1000'
	Asphalt Cement	Prelim. Source Approval	Refinery S201	Proj. Engr.		1 qt. friction top can	CA 7		5 days	(AML) Non Self Certified. Must have tank approved by Mat. Lab prior to shipping whenever asphalt cement is added or modified. DOTD results use for approval.
		Prelim. Source Approval	Refinery S201	Refinery		1 qt. friction top can	CA 7		2 hrs during working hours	(AML) Self Certified *Supplier shall sample and test each tank in accordance with quality control plan whenever asphalt cement is added or modified and supply CA to Mat. Lab along with 1 qt sample for verification t4esting. Supplier results used for approval.
		Accept.	Proj. Engr.	Proj. Engr.	1/Transport/ project	1 qt. friction top can	CD 8 & 9		5 days	(AML) One (1) CD to accompany each transport
		Verif.	Proj. Engr.	Proj. Engr.		1 qt. friction top can	----		5 days	(AML) Test original binder DSR including phase angle. If sample does not meet criteria, the plant will be investigated and Dist. Lab will notify the Proj. Engr., the HMA producer and the Mat. Lab. Rotational viscosity to be tested 1/working tank/week for information. A record of results will be kept on file.
		Verif.	Proj. Engr.	Proj. Engr.		1 qt. friction	----		10 days	72 hr. sample

		Verif.	Dist. Lab S 201	Proj. Engr.		1 qt. friction top can	----		10 days	(AML) Send directly to Materials Lab for comparison to refinery sample.

Section 501 Thin Asphalt Concrete

Material`		Purpose	Sampled by / Method	TESTED BY	MIN. FREQ.	Min Qty / Container	Cert. / Distr.	SMALL QUANTITY	Typical handling time	Remarks
FOR PROJECTS OR SEPARATE LOCATIONS WITHIN A PROJECT, REQUIRING LESS THAN 250 TONS, THE JMF, MATERIALS, AND PLANT AND PAVING OPERATIONS SHALL BE SATISFACTORY TO THE ENGINEER.										
Additives	Anti Stripping	Prel. Source Approval	Proj. Engr. S 612	Proj. Engr.		1 pt friction top can	----		10 days	(AML)
		Accept.	Proj. Engr S 601	Proj. Engr.			CD 1&7		10 Days	(AML) *Sample when not accompanied by CD or questionable.
	Fibers (Mineral or Cellulose)	Accept	Proj. Engr. S 601			1 qt friction	CC		10 Days	*Pre-approved by DOTD.
		Accept.	Proj. Engr. S 102			----	CD 1&7		10 Days	(AML) *Not required if sampled under another item. *Sample only if questionable
	Fiber	Accept.	Proj. Engr. S 102	Proj. Engr.	1/shipment*	-----	CA 7 &10	-----	-----	Shipment must be accompanied with a CA Sample only if questionable.
	Hydrated Lime	Prelim. Source Approval	Mfr. S 102			-----	-----	-----	-----	-----
		Accpt	-----			-----	-----	-----	-----	-----
		Verif.	Proj. Engr. S 102			1 gal friction	-----	-----	21 days	(AML) *Not required if sampled under another item.
	Silicon Additive	Accept.	Proj. Engr. S 102			1 pt friction	CA		10 Days	(AML) *Sample only if questionable
Aggregates	Aggregates (Moisture Content)*	Quality Control	Contractor S 101	Contractor	1/day/aggr.	1 gal suitable container	----		----	*For plant control.
	All Aggregates	Design	Proj. Engr. S 101	Proj. Engr.		1 full sample	----		5 days	(AML) Bulk Specific Gravity Gsb
	Coarse Aggregate (+No. 4)	Design	Proj. Engr. S 101	Proj. Engr.		1 full sample sack			5 days	(AML – LA Abrasion) CAA, Flat and Elongated, Insoluble Residue, & Micro Duval (By LTRC)
	Fine Aggregate (-No. 4)	Design	Proj. Engr. S 101	Proj. Engr.		1 full sample sack	---		5 days	Sand Equivalent, FAA
	Natural Sand	Design	Proj. Engr. S 101	Proj. Engr.		1 full sample	---		5 days	Sand equivalent testing.
	Flat & Elongate, Micro Deval	Verifi	Proj. Engr. S 612	Proj. Engr.	1/project	1 full sack			10 days	
	Reclaimed Asphaltic Pavement	Design	Proj. Engr. S 101	Proj. Engr.		3 full sample sacks	---		---	%AC, % crushed and gradation, Effective Specific Gravity G_{se}
	Micro Deval	Accept.	Proj. Engr. S 101	Proj. Engr.	1/project	1 full sack				With CA. Sample when questionable
Asphalt Mix Release Agent		Accept*	----	Proj. Engr.		----	----		----	(AML) *Visual inspection for performance by Proj. Engr.

Asphalt Concrete (Plant)	Anti Strip Additive, %	Accept.	Proj. Engr. S 605	Proj. Engr.		*	----		----	*% AS from meter
	Asphalt Cement, %	Accept.	Proj. Engr. S 605	Proj. Engr.		*	-----		-----	*% AC from meter
	Gyratory Specimens	Quality Control	Contractor S 203	Contractor	1/lot	----	----		----	For % voids on fine and dense mixes only.
		Verif.	Proj. Engr. S 203	Proj. Engr		Suitable sampling	-----		-----	For LWT testing. Samples forwarded to Dist. Lab for transmittal to LTRC.
		Accept.	Proj. Engr.	Mat. Lab		1 full Sack				With CA. Sample when questionable

Section 501 Thin Asphalt Concrete

Material`		Purpose	Sampled by / Method	TESTED BY	MIN. FREQ.	Min Qty / Container	Cert. / Distr.	SMALL QUANTITY	Typical handling time	Remarks
Asphalt Concrete (Plant) (cont'd)	Job Mix Formula (JMF)	Design	-----	Contractor	1/mix type	-----	-----		7 Days	Submit to the Dist. Lab Engr. the proposed job mix formula with supporting design data. Approval is required prior to starting work.
		Verif.		Proj. Engr.	1/mix type	-----	-----		7 Days	*Boil test and aggregate properties by Dist. Lab and LTRC prior to approval of proposed JMF.
		Valid.	Contractor/ Dist. Lab/ Proj. Engr. S 203/S 605	Contractor/ Proj. Engr.	*	-----	-----		-----	*For validation, take 2 samples for first 500 tons of mix, 1 sample for remainder of lot. or max of 2000 tons for G_{mm}, voids, percent AC & gradation.
		Verif.	Contractor/ Dist. Lab S 203	Ind. Lab	1/lot	-----	-----		10 Days	*Two samples per each of three validation sublots. Dist. Lab to submit random four (4) of six (6) gyratory compactor samples to LTRC for LWT testing in accordance with AASHTO T 324.
	Loose Mixture (Asphalt Coating) TR317 Boil Test	Quality Control	Contractor S 203	Contractor	1/lot	1 gal friction	-----		1 day	
		Accept.	Dist. Lab. S 203	Proj. Engr.	1/lot	1 gal friction top can	-----		½ day	
	Loose Mixture (Gradation, %AC and % Crushed)	Quality Control	Contractor S 203	Contractor	1/lot	Suitable sampling container	----		----	
		Accept.*	Dist Lab S 203/S 605	Proj. Engr.	3/lot	Suitable sampling container				
		Verif.	Dist. Lab. S 203	Proj. Engr.		suitably wrapped	----		----	
	Loose Mixture (Moisture Content)	Quality Control	Contractor S 203	Contractor		1 gal friction top can	----		----	
	Loose Mixture* (Temp.)	Quality Control	Contractor S 605	Contractor	1/sublot	----	----		----	*Temperature of mixture at discharge chute.
		Verif.	Proj. Engr. S 605	Proj. Engr.	1/sublot	----	----		----	*Temperature of mixture in truck at plant.
	Loose Mixture (Theo. Max. Spec. Grav.) Gmm	Quality Control	Contractor S 203	Contractor	1/lot	suitable sampling container	----		----	
		Accept.	Proj. Engr.	Proj. Engr.	1/sublot	suitable sampling container				
		Verif.	Proj. Engr. S 203	Proj. Engr.		suitably wrapped	----		----	

MATERIAL		PURP.	SAMPLED BY / METHOD	TESTED BY	MIN. FREQ.	IN. QUAN / CONTAINER	CERT. / DISTR.	SMALL QUANTITY	TYPICAL HANDLING TIME	REMARKS
FOR PROJECTS, OR SEPARATE LOCATIONS WITHIN A PROJECT, REQUIRING LESS THAN 250 TONS, THE JMF, MATERIALS, AND PLANT AND PAVING OPERATIONS SHALL BE SATISFACTORY TO ENGINEER. SEE SUBSECTION 502.14 FOR FURTHER DETAILS.										
ADDITIVES	Anti-Stripping	Prelim Source Approval	Proj. Engr. S 612	Proj. Engr.	1/batch or storage tank	1 pt friction top can	-----	-----	10 days	(AML)
		Accept.	Proj. Engr. S 601	Proj. Engr.	1/shipment/ plant*	1 pt friction	CD 7 &10	-----	10 days	(AML) Shipment must be accompanied with a CD Sample only if questionable.
	Hydrated Lime	Prelim. Source Approval	Mfr. S 102	Proj. Engr.	1/quarter	-----	-----	-----	-----	-----
		Accept.	Proj. Engr. S 102	Proj. Engr.	1/shipment*	-----	CD 7 &10	-----	10 days	(AML) Shipment must be accompanied with a CD Sample only if questionable.
		Verif.	Proj. Engr. S 102	Proj. Engr.	1/project/ source	1 gal friction	-----	-----	21 days	(AML) *Not required if sampled under another item.
	Waste Tire Crumb Rubber	Prelim. Source Approval	Mfr. S 102	Proj. Engr.	1/source/ plant	1 gal friction top can	CA 7 &9	-----	10 days	For rubber to be blended at the plant. Material to be tested for gradation at Materials Lab prior to approval.
		Accept.	Proj. Engr. S 102	Proj. Engr.	1/shipment*	-----	CA 7 &10	-----	-----	Shipment must be accompanied with a CA Sample only if questionable.
	Latex Additive	Prelim. Source Approval	Mfr. S 612	Proj. Engr.	1/source/ plant	1 gal friction top can	CA 7 &10	-----	10 days	For latex to be blended at the plant. Material to be tested at Materials Lab prior to approval.
		Accept.	Proj. Engr. S 601	Proj. Engr.	1/shipment*	-----	CA 7 &10	-----	-----	Shipment must be accompanied with a CA Sample only if questionable.
	Fiber	Accept.	Proj. Engr. S 102	Proj. Engr.	1/shipment*	-----	CA 7 &10	-----	-----	Shipment must be accompanied with a CA Sample only if questionable.
	Warm Mix Additives	Prelim. Source Approval	Proj. Engr. S 612	Proj. Engr.	1/batch or storage tank	1 pt friction top can	-----	-----	10 days	(Approved List)
		Accept.	Proj. Engr. S 601	Proj. Engr.	1/shipment/ plant*	1 pt friction	CA 7 &10	-----	10 days	(Approved List) Shipment must be accompanied with a CA Sample only if questionable.
AGGREGATES	Combined Aggregates (Moisture Content)	Quality Control	Contractor S 101	Contractor	1/day/plant	1 gal suitable container	-----	-----	-----	-----
	All Aggregates	Quality Control	Contractor S 102	Contractor	1/50,000 tons of Mixture/ source /size	3 full sample sacks	-----	-----	-----	(Approved List 2) 1/6 months minimum All consensus properties
	All Aggregates	Design	Proj. Engr. S 101	Proj. Engr.	1/50,000 tons of Mixture/ source /size	3 full sample sacks	-----	-----	28 days	(Approved List 2) 1/6 months minimum All consensus properties
	Reclaimed Asphaltic Pavement (RAP)	Quality Control	Contractor S 101	Contractor	1/stockpile	-----	-----	-----	-----	% AC, % crushed and gradation, Effective Specific Gravity G_{se}.
	Reclaimed Asphaltic Pavement (RAP)	Design	Proj. Engr. S 101	Proj. Engr.	1/stockpile	3 full sample sacks	-----	-----	28 days	% AC, % crushed and gradation, Effective Specific Gravity G_{se}.

SECTION 502 SUPERPAVE ASPHALTIC CONCRETE MIXTURES

MATERIAL		PURP.	SAMPLED BY / METHOD	TESTED BY	MIN. FREQ.	IN. QUANT / CONTAINER	CERT. / DISTR.	SMALL QUANTITY	TYPICAL HANDLING TIME	REMARKS
ASPHALT MIX RELEASE AGENT		Accept.*	-----	Proj. Engr.	-----	-----	-----	-----	-----	(AML) *Visual inspection for performance by Proj. Engr.
ASPHALT CONCRETE (PLANT)	Anti-Strip Additive, %	Quality Control	Contractor S 605	Proj. Engr.	1/2500 tons	*	-----	-----	-----	*% AS from meter.
	Asphalt Cement, %	Quality Control	Contractor S 605	Contractor	1/2500 tons	*	-----	-----	-----	*% AC from meter.
	Gyratory Specimens Moisture Sensitivity LWT	Design	Contractor S 203	Contractor	1/JMF	4 briquettes	-----	-----	-----	Results submitted with JMF.
		Valid.	Proj. Engr. S 203	Proj. Engr./ Contractor	1/JMF	4 briquettes	-----	-----	3 days	Sample and test during validation.
		Quality Control	Contractor S 203	Contractor	1set/20,000 tons	4 briquettes	-----	-----	-----	
	Gyratory Specimens (Volumetric)	Quality Control	Contractor S 203	Contractor	1/1000 tons	-----	-----	-----	-----	
		Valid.	Proj. Engr. S 203	Proj. Engr./ Contractor	1/JMF	6 briquettes	-----	-----	2 days	5 at N_{des}, 1 at N_{max}
	Job Mix Formula (JMF)	Quality Control	-----	Contractor	1/mix type	-----	-----	-----	-----	Contractor shall design and submit to the Dist. Lab Engr. the proposed job mix formula with supporting design data in accordance with the HMAC QA manual.
		Accept.	Proj. Engr.	Proj. Engr.	1/mix type	-----	-----	-----	7 days	Approval is required prior to starting work.
	Loose Mixture (Theoretical Maximum Specific Gravity) G_{mm}	Quality Control	Contractor S 203	Contractor	1/1000 tons	suitable sampling bucket	-----	-----	-----	
		Valid.	Proj. Engr. S 203	Proj. Engr../ Contractor	1/JMF	5/JMF	-----	-----	-----	The average G_{mm} is used for pay determination of roadway cores.
	Loose Mixture (Asphalt Coating)	Design/ Quality Control	Contractor S 203	Contractor	*	1 gal friction top can	-----	-----	-----	*Sample only if coating is questionable.
	Loose Mixture (Gradation, % AC and % Crushed)	Quality Control	Contractor S 203 & S 605	Contractor	1/1000 tons	suitable sampling bucket	-----	-----	-----	Used for PWL calculations
		Valid.	Proj. Engr. S 203	Proj. Engr./ Contractor	1/JMF	5/JMF	-----	-----	-----	Used for PWL calculations on directed sieves.
	Loose Mixture (Moisture Content)	Design/ Quality Control	Contractor S 203	Contractor	1/1000 tons	-----	-----	-----	-----	-----
	Loose Mixture* (Temperature)	Quality Control	Contractor S 605	Contractor	2/sublot	-----	-----	-----	-----	*Temperature of mixture at discharge chute.

SECTION 502 SUPERPAVE ASPHALT CONCRETE MIXTURES (Cont'd)

MATERIAL		PURP.	SAMPLED BY / METHOD	TESTED BY	MIN. FREQ.	IN. QUAN / CONTAINER	CERT. / DISTR.	SMALL QUANTITY	TYPICAL HANDLING TIME	REMARKS
ASPHALTIC CONCRETE (In-Place)	Loose Mixture*	Accept.	Proj. Engr. S 605	Proj. Engr.	2/sublot	-----	-----	-----	-----	*At paver hopper or on roadway.
	Roadway Density (Mainline Roadway Mixes)	**Method 1**								
		Accept.	Contractor/ Proj. Engr. S 203 & S 605	Proj. Engr.	1/2500 ft./lane	6 in. diameter core	-----	-----	2 days *	* Reported 2 days after the verification/quality control core is reported.
		Verif. / Quality Control	Contractor/ Proj. Engr. S 203 & S 606	Contractor	1/7500 ft./lane	6 in. diameter core	-----	-----	-----	Contractor samples at Proj. Engr.'s direction.
		Verif.*	Contractor/ Proj. Engr. S 203 & S 607	Independant Lab	1/7500 ft./lane	6 in. diameter core	-----	-----	-----	*Tested for dispute resolution. Contractor samples at Proj. Engr.'s direction.
		Verif.	Contractor/ Proj. Engr.	Proj. Engr.	1/37,500 ft./lane or **3/37,500 ft./lane	6 in. diameter core	-----	-----	-----	One acceptance core selected at random for the purpose of G_{mm} JMF verification. **For samples outside of tolerance, 2 additonal cores are taken and their results averaged for comparison to JMF.
		Quality Control	Contractor S 605	Contractor	1/2500 ft./lane/paving edge	Non-destructive density reading	-----	-----	-----	3 readings per acceptance core taken at coresponding paving edge and extracted core location.
		Method 2								
		Accept.	Contractor/ Proj. Engr. S 203 & S 606	Contractor	1/2500 ft./lane	6 in. diameter core	-----	-----	-----	Method 2 allowed only with approval of the Dist. Lab
		Verif.	Contractor/ Proj. Engr. S 203 & S 606	Proj. Engr.	1/7500 ft./lane	6 in. diameter core	-----	-----	2 days	Reported 2 days after the contractor acceptance cores are reported.
		Verif.*	Contractor/ Proj. Engr. S 203 & S 607	Proj. Engr.	1/7500 ft./lane	6 in. diameter core	-----	-----	-----	*Tested for dispute resolution. Contractor samples at Proj. Engr.'s direction.Testing site to be determined.
		Verif.	Contractor/ Proj. Engr.	Proj. Engr.	1/37,500 ft./lane or **3/37,500 ft./lane	6 in. diameter core	-----	-----	-----	One acceptance core selected at random for the purpose of G_{mm} JMF verification. **For samples outside of tolerance, 2 additonal cores are taken and their results averaged for comparison to JMF.
		Quality Control	Contractor S 605	Contractor	1/2500 ft./lane/paving edge	Non-destructive density reading	-----	-----	-----	3 readings per acceptance core taken at coresponding paving edge and extracted core location.
	Roadway Density (Minor Mixes)	Tested in accordance with mainline roadway mixes								

SECTION 502 SUPERPAVE ASPHALTIC CONCRETE MIXTURES (Cont'd)

MATERIAL		PURP.	SAMPLED BY / METHOD	TESTED BY	MIN. FREQ.	IN. QUAN / CONTAINER	CERT. / DISTR.	SMALL QUANTITY	TYPICAL HANDLING TIME	REMARKS
ASPHALT CONCRETE (In-Place) (Cont'd)	Transverse Surface Tolerance, Cross Slope and Grade	Quality Control	Contractor S 605	Contractor	2/day*	-----	-----	-----	-----	*As needed to control project within spec. requirements.
		Accept.	Proj. Engr. S 605	Proj. Engr.	1/day*	-----	-----	-----	1 day	*Test at selected locations for conformance to specs.
	Thickness & Width	Accept.	Proj. Engr. TR 602	502.12 Proj. Engr.	*	-----	-----	300 lin ft per location	3 days	Applies to mixtures specified for payment on a cubic yard or square yard basis.
ASPHALT MATERIAL	Asphalt Cement	Prelim. Source Approval	Refinery S 201	Proj. Engr.	1/supplier tank	1 qt friction top can	CA 7	-----	5 days	(AML) Non Self Certified. Must have tank approved by Mat. Lab prior to shipping whenever asphalt cement is added or modified. DOTD results use for approval.
		Prelim. Source Approval	Refinery S 201	Refinery	1/supplier tank or as directed by the Mat. Lab	1 qt friction top can	CA 7	-----	2 hrs during working hours	(AML) Self Certified. Supplier, shall sample and test each tank in accordance with quality control plan whenever asphalt cement is added or modified, and supply CA to Mat. Lab along with 1 qt sample for verification testing, or as directed by the Mat. Lab. Supplier results used for approval.
		Verif.	Proj. Engr.	Proj. Engr.	1/plant working tank/grade visit	2 - 1 qt friction top cans	-----	-----	5 days	(AML) Test original binder DSR, including phase angle, and Rotational Viscosity. If sample does not meet criteria, the plant will be investigated and the Dist. Lab will notify the Proj. Engr., the HMA producer and the Mat. Lab.
		Verif.	Proj. Engr. S 201	Proj. Engr.	1 transport and working tank/ grade/ visit	1 qt friction top can (each)	-----	-----	10 days	(AML) Send directly to Materials Lab for comparison to refinery sample.
	Curing Membrane	**SEE SECTION 506 OF THIS MANUAL**								
	Prime Coat	**SEE SECTION 505 OF THIS MANUAL**								
	Tack Coat	**SEE SECTION 504 OF THIS MANUAL.**								
ASPHALT MATERIAL (Surface Tolerance)	Longitudinal Surface Tolerance	Quality Control	Contractor TR 644	Contractor	each wheelpath *	-----	-----	-----	-----	* Tested within 7 calendar days of placement. Applies to mainline courses.
		Accept.	Contractor, Observed by Proj. Engr. TR 644	Contractor observed by Proj. Engr.	each lane for length of project	-----	-----	-----	2 days	Applies to mainline courses.
		Accept.	Contractor, Observed by Proj. Engr. TR 644	Contractor observed by Proj. Engr.	1/project	-----	-----	-----	1 days	Applies to minor mixes for shoulders, bike paths, detour roads, and parking lots.
ASPHALT TACK COAT	Emulsified Asphalt	Prelim. Source Approval	Refinery S 201	Proj. Engr.	1/storage tank	1 gal plastic bottle	CA 7	-----	5 days	(AML) Non Self Certified Must have tank approved by Mat. Lab prior to shipping whenever asphalt cement is added or modified.
		Prelim. Source Approval	Refinery S 201	Refinery	1/supplier tank whenever asphalt is added to tank or modified*	1 gal plastic bottle	CA 7	-----	2 hrs during working hours	(AML) Self Certified *Supplier, shall sample and test each tank in accordance with quality control plan whenever asphalt cement is added or modified and supply CA to Mat. Lab along with 1 qt sample for verification testing.
		Accept.	-----	Proj. Engr.	1/shipment*	1 gal plastic bottle	CD 1 & 7	No CD required if less than 250	-----	(AML) *Visual inspection by Proj. Engr. Sample only if questionable.

	Rate of Application	Accept.	Proj. Engr.	Proj. Engr.	1/day	-----	-----	-----	-----	-----

SECTION 504

MATERIAL		PURP.	SAMPLED BY / METHOD	TESTED BY	MIN. FREQ.	IN. QUAN / CONTAINER	CERT. / DISTR.	SMALL QUANTITY	TYPICAL HANDLING TIME	REMARKS
THIS SECTION IS TO BE USED AS A GUIDE FOR OTHER ITEM NUMBERS WHEN REFERENCE IS MADE TO SECTION 504 OF THIS MANUAL. THERE ARE NO PAY ITEMS UNDER SECTION 504.										
ASPHALT TACK COAT	Emulsified Asphalt	Prelim. Source Approval	Refinery S 201	Proj. Engr.	1/storage tank	1 gal plastic bottle	CA 7	-----	5 days	(AML) Non Self Certified Must have tank approved by Mat. Lab prior to shipping whenever asphalt cement is added or modified.
		Prelim. Source Approval	Refinery S 201	Refinery	1/supplier tank whenever asphalt is added to tank or modified*	1 gal plastic bottle	CA 7	-----	2 hrs during working hours	(AML) Self Certified *Supplier, shall sample and test each tank in accordance with quality control plan whenever asphalt cement is added or modified and supply CA to Mat. Lab along with 1 qt sample for verification testing.
		Accept.	-----	Proj. Engr.	1/shipment*	1 gal plastic bottle	CD 1 & 7	No CD required if less than 250	-----	(AML) *Visual inspection by Proj. Engr. Sample only if questionable.
	Rate of Application	Accept.	Proj. Engr.	Proj. Engr.	1/day	-----	-----	-----	-----	-----

SECTION 505 ASPHALTIC PRIME COAT

MATERIAL		PURP.	SAMPLED BY / METHOD	TESTED BY	MIN. FREQ.	IN. QUAN / CONTAINER	CERT. / DISTR.	SMALL QUANTITY	TYPICAL HANDLING TIME	REMARKS
THIS SECTION IS TO BE USED AS A GUIDE FOR OTHER ITEM NUMBERS WHEN REFERENCE IS MADE TO SECTION 505 OF THIS MANUAL. THERE ARE NO PAY ITEMS UNDER SECTION 505.										
ASPHALT PRIME COAT	Cutback	Prelim. Source Approval	Refinery S 201	Proj. Engr.	1/storage tank	1 qt screw top can	CA 7	-----	5 days	(AML) Non Self Certified Must have tank approved by Mat. Lab prior to shipping whenever asphalt cement is added or modified.
		Prelim. Source Approval	Refinery S 201	Refinery	1/supplier tank whenever asphalt is added to tank or modified*	1 qt screw top can	CA 7	-----	2 hrs. during working hours	(AML) Self Certified *Supplier, shall sample and test each tank in accordance with quality control plan whenever asphalt cement is added or modified and supply CA to Mat. Lab along with 1 qt sample for verification testing.
		Accept.	-----	Proj. Engr.	1/shipment*	1 qt screw top can	CD 1 & 7	500 gal	-----	(AML) *Visual inspection by Proj. Engr. Sample only if questionable.
	Emulsified Asphalt	Prelim. Source Approval	Refinery S 201	Proj. Engr.	1/storage tank	1 gal plastic bottle	CA 7	-----	5 days	(AML) Non Self Certified Must have tank approved by Mat. Lab prior to shipping whenever asphalt cement is added or modified.
		Prelim. Source Approval	Refinery S 201	Refinery	1/supplier tank whenever asphalt is added to tank or modified*	1 gal plastic bottle	CA 7	-----	2 hrs. during working hours	(AML) Self Certified *Supplier, shall sample and test each tank in accordance with quality control plan whenever asphalt cement is added or modified and supply CA to Mat. Lab along with 1 qt sample for verification testing.
		Accept.	-----		1/shipment*	1 gal plastic bottle	CD 1 & 7	500 gal	-----	(AML) *Visual inspection by Proj. Engr. Sample only if questionable.

	Rate of Application	Accept.	Proj. Engr.	Proj. Engr.	1/day	-----	-----	-----	-----	-----

SECTION 506 ASPHALTIC CURING MEMBRANE

MATERIAL		PURP.	SAMPLED BY / METHOD	TESTED BY	MIN. FREQ.	IN. QUAN / CONTAINER	CERT. / DISTR.	SMALL QUANTITY	TYPICAL HANDLING TIME	REMARKS
THIS SECTION IS TO BE USED AS A GUIDE FOR OTHER ITEM NUMBERS WHEN REFERENCE IS MADE TO SECTION 506 OF THIS MANUAL. THERE ARE NO PAY ITEMS UNDER SECTION 506.										
ASPHALT CURING MEMBRANE	Emulsified Asphalt	Prelim. Source Approval	Refinery S 201	Proj. Engr.	1/storage tank	1 gal plastic bottle	CA 7	-----	5 days	(AML) Non Self Certified Must have tank approved by Mat. Lab prior to shipping whenever asphalt cement is added or modified.
		Prelim. Source Approval	Refinery S 201	Refinery	1/supplier tank whenever asphalt is added to tank or modified*	1 gal plastic bottle	CA 7	-----	2 hrs. during working hours	(AML) Self Certified *Supplier, shall sample and test each tank in accordance with quality control plan whenever asphalt cement is added or modified and supply CA to Mat. Lab along with 1 qt sample for verification testing.
		Accept.	-----	Proj. Engr.	1/shipment*	1 gal plastic bottle	CD 1 & 7	250 gal	-----	(AML) *Visual inspection by Proj. Engr.. Sample only if questionable.
	Emulsified Petroleum Resin	Prelim. Source Approval	Refinery S 201	Proj. Engr.	1/storage tank	1gal plastic bottle	CA 7	-----	5days	(AML) Non Self Certified Must have tank approved by Mat. Lab prior to shipping whenever asphalt cement is added or modified.
		Prelim. Source Approval	Refinery S 201	Refinery	1/supplier tank whenever asphalt is added to tank or modified*	1 gal plastic bottle	CA 7	-----	2 hrs. during working hours	(AML) Self Certified *Supplier, shall sample and test each tank in accordance with quality control plan whenever asphalt cement is added or modified and supply CA to Mat. Lab along with 1 qt sample for verification testing.
		Accept.	-----	Proj. Engr.	1/shipment*	1 gal plastic bottle	CD 1 & 7	250 gal	-----	(AML) *Visual inspection by Proj. Engr.. Sample only if questionable.
	Rate of Application	Accept.	Proj. Engr.	Proj. Engr.	1 day	-----	-----	-----	-----	-----
	Water	Accept.	Proj. Engr. S 301	Proj. Engr.	1/source	1 qt plastic bottle	-----	250 gal	11 days	Drinkable water need not be sampled.

SECTION 507 ASPHALTIC SURFACE TREATMENT

MATERIAL		PURP.	SAMPLED BY / METHOD	TESTED BY	MIN. FREQ.	IN. QUAN / CONTAINER	CERT. / DISTR.	SMALL QUANTITY	TYPICAL HANDLING TIME	REMARKS
AGGREGATES	Rate of Application	Quality Control	Contractor	Contractor	Prior to first pass of aggregate spreader*	-----	-----	-----	-----	*Must check sufficient to ensure materials being applied meet specification requirements.
		Accept.	Proj. Engr.	Proj. Engr.	First pass of aggregate spreader*	-----	-----	-----	1 day	*Must check sufficient to ensure materials being applied meet specification requirements.
	Size 1,2,3 (for cold application)	Accept.	Proj. Engr. S 101	Proj. Engr.	1/1000yd^3/ size	1 full sample sack	CA 1	2,000 yd^2	5 days	(AML)
	Size 1,2,3 (for hot application)	Quality Control	Contractor S 101	Contractor	Sufficient to ensure quality	1 full sample sack	CA 1	2,000 yd^2	-----	(AML) Certification from supplier for asphalt coating & gradation.

SECTION 507 ASPHALTIC SURFACE TREATMENT

MATERIAL		PURP.	SAMPLED BY / METHOD	TESTED BY	MIN. FREQ.	IN. QUAN / CONTAINER	CERT. / DISTR.	SMALL QUANTITY	TYPICAL HANDLING TIME	REMARKS
ASPHALT MATERIAL	Emulsified Asphalt	Prelim. Source Approval	Refinery S 201	Proj. Engr.	1/storage tank	1 gal plastic bottle	CA 7	-----	5 days	(AML) Non Self Certified Must have tank approved by Mat. Lab prior to shipping whenever asphalt cement is added or modified.
		Prelim. Source Approval	Refinery S 201	Refinery	1/supplier tank whenever asphalt is added to a tank or modified*	2-1 gal plastic bottles	CA 7	-----	2 hrs. during working hours	(AML) Self Certified *Supplier, shall sample and test each tank in accordance with quality control plan whenever asphalt cement is added or modified and supply CA to Mat. Lab along with 1 qt sample for verification testing.
		Accept.*	Proj. Engr. S 201	Dist. Lab/Mat. Lab if failing or non-verif. material	1/transport or storage tank	2 gal plastic bottle**	CD 1 & 8	-----	5 days or 10 days if failing or non-verif. material	(AML) *Send 1 gal to Mat. Lab for failing or nonverifying material. **Two one-gallon plastic bottles.
		Accept.	*	Proj. Engr.	1/type/ project**	1 gal plastic bottle	-----	2,000 yd^2	10 days	(AML) For complete analysis. *Shall be selected at random by the Dist. Lab from the acceptance samples submitted by the Proj. Engr. **Not required if sampled under another item.
	Rate of Application	Accept.	Proj. Engr. 507.06(a)	Proj. Engr.	1/each pass of distributor	-----	-----	-----	1 day	-----
	Asphalt Cement	Prelim. Source Approval	Refinery S 201	Proj. Engr.	1/supplier tank	1 qt friction top can	CA 7	-----	5 days	(AML) Non Self Certified. Must have tank approved by Mat. Lab prior to shipping whenever asphalt cement is added or modified. DOTD results use for approval.
		Prelim. Source Approval	Refinery S 201	Refinery	1/supplier tank whenever asphalt is added to a tank or modified*	1 qt friction top can	CA 7	-----	2 hrs. during working hours	(AML) Self Certified *Supplier, shall sample and test each tank in accordance with quality control plan whenever asphalt cement is added or modified and supply CA to Mat. Lab along with 1 qt sample for verification testing.
		Accept.*	Proj. Engr. S 201	Proj. Engr.	1/transport or storage tank	2-1qt friction top can	CD 1 & 8	-----	5 days or 10 days if failing or non-verif. material	(AML) *Send 1qt. to Mat. Lab for failing or nonverifying material.
		Accept.	*	Proj. Engr.	1/type/ project**	1 qt friction top can	-----	2,000 yd^2	10 days	(AML) For complete analysis. *Shall be selected at random by the Dist. Lab from the acceptance samples submitted by the Proj. Engr. **Not required if sampled under another item.
	Rate of Application	Accept.	Proj. Engr. 507.06(a)	Proj. Engr.	1/each pass of distributor	-----	-----	-----	1 day	-----

SECTION 508 STONE MATRIX ASPHALT

MATERIAL		PURP.	SAMPLED BY / METHOD	TESTED BY	MIN. FREQ.	IN. QUAN / CONTAINER	CERT. / DISTR.	SMALL QUANTITY	TYPICAL HANDLING TIME	REMARKS
ADDITIVES	Anti-Stripping	Prelim. Source Approval	Proj. Engr. S 612	Proj. Engr.	1/batch or storage tank	1 pt friction top can	-----	-----	10 days	(AML)
		Accept.	Proj. Engr. S 601	Proj. Engr.	1/shipment/ plant*	1 pt friction	CD 1 & 7	250 tons per location	10 days	(AML) *Sample when not accompanied by CD or questionable.
	Mineral Filler	Accept.	Proj. Engr. S 102	Proj. Engr.	1/500 tons*	1 gal friction top can	-----	-----	-----	(AML) *Sampling not required for Portland cement or hydrated lime when accompanied by CD.
	Fibers (Mineral or	Accept.	Proj. Engr. S 601		1/shipment*	1 qt friction	CC	-----	10 days	*Pre-approved by DOTD
AGGREGATES	Combined Aggregates (Moisture Content)	Quality Control	Contractor S 101	Contractor	1/day/plant	1 gal suitable container	-----	-----	-----	
	All Aggregates	Verif.	Proj. Engr. S101		1/source/ plant/size	1 full sample	-----	-----	5 days	(AML) Bulk Specific Gravity Gsb.
	Coarse Aggregates (+ No. 4)	Verif.	Proj. Engr. S 101		1/source/ plant/size	1 full sample sack	-----	-----	5 days	Flat & Elongated.
	Fine Aggregate (- No. 4)	Accept./ Design	Proj. Engr. S 601	Proj. Engr.	1/source/ plant	1 full sample sack	-----	-----	5 days	Fine Aggregate Angularity.
ASPHALT MIX RELEASE AGENT		Accept.*	-----	Proj. Engr.	-----	-----	-----	-----	-----	(AML) *Visual inspection for performance by Proj Engr.
ASPHALT CONCRETE (PLANT)	Anti-Strip Additive, %	Accept.	Proj. Engr. S 605	Proj. Engr.	1/sublot	*	-----	-----	-----	*Range given on JMF, % AS from meter. See QA Manual.
	Asphalt Cement, %	Quality Control	Contractor S 605	Proj. Engr.	1/sublot	*	-----	-----	-----	*% AC from meter or scales. See QA Manual.
	Gyratory Specimens (Moisture Sensitivity) (TSR) (Lottman)	Design	Contractor S 203	Contractor	1 set/JMF	6 briquettes / set	-----	-----	-----	Results submitted with JMF.
		Valid.	S203	Contractor	1 set/JMF	6 briquettes	-----	-----	-----	Sampled on first production day after validation witnessed by Department.
	Gyratory Specimens Volumetric	Quality Control	Contractor S203	Contractor	2/sublot	-----	-----	-----	-----	Aged or unaged$_{max}$.
		Accept.	Proj. Engr. S 203 & S 605	Proj. Engr.	1/sublot	suitable sampling bucket	-----	-----	1 day	Aged N_{design}.
		Verif.	Proj. Engr.	Proj. Engr.	1/lot	suitably wrapped	-----	-----	5 days	Shall be an acceptance sample representing each lot of plant operation.

SECTION 508 STONE MATRIX ASPHALT (Cont'd)

MATERIAL		PURP.	SAMPLED BY / METHOD	TESTED BY	MIN. FREQ.	IN. QUANT / CONTAINER	CERT. / DISTR.	SMALL QUANTITY	TYPICAL HANDLING TIME	REMARKS
ASPHALT CONCRETE (Plant) (Cont'd)	Job Mix Formula (JMF)	Design	-----	Contractor	1/mix type/plant				10 days	Contractor shall submit to the Proj. Engr. the proposed job mix formula with supporting design data. Approval by the Dist. Lab Engr. is required prior to starting work.
		Vaild.	Contractor & Proj. Engr.	Contractor Proj. Engr.	1/JMF	-----	-----	-----	-----	Five (5) samples on 1st days production or max. 2,000 tons for validation.
	Loose Mixture (Maximum Theoretical Specific Gravity) G_{mm}	Quality Control	Contractor S 203	Contractor	2/sublot	suitable sampling bucket	-----	-----	1 day	Aged or Unaged. May use 1 QA in lieu of 1 QC.
		Accept.	Proj. Engr. S 203	Proj. Engr.	1/sublot	suitable sampling bucket	-----	-----	1 day	-----
	Loose Mixture (Asphalt Coating)	Design/ Quality Control	Contractor S 203	Contractor	1/JMF*	1 gal friction top can	-----	-----	-----	*Sample only if coating is questionable.
		Accept.	Proj. Engr. S 203	Proj. Engr.	1/JMF*	1 gal friction top can	-----	-----	1 day	*Sample only if coating is questionable.
	Loose Mixture (Asphalt Draindown)	Design	Contractor	Contractor	1/JMF	1 gal friction	-----	-----	-----	-----
		Accept.	Proj. Engr. S 203	Proj. Engr.	1/lot	1 gal friction top can	-----	-----	-----	-----
	Loose Mixture (Gradation)	Quality Control	Contractor S 203 & S 605	Contractor	1/sublot	suitable sampling bucket	-----	-----	-----	-----
		Accept.	Proj. Engr. S 203 & S 605	Proj. Engr.	1/sublot	-----	-----	-----	1 day	-----
	Loose Mixture*	Quality Control	Contractor S 605	Contractor	2/sublot	-----	-----	-----	-----	*Temperature of mixture at discharge chute.
		Accept.	Proj. Engr. S 605	Proj. Engr.	1/sublot*	-----	-----	-----	1 day	*Temperature of mixture in truck at plant.
	Density	Accept.	Proj. Engr. S 203 & S 605	Proj. Engr.	3/sublot	4 or 6 in. diameter core	-----	-----	1 day	-----
		Verif.	Proj. Engr. S 203 & S 605	Proj. Engr.	1/sublot	4 or 6 in. diameter core	-----	-----	5 days	-----

SECTION 508 STONE MATRIX ASPHALT (Cont'd)

MATERIAL		PURP.	SAMPLED BY / METHOD	TESTED BY	MIN. FREQ.	IN. QUAN / CONTAINER	CERT. / DISTR.	SMALL QUANTITY	TYPICAL HANDLING TIME	REMARKS
ASPHALT CONCRETE (Roadway, In-Place)	Longitudinal Surface Tolerance	Quality Control	Contractor TR 644	Contractor	each wheelpath segment	-----	-----	-----	-----	Applies to travel lane wearing and binder. Applies to shoulder, parking, airport runway and taxiway wearing.
		Accept.	Contractor observed by Proj. Engr.	Contractor observed by Proj. Engr.	each sublot	-----	-----	-----	2 days	Applies to travel lane, wearing and center two lanes for airport.
	Loose Mixture* (Temperature)	Accept.	Proj. Engr.	Proj. Engr.	2/sublot	-----	-----	-----	1 day	*Temperature of mixture at entry of MTV.
	Transverse Surface Tolerance, Cross Slope and Grade	Quality Control	Contractor S 605	Contractor	2/day*	-----	-----	-----	-----	* As needed to control project within specification requirements.
		Accept.	Proj. Engr. S 605	Proj. Engr.	1/day*	-----	-----	-----	1 day	*Test at selected locations for conformance to specifications.
	Thickness & Width	Accept.	Proj. Engr.	Proj. Engr.	*	-----	-----	300 lin ft per location	3 days	*Applies to mixture for payment on a cubic yd or sq yd basis.
ASPHALT MATERIAL	Asphalt Cement (PG 76-22M)	Prelim. Source Approval	Refinery S 201	Proj. Engr.	1/supplier tank	1 qt friction top can	CA 7	-----	5 days	(AML) Non Self Certified Must have tank approved by Mat. Lab prior to shipping whenever asphalt cement is added or modified. DOTD results used for approval.
		Prelim. Source Approval	Refinery S 201	Refinery	1/supplier tank	1 qt friction top can	CA 7	-----	2 hrs during working hours	(AML) Self Certified Supplier, shall sample and test each tank in accordance with quality control plan whenever asphalt cement is added to
		Accept.	-----	Proj. Engr.	-----	-----	CD 8 & 9	-----	5 days	(AML) One CD to accompany each transport.
		Verif.	Proj. Engr. S 201	Proj. Engr.	1/plant working tank/day of	1 qt friction top can	-----	-----	5 days	(AML) Test original binder DSR, including Phase Angle. If sample does not meet criteria, the plant will investigated and the
		Verif.	Proj. Engr. S 201	Proj. Engr.	1 working tank	1 qt friction top can	-----	-----	10 days	Sample after 72 hour shut down period.
		Verif.	Proj. Engr.	Proj. Engr.	1 transport/ project /grade	1 qt friction top can	-----	-----	10 days	(AML) Send directly to Materials Lab for comparison to refinery sample.
	Tack Coat	**SEE SECTION 504 OF THIS MANUAL.**								

SECTION 509 COLD PLANING ASPHALTIC PAVEMENT

MATERIAL		PURP.	SAMPLED BY / METHOD	TESTED BY	MIN. FREQ.	IN. QUANT / CONTAINER	CERT. / DISTR.	SMALL QUANTITY	TYPICAL HANDLING TIME	REMARKS
COLD PLANED SURFACE	Longitudinal Surface Tolerance* (for single lift overlays only)	Quality Control	Contractor TR 644	Contractor	each wheelpath segment	-----	-----	2,000 yd^2	-----	*When a single lift is to be placed over the cold planed surface it must meet the requirements of binder course in Section 502 of this Manual. See table 502-8b.
	Transverse Surface Tolerance, Cross Slope and Grade*	Quality Control	Contractor	Contractor	2/day*	-----	-----	-----	-----	*As needed to meet requirements of binder. See table 502-4
TEMPORARY PAVEMENT MARKING	**SEE SECTION 713 OF THIS MANUAL.**									

SECTION 510 ASPHALT CONCRETE PAVEMENT PATCHING, WIDENING AND JOINT REPAIR

MATERIAL		PURP.	SAMPLED BY / METHOD	TESTED BY	MIN. FREQ.	IN. QUANT / CONTAINER	CERT. / DISTR.	SMALL QUANTITY	TYPICAL HANDLING TIME	REMARKS
ASPHALT CONCRETE				**For details on Additives, Aggregates, Asphalt Cements, Asphaltic Concrete, Asphaltic Tack Coat, Asphalt Mix Release Agent and Mineral Filler, See Section 502 of this Manual.**				-----	-----	-----
	Density	Accept.	Proj. Engr. S 203	Proj. Engr.	3/sublot	4 or 6 in. diameter core		-----	1 day	Top 4 inches of finished section.

SECTION 601 PORTLAND CEMENT CONCRETE PAVEMENT

MATERIAL		PURP.	SAMPLED BY / METHOD	TESTED BY	MIN. FREQ.	MIN. QUANT. / CONTAINER	CERT. / DISTR.	SMALL QUANTITY	TYPICAL HANDLING TIME	REMARKS
FOR DETAILS ON CONCRETE MIX DESIGNS, TESTS AND MATERIALS, SEE SECTION 901 OF THIS MANUAL.										
ADHESIVE-LUBRICANT	For Preformed Elastomeric Compression Joint Seal	Accept.	Proj. Engr. S 601	Proj. Engr.	1/lot or shipment	1 qt friction top can	-----	2,000 yd^2 PCCP	10 days	(AML) Mix well before sampling. Seal can tightly.
BOLSTER BLOCKS	Concrete	**SEE SECTION 901 OF THIS MANUAL. (CLASS A STRUCTURAL OR PAVEMENT TYPE)**								
CONCRETE-CURED	Cores - Thickness & Compressive Strength	Accept.	Contractor/ Dist. Lab. TR 225	Proj. Engr.	5/lot	5 cores*	-----	less than 2,000yd^2 make cylinders an record depth measurement	dependent upon completion of lot & curing min. 3 days	*Contractor shall notify the Dist. Lab Engr. at least five (5) days prior to the start of coring operations. See "Application of Quality Assurance Specifications for Portland Cement Concrete Pavement and Structures" for details. For pavement plan thickness 10.0 inches (250 mm) or less, 4" diameter (nominal) cores may be used.
	Surface Tolerance	Quality Control	Contractor TR 644	Contractor	As needed at the contractor's discretion	entire lot	-----	-----	-----	Contractor must furnish an approved inertial profilograph and approved 10 ft metal static straightedge. To be tested as soon as concrete has hardened.
		Accept.	Contractor/Project Engr. TR 644	Proj. Engr.	1/Lane/Project	entire lot	-----	-----	2 days	Travel lane and associated pavement will be tested after quality control testing and corrective work completed by contractor.
	Tine Texturing	Accept.	Proj. Engr. TR 229	Proj. Engr.	2/lot*	-----	-----	-----	1 day	*See DOTD TR 229.
CONCRETE-PLASTIC	Compressive Strength	Accept.*	Proj. Engr. S 301 TR 226	Proj. Engr.	3 cyl/pour/ 100yd^3 max.	6 in. x 12 in. cylinder mold	-----	-----	30 days	*For small quantity pavements and projects with less than 2000 yd^2.
		*	Proj. Engr. S 301 TR 226	Proj. Engr.	1 set of 3 cyl/location/ day	6 in. x 12 in. cylinder mold	-----	-----	1 day	*Used to determine early opening date for traffic or construction equipment.
	Thickness	Quality Control	Contractor	Contractor	*	-----	-----	-----	-----	*For small quantity pavements and projects with less than 2000 yd^2.
		Accept.	Proj. Engr.	Proj. Engr.	*	-----	-----	-----	1 day	*For small quantity pavements and projects with less than 2000 yd^2.
CURING MATERIALS	Moist Cure Materials	Accept.	Proj. Engr. S 601	Proj. Engr.	1/shipment*	36 in. x 36 in.	-----	-----	10 days	*Visual inspection by Proj. Engr. Sample only if questionable.
CURING MATERIALS (Cond't)	Liquid Membrane Forming Compound	Prelim. Source Approval	Mfr. S 601	Proj. Engr.	1/6 months	1 qt friction top can	-----	-----	21 days	(AML)
		Accept.	Proj. Engr. S 601	Proj. Engr.	1/shipment*	1 qt friction top can	CC 1	-----	10 days	(AML) *Visual inspection by Project Engr. Sample only if questionable.

SECTION 601 PORTLAND CEMENT CONCRETE PAVEMENT (Cont'd)

MATERIAL		PURP.	SAMPLED BY / METHOD	TESTED BY	MIN. FREQ.	MIN. QUANT. / CONTAINER	CERT. / DISTR.	SMALL QUANTITY	TYPICAL HANDLING TIME	REMARKS
EPOXY RESIN SYSTEMS	Type I, Grade C	Accept.	Proj. Engr. S 601	Proj. Engr.	1/lot or shipment	1 qt each component friction top	CC 1	50 lin ft of joint	11 days	(AML) Visual inspection by Proj. Engr. Sample only if questionable.
GEOTEXTILE FABRIC		Accept.	Proj. Engr. S 601	Proj. Engr.	1/type/ source/ shipment	3 lin ft/roll width of fabric*	CC 1	150 yd^2 of fabric	10 days	(AML) *Sample a minimum of 18 ft2.
JOINT FILLERS (Cond't)	Preformed Polyurethane Foam	Accept.	Proj. Engr. S 601	Proj. Engr.	1/5000 lin ft/ type	36 in. length	-----	2,000 yd^2 PCCP	10 days	-----
	Wood	Accept.	Proj. Engr. S 601	Proj. Engr.	1/5000 lin ft	36 in. length	-----	2,000 yd^2 PCCP	10 days	-----
JOINT FORMER/ SEALER	Preformed Joint Former/ Sealer	Accept.	Proj. Engr. S 601	Proj. Engr.	1/5000 lin ft	6 ft length	-----	2,000 yd^2 PCCP	11 days	-----
JOINT SEALANT (Extruded)	Silicone Polymer (single or two-component rapid cure)	Prelim. Source Approval	Proj. Engr. S 611	Proj. Engr.	1/batch or shipment	1 gal friction top can	CA 7	-----	30 days	(AML)
		Accept.	Proj. Engr. S 611	Proj. Engr.	1/shipment*	1 gal friction top can	CD 1 & 7	2,000 yd^2 PCCP	30 days	(AML) *Sample only if questionable.
		Accept.*	Proj. Engr. S 611	Proj. Engr.	1/batch or shipment	1 gal friction top can	CA 7	2,000 yd^2 PCCP	30 days	(AML) *When material is not accompanied by a CD.
JOINT SEALANT (Hot Poured)	Rubberized Asphaltic Type	Prelim. Source Approval	Proj. Engr. S 611	Proj. Engr.	1/batch or shipment	one container	CA 7	-----	11 days	(AML)
		Accept.	Proj. Engr. S 611	Proj. Engr.	1/shipment*	one container	CD 1 & 7	2,000 yd^2 PCCP	11 days	
		Accept.*	Proj. Engr. S 611	Proj. Engr.	1/batch or shipment	one container	CA 7	2,000 yd^2 PCCP	11 days	(AML) *When material is not accompanied by a CD.
JOINT SEALANT (Backing Material)	Rods	Accept.	-----	Proj. Engr.	-----	-----	-----	-----	-----	(AML) For use with polyurethane silicone polymer joint seals. Visual inspection by Proj. Engr.
	Rods (Heat Resistant)	Accept.	-----	Proj. Engr.	-----	-----	-----	-----	-----	(AML) For use with Hot poured joint sealants. Visual inspection by Proj. Engr.
JOINT SEALANTS (Primer)		Accept.	-----	Proj. Engr.	-----	-----	-----	-----	-----	(AML) For use with polyurethane and silicone polymers joint sealants. Visual inspection by Proj. Engr.
JOINT SEAL (Preformed)	Elastomeric Compression	Accept.	Proj. Engr. S 601	Proj. Engr.	1/lot or shipment	8 ft length	CA 7	2,000 yd^2 PCCP	14 days	(AML) Proj. Engr. forwards CA with sample to Mat. Lab.
LIME	Hydrated	Accept.	-----	Proj. Engr.	1/shipment	-----	CD 1	-----	-----	(AML) Visual inspection by Proj. Engr.

SECTION 601 PORTLAND CEMENT CONCRETE PAVEMENT (Cont'd)

MATERIAL		PURP.	SAMPLED BY / METHOD	TESTED BY	MIN. FREQ.	MIN. QUANT. / CONTAINER	CERT. / DISTR.	SMALL QUANTITY	TYPICAL HANDLING TIME	REMARKS
LUBRICANT-ADHESIVE		Accept.	-----	Proj. Engr.	-----	-----	-----	-----	-----	(AML) For use with preformed polyurethane foam joint seal. Visual inspection by Proj. Engr.
NON-SHRINK PATCHING SYSTEM	Non-Shrink Grout	Accept.	Proj. Engr. S 601	Proj. Engr.	1/source	1 sack	-----	20 sacks	16 days	(AML) Sample shall be submitted in an unbroken moisture proof sack.
REINFORCEMENT	Adhesive Anchor System	Accept.	Proj. Engr. S 501	Proj. Engr.	1/type	-----	-----	2,000 yd^2 PCCP	12 days	(AML)
	Dowel Bars	Accept.	Proj. Engr. S 501	Proj. Engr.	1/shipment	2 bars *	-----	2,000 yd^2 PCCP	9 days	*For mechanical placement, only one dowel bar required. Basket assemblies checked for dimensional conformance by Proj. Engr.
	Mechanical Butt Splicing Devices	Accept.	Proj. Engr. S 501	Proj. Engr.	1/size/ shipment	-----	-----	2,000 yd^2 PCCP	9 days	(AML)
	Tie Bars	Accept.	Proj. Engr. S 501	Proj. Engr.	1/size/grade/ 150,000lb/ source*	2 bars	CA 1	2,000 yd^2 PCCP	9 days	*If listed on AML, material with a CA (Distr. 1) need not be sampled. Sample if questionable.
TAR PAPER		Accept.	Proj. Engr. S 601	Proj. Engr.	1/source*	2 ft x 2 ft	-----	-----	9 days	For Bolster Blocks. *Visual inspection by Proj. Engr. Sample only if questionable.

SECTION 602 PORTLAND CEMENT CONCRETE PAVEMENT REHABILITATION

MATERIAL		PURP.	SAMPLED BY / METHOD	TESTED BY	MIN. FREQ.	MIN. QUANT. / CONTAINER	CERT. / DISTR.	SMALL QUANTITY	TYPICAL HANDLING TIME	REMARKS
FOR DETAILS ON CONCRETE MIX DESIGNS, TESTS AND MATERIALS, FLY ASH. SEE SECTION 901 OF THIS MANUAL. EACH REHABILITATION ITEM WILL SPECIFY THE SPECIFIC TYPE OF MATERIALS TO BE USED.										
CONCRETE-CURED	Surface Tolerance (Grinding)	Quality Control	Contractor TR 644	Contractor	Each lane/each wheel path	-----	-----	-----	-----	Contractor must furnish an approved 25 ft profilograph or approved alternate. Tested prior to as well as after grinding.
		Accept.	Contractor/ Dist. Lab TR 641	Proj. Engr.	Each lane/each wheel path	-----	-----	-----	2 days	Travel lane will be evaluated after corrective work completed by contractor.
		Accept.	Proj. Engr.	Proj. Engr.	*	-----	-----	-----	1 day	*For Cross Slope & Trans. Joints, PE shall test as needed. Contractor must furnish approved metal static straightedges.
	Surface Finish (Patching)	Quality Control	Contractor	Contractor	each patched area	-----	-----	-----	-----	Contractor must furnish an approved 10 ft metal static straightedge. To be tested as soon as concrete has hardened.
		Accept.	Proj. Engr.	Proj. Engr.	each patched area	-----	-----	-----	1day	Tested with approved 10 ft metal static straightedge.

SECTION 602 PORTLAND CEMENT CONCRETE PAVEMENT REHABILITATION (Cont.'d)

MATERIAL		PURP.	SAMPLED BY / METHOD	TESTED BY	MIN. FREQ.	MIN. QUANT. / CONTAINER	CERT. / DISTR.	SMALL QUANTITY	TYPICAL HANDLING TIME	REMARKS
	Tine Texturing (Patching)	Accept.	Proj. Engr. TR 229	Proj. Engr.	each patched area*	-----	-----	-----	1 day	*Match texture of adjoining pavement.
		Quality Control	Contractor TR 229	Contractor	*	-----	-----	-----	-----	*Sufficient number of random checks to ensure the required texture depth is achieved.
CONCRETE-PLASTIC	Compressive Strength	Accept.	Proj.Engr. S 301/ TR226	Proj. Engr.	6 cyl/lot	6 in. x 12 in. cylinder mold	-----	-----	30 days	-----
			Proj. Engr. S 301/ TR226	Proj. Engr.	3 cyl/lot	6 in. x 12 in. cylinder mold	-----	-----	1 day	*Used to determine early opening date for traffic or construction equipment.
CURING MATERIALS	Moist Cure Materials	Accept.	Proj. Engr. S 601	Proj. Engr.	1/shipment*	36 in. x 36 in.	-----	-----	10 days	*Visual inspection by Proj. Engr. Sample only if questionable. For cold weather protection.
CURING MATERIALS (Cont.'d)	Liquid Membrane Forming Compound	Prelim. Source Approval	Mfr. S 601	Proj. Engr.	1/6 months	1 qt friction top can	-----	-----	21 days	(AML)
		Accept.	Proj. Engr. S 601	Proj. Engr.	1/shipment*	1 qt friction top can	CC 1	-----	10 days	(AML) *Visual inspection by Proj. Engr. Sample only if questionable.
EPOXY RESIN SYSTEMS	Type I Grade as specified	Accept.	Proj. Engr. S 601	Proj. Engr.	1/lot or shipment	1 qt each component friction top can	CC 1	-----	11 days	(AML) Visual Inspection by Proj. Engr. Sample only if questionable.
		Verif.	Proj. Engr. S 601		1/lot or shipment	1 qt each component friction top can	-----	1 gallon	11 days	(AML)
JOINT SEALANT (Extruded)	Silicone Sealant (Single Component)	Prelim Source Approval	Proj. Engr. S 611	Proj. Engr.	1/batch or shipment	1 gal friction top can	CA 7	-----	30 days	(AML)
		Accept.	Proj. Engr. S 611	Proj. Engr.	1/shipment*	1 gal friction top can	CD 1 & 7	2000 yd^2 PCCP	30 days	(AML) *Sample only if questionable.
		Accept.*	Proj. Engr. S 611	Proj. Engr.	1/batch or shipment	1 gal friction top can	CA 7	2000 yd^2 PCCP	30 days	(AML) *When material is not accompanied by a CD.

SECTION 602 PORTLAND CEMENT CONCRETE PAVEMENT REHABILITATION (Cont.'d)

MATERIAL		PURP.	SAMPLED BY / METHOD	TESTED BY	MIN. FREQ.	MIN. QUANT. / CONTAINER	CERT. / DISTR.	SMALL QUANTITY	TYPICAL HANDLING TIME	REMARKS
JOINT SEALANT (Hot Poured)	Rubberized Asphaltic Type	Prelim. Source Approval	Proj. Engr. S 611	Proj. Engr.	1/batch or shipment	one container	CA 7	-----	11 days	(AML)
		Accept.	Proj. Engr. S 611	Proj. Engr.	1/shipment*	one container	CD 1 & 7	2000 yd^2 PCCP	11 days	(AML) *Sample only if questionable.
		Accept.*	Proj. Engr. S 611	Proj. Engr.	1/batch or shipment	one container	CA 7	2000 yd^2 PCCP	11 days	(AML) *When material is not accompanied by a CD.
JOINT SEALANT (Backing Material)	Rods	Accept.	-----	Proj. Engr.	-----	-----	-----	-----	-----	For use with polyurethane polymer (AML) and silicone polymer (AML) joint seals. Visual inspection by Proj. Engr.
	Rods (Heat Resistant)	Accept.	-----	Proj. Engr.	-----	-----	-----	-----	-----	(AML) For use with hot poured joint sealants. Visual inspection by Proj. Engr.
JOINT SEALANTS (Primer)		Accept.	-----	Proj. Engr.	-----	-----	-----	-----	-----	(AML) For use with silicone polymers joint sealants. Visual inspection by Proj. Engr.
LOW-SHRINK PATCHING MATERIAL	Rapid Set	Accept.	Proj. Engr. S 601	Proj. Engr.	1/source	1 bag	CC 1	-----	-----	(AML) For Dowel Bar retrofit 602.15(b).
	Compressive Strength	Accept.	Proj. Engr.	Proj. Engr.	1 per 1st day production	6 cubes	-----	-----	-----	Tested at 3 and 25 hours. 1st set must be taken during 1st day production
	Compressive Strength	Design	Proj Engr.	Proj. Engr.	1/source	6 cubes	-----	-----	-----	For preapproval of design. Tested at 3 and 24 hours.
	Compressive Strength	Verif.	Proj Engr.	Proj. Engr.	1 /4 hours of production	6 cubes	-----	-----	-----	Tested at 3 and 24 hours.
POWDERED AMMONIUM LIGNIN SULPHONAT		Accept.	Proj. Engr.	Proj. Engr.	1/lot or batch	-----	CC 1	-----	-----	For undersealing and slabjacking.
REINFORCEMENT	Adhesive Anchor Systems	Accept.	Proj. Engr. S 501	Proj. Engr.	1/type	-----	-----	-----	12 days	(AML)
	Dowel Bars	Accept.	Proj. Engr. S 501	Proj. Engr.	1/shipment	2 bars*	-----	-----	9 days	*For mechanical placement, only one dowel bar required. Basket assemblies checked for dimensional conformance by Proj. Engr.
	Tie Bars	Accept.	Proj. Engr. S 501	Proj. Engr.	1/size/grade/ 150,000 lb/ source*	2 bars	CA 1	-----	9 days	*If listed on AML, material with a CA (Distr. 1) need not be sampled. Sample if questionable.
	Steel Fibers	Accept.	-----	Proj. Engr.	1/shipment	1 qt can	CC* 1	-----	10 days	*Visual inspected by Proj. Engr. Sample if questionable.
SLURRY	Time of Efflux	Accept.	Proj. Engr. TR 633	Proj. Engr.	1/half day	3 gal suitable container	-----	-----	-----	For undersealing and slabjacking.

SECTION 702 MANHOLES, JUNCTION BOXES, CATCH BASINS & END TREATMENTS

MATERIAL		PURP.	SAMPLED BY / METHOD	TESTED BY	MIN. FREQ.	MIN. QUANT. / CONTAINER	CERT. / DISTR.	SMALL QUANTITY	TYPICAL HANDLING TIME	REMARKS
FOR DETAILS ON CONCRETE TEST, MIX DESIGNS AND MATERIALS (ADMIXTURES, AGGREGATES, CEMENT AND WATER) SEE SECTION 901 OF THIS MANUAL. (CLASS M)										
BACKFILL	Density	Accept.	-----	Proj. Engr.	1/location	**SEE SECTION 701 OF THIS MANUAL.**				
	Flowable Fill	**SEE SECTION 710 OF THIS MANUAL.**								
	Granular Material	Accept.	**SEE SECTION 701 OF THIS MANUAL.**	Proj. Engr.						
	Selected Soil	Accept.	**SEE SECTION 701 OF THIS MANUAL.**	Proj. Engr.						
BRICK	Sewer	Accept.	Proj. Engr. S 601	Proj. Engr.	1/25,000/ type*	5 bricks	-----	-----	10 days	*Visual inspection by Proj. Engr. Sample only if questionable.
COVERS, FRAMES & GRATES		Accept.	**When questioned by Proj. Engr.; one tension test bar, ASTM A 48, specimen B, (threaded), representing lot of material from which item is cast to be submitted to Const. Fab. Insp. See section 807 of this manual.**	Proj. Engr.			CA 1	-----	10 days	Visual inspection by Proj. Engr. Proj. Engr. to receive form 4148 and CA for physical and chemical properties, from the contractor.
JOINT FILLER		Accept.	-----	Proj. Engr.	-----	36 in.	-----	-----	10 days	Visual inspection by Proj. Engr. Sample only if questionable.
MORTAR	Cement, Sand & Water	Accept.	-----	Proj. Engr.	-----	-----	-----	-----	-----	Visual inspection by Proj. Engr. Sample only if questionable.

SECTION 702 MANHOLES, JUNCTION BOXES, CATCH BASINS & END TREATMENTS (Cont'd)

MATERIAL		PURP.	SAMPLED BY / METHOD	TESTED BY	MIN. FREQ.	MIN. QUANT. / CONTAINER	CERT. / DISTR.	SMALL QUANTITY	TYPICAL HANDLING TIME	REMARKS
METAL WORK COATINGS	Metal Work Paint	Accept.	Proj. Engr. S 601	Proj. Engr.	1/batch	1 qt friction top can	-----	-----	10 days	Visual inspection by Proj. Engr.
	Asphaltic Varnish	Accept.	Proj. Engr. S 601	Proj. Engr.	1/batch*	1 qt friction top can	-----	-----	10 days	*Visual inspection by Proj. Engr. Sample only if questionable.
PRECAST REINFORCED CONCRETE UNITS		Prelim. Source Approval	MFR S 301 S 601	MFR	1/300 joints/size or 4 cy/300 joints/size or 3 consecutive days production/ size*	1 joint or 4 cyl. 6 in. x 12 in. cylinder mold	-----	-----	-----	(AML) Three-edge-baring test or compressive strength test. Includes concrete pipe arch. *Shall not exceed 300 joints. The use of 6 in. x 12 in. compressive strength cylinders for Source Approval or verification shall be at the discretion of the Const. Fab. Insp. Unit. Each joint shall be stamped when approved.
		Verif.	Const. Fab. Insp. S 601	Const. Fab. Insp.	1/180 day/ production/ plant	1 joint or 4 cyl. 6 in. x 12 in. cylinder mold	-----	-----	-----	
		Accept.	**Inspected approved and stamped by MFR. prior to use.**	Proj. Engr.			CD 1	-----	-----	(AML) Visual inspection by Proj. Engr. CC to include lot number for Gasket Materials.
REINFORCEMENT	Bars	Accept.	Proj. Engr. or Const. Fab. Insp. S 501	Proj. Engr.	1/size/grade/ 150,000 lb/ source*	48 in. length	CA 1	-----	10 days	*If listed on AML, materials with a CA (Distr. 1) need not be sampled. Sample for Verification if questionable.
	Chairs	Accept.	Proj. Engr. S 501	Proj. Engr.	1/type*	1 chair	-----	-----	9 days	*Visual inspection by Proj. Engr. Sample only if questionable. Chairs with plastic coated tips need not be sampled.
	Wire Fabric	Accept.	Proj. Engr.* S 501	Proj. Engr.	1/shipment	48 in. x 48 in.	-----	-----	11 days	*Sampled by Const. Fab. Insp. for precast items.
SACKS		Accept.	Proj. Engr. S 501	Proj. Engr.	1/type/ source*	1 sack	-----	-----	9 days	*Visual inspection by Proj. Engr. Sample only if questionable.
STONE		Accept.	**Visual inspection and/or gradation check (at source, Proj. Site, or both, at Engineer's option).***	Proj. Engr.			-----	-----	-----	(AML) *Materials Lab available for assistance prior to use.

SECTION 701 CULVERTS & STORM DRAINS

MATERIAL		PURP.	SAMPLED BY / METHOD	TESTED BY	MIN. FREQ.	MIN. QUANT. / CONTAINER	CERT. / DISTR.	SMALL QUANTITY	TYPICAL HANDLING TIME	REMARKS
BACKFILL	Density	Quality Control	Contractor TR 401	Contractor	As needed*	-----	-----	-----	-----	*To ensure density requirements are met for each lift of backfill. DOTD to do TR 415 or TR 418.
	Density, when required by specifications	Accept.	Proj. Engr. S 401	Proj. Engr.	1/200 LF Pipe/Location/ Side of Pipe/3' of Backfill*	-----	-----	-----	-----	*Test first lift at 1/3 the pipe height, and at least 1 test for each additional 3' of backfill thickness.
	Density (Non-paved Side Drains)	Accept.	Proj. Engr. S 401	Proj. Engr.	*	-----	-----	-----	-----	*Visual inspection & compaction to the density of the surrounding soil with the exception of plastic pipe.
	Granular Material*	Accept.	Proj. Engr. S 401	Proj. Engr.	1/1,000 yd^3	1 full sample sack	-----	-----	4 days	*pH and resistivity required for metal pipe. Plastic pipe requires granular material, or Type A backfill material.
	Flowable Fill	**SEE SECTION 710 OF THIS MANUAL.**		Mix Design						
	Moisture Content	Quality Control	Contractor TR 403	Contractor	As needed*	-----	-----	-----	-----	*To ensure moisture requirements are met at time of compaction. DOTD to do TR 415 or TR 418.
	Moisture Content	Accept.	Proj. Engr. S 403	Proj. Engr.	1/location*	-----	-----	-----	-----	*Test taken during or just prior to compaction.
	Plastic Soil Blanket	Accept.	Proj. Engr. S 401	Proj. Engr.	1/1,000 yd^3*	1 full sample sack	-----	300 yd^3	10 days	*Not required if tested & approved as required excavation or borrow pit material.
	Selected Soil*	Accept.	Proj. Engr. S 401	Proj. Engr.	1/1,000 yd^3	1 full sample sack	-----	-----	10 days	*pH and resistivity required for metal pipe. Plastic pipe requires granular material, or type A backfill material.
BEDDING MATERIAL		Accept.	**SEE SECTION 726 OF THIS**	Proj. Engr.						
CONCRETE PIPE AND PIPE ARCH	Non-Reinforced (Concrete Sewer Pipe)	Prelim Source Approval	Const. Fab. Insp. S 601	Mfr. & Const. Fab. Insp.	1/160 joints/size	1 joint	-----	-----	-----	Three-edge bearing test. Each joint shall be stamped when approved.
		Accept.	**Inspected and stamped by Const. Fab. Insp. prior to**	Proj. Engr.			CD 1 & 6	-----	-----	Visual inspection by Proj. Engr. CD to include lot number for gasket materials.
	Reinforced	Prelim Source Approval	MFR. S 301 S 601	Mfr.	1/300 joints/size or 4 cyl/300 joints/size or 3 consecutive days production/ size*	1 joint or 4 cyl 6 in. x 12 in. cylinder mold	CD 1	-----	-----	(AML) Three-edge-bearing test or compressive strength test. The placement of elliptical reinforcement must be approved by the Const. Fab. Insp. Unit. Includes concrete pipe arch. *Shall not exceed 30 joints. The use of 6 in. X 12 in. compressive strength cylinders for Source Approval or Verification shall be at the discretion of the Const. Fab. Ins. Unit. Each joint shall be stamped when approved.
		Accept.	**Inspected and stamped by Const. Fab. Insp. prior to**	Proj. Engr.			CD 1	-----	-----	(AML) Visual insp. by Proj. Engr. CD to include lot number for Gasket Materials.

SECTION 701 CULVERTS & STORM DRAINS (Cont'd)

MATERIAL		PURP.	SAMPLED BY / METHOD	TESTED BY	MIN. FREQ.	MIN. QUANT. / CONTAINER	CERT. / DISTR.	SMALL QUANTITY	TYPICAL HANDLING TIME	REMARKS
CONCRETE PIPE AND PIPE ARCH (Cont'd)	Absorption Test	Verif.	Const. Fab. Insp. S 601	Const. Fab. Insp.	*	-----	-----	-----	-----	*This test will be conducted at the discretion of the Const. Fab. Insp. Unit in cases where the pipe exhibits visual porosity.
	Admixtures	Verif.	Const. Fab. Insp. S 601	Proj. Engr.	*	1 pt friction top can	-----	-----	14 days	(AML) *Visual inspection by Const. Fab. Insp. Unit. Sample only if questionable.
	Cement for Concrete Pipe	Verif.*	Const. Fab. Insp. S 102	Proj. Engr.	**	1 gal friction top can**	CD 6 & 7	-----	16 days	(AML) *See Section 901 of this manual. **Visual inspection by Const. Fab. Insp. Unit. Sample only if questionable.
	Coarse & Fine Aggregate for Concrete Pipe	Verif.	Const. Fab. Insp. S 101	Proj. Engr.	*	1 full sample sack	-----	-----	-----	(AML) *Visual inspection by Const. Fab. Insp. Unit. sample only if questionable.
	Hydrostatic Test	**This test shall be used as a basis for source approval of new joint designs and repairs and for evaluation of new products such as gasket materials, etc.**		Const. Fab. Insp.			-----	-----	-----	-----
	Mix Design	Design/ Accept.	Mfr. ASTM C 76	Const. Fab. Insp.	1/plant/ source	-----	-----	-----	-----	-----
	Permeability Test	Verif.	Const. Fab. Insp.	Const. Fab. Insp.	*	1 joint	-----	-----	-----	One pipe per lot of sizes up to and including 48 in. in diameter. *This test will be conducted at the discretion of Const. Fab. Insp. Unit in cases where the pipe exhibits visual porosity.
	Water	Accept.	Const. Fab Insp.	Proj. Engr.	1/source	1 qt plastic bottle	-----	-----	11 days	Drinkable water need not be sampled.
Reinforcing Steel for Concrete Pipe		Verif.	Const. Fab. Insp.	Proj. Engr.	1/12 months/ source	36 in. x 36 in.	-----	-----	10 days	Sample shall include an area which will have the welded splice at approximately the midpoint.
		Accept	Const. Fab. Insp.	Proj. Engr.	1/shipment*	36 in. x 36 in.	-----	-----	10 days	*Visual Inspection by Construction Fab. Inspection unit. Sample only if questionable.
CONDUIT PLUG & COLLARS	Concrete (Class R)	Accept.	**SEE SECTION 901 OF THIS MANUAL.**	Proj. Engr.						
GASKET MATERIAL (For Pipe)	Flexible Plastic Gasket	Accept.	Proj. Engr.	Proj. Engr.	*	3 ft length	CC** 1	-----	11 days	(AML) *Visual inspection by the Proj. Engr. Sample only if questionable. **Gasket lot no. listed on pipe CC. Primer used according to gasket manufacturer's recommendation; sample not
	Rubber Gaskets	Accept.	Proj. Engr.	Proj. Engr.	*	1 gasket	CC** 1	-----	17 days	(AML) *Visual inspection by the Proj. Engr. Sample only if questionable. **Gasket lot no. listed on pipe CC. Lubricant used according to gasket manufacturer's recommendation; sample not required.

SECTION 701 CULVERTS & STORM DRAINS (Cont'd)

MATERIAL		PURP.	SAMPLED BY / METHOD	TESTED BY	MIN. FREQ.	MIN. QUANT. / CONTAINER	CERT. / DISTR.	SMALL QUANTITY	TYPICAL HANDLING TIME	REMARKS
GEOTEXTILE FABRIC		Accept.	Proj. Engr. S 601	Proj. Engr.	1/type/source/ shipment	3 lin ft/roll width of fabric*	CC 1	150 yd^2	11 days	(AML) *Sample a minimum 18 ft2. For pipe wrap visual inspection by Proj. Engr. Sample only if questionable.
METAL PIPE		Prelim. Source Approval	MFR	Proj. Engr.	1/size/gage/ 200 lin ft	1 -3 in. triangle	CA 6	-----	-----	Connecting bands for metal pipe shall be inspected, approved and the pipe lab no. painted on the band and in the pipe by MFR.
		Verif.	Const. Fab. Insp.	Proj. Engr.	1/180 day production per plant	-----	CA 6	-----	-----	-----
	Bituminous Coated Corrugated Steel Pipe & Pipe Arch	Accept.	**Inspected, approved and marked by MFR. prior to use.**	Proj. Engr.			CD 1 & 6	-----	10 days	Visual inspection by Proj. Engr. CD includes gage, diameter, coupling bands, gasket materials and hardware.
	Corrugated. Aluminum Pipe & Pipe Arch	Accept.	**Inspected, approved and marked by MFR. prior to use.**	Proj. Engr.			CD 1 & 6	-----	11 days	Visual inspection by Proj. Engr. CD includes gage, diameter, coupling bands, gasket materials and hardware.
	Structural Plate For Pipe & Pipe Arch	Accept.	**Inspected, approved and marked by MFR prior to use.**	Proj. Engr. Proj. Engr.			CD 1 & 6	-----	11 days	Visual inspection by Proj. Engr. CD includes gage, diameter, coupling bands, gasket materials and hardware.
	Bituminous Material for Metal Pipe	Prelim. Source Approval	MFR S 601	Proj. Engr.	*	1 qt friction top can	CC 6	-----	-----	*Visual inspection. Sample only if questionable.
	Galvanizing Repair Compound	Accept.	Const. Fab Insp. S 601	Proj. Engr.	1/type*	1 can	-----	-----	-----	(AML) *Visual inspection. Sample only if questionable.
	Hardware	Prelim. Source Approval	Const. Fab. Insp. S 601	Proj. Engr.	1/source/ shipment	1 of each item*	CA 6	-----	-----	Visual inspection. Sample only if questionable. Includes steel rod, lugs, bolts and nuts. *One of each type of hardware used is to be submitted.
	Hydrostatic Test	**This test shall be used as a basis for source approval of new joint designs and repairs and for evaluation of new products such as Gasket Materials, etc.**		Const. Fab. Insp.			-----	-----	-----	-----
	Steel Coils for Metal Pipe	Accept.	Const. Fab. Insp.	Const. Fab. Insp.	-----	-----	CA 6	-----	-----	Const. Fab. Insp. reviews CA.
MORTAR	Cement, Sand & Water	Accept.	-----	Proj. Engr.	-----	-----	-----	-----	-----	Visual inspection by Proj. Engr. Sample only if questionable.

SECTION 701 CULVERTS & STORM DRAINS (Cont'd)

MATERIAL		PURP.	SAMPLED BY / METHOD	TESTED BY	MIN. FREQ.	MIN. QUANT. / CONTAINER	CERT. / DISTR.	SMALL QUANTITY	TYPICAL HANDLING TIME	REMARKS
PLASTIC CULVERT PIPE		Prelim. Source Approval	MFR	MFR.	1/size/lot	-----	CA 6	-----	-----	(AML)
		Accept.	-----	Proj. Engr.	-----	-----	CC 1	-----	-----	(AML) Visual inspection by Proj. Engr. CC includes split coupling bands, straps and gasket material.
	Hydrostatic Test	**The test shall be used as a basis for source approval of new joint designs and repairs and for evaluation of new products such as Gasket Materials, etc.**		Const. Fab. Insp.			-----	-----	-----	-----
	Mandrel Test	Accept.	Contractor	Contractor	1/line of pipe	-----	-----	-----	-----	For 36 in. diameter or less. Proj. Engr. to observe and approve. For pipe larger than 36 inches in diameter deflection shall be determine by a method approved by the
PLASTIC YARD DRAIN PIPE & JOINTS		Accept.	Proj. Engr. S 601	Proj. Engr.	1/type/size/ shipment*	6 ft length	CA 4 & 7	-----	10 days	(AML) *For corrugated Polyethylene 4 pieces 5 ft. length.
FITTINGS FOR PLASTIC YARD DRAIN PIPE &		Accept.	Proj. Engr. S 601	Proj. Engr.	1/type/size/ shipment*	1 item	CC 4 & 7	-----	10 days	* Visual Inspection by Proj. Engr. Sample only if questionable.
CULVERT SAFETY ENDS	Pipe Runners & Hardware	Accept.	-----	Proj. Engr.	-----	-----	CA 1	-----	-----	Visual inspection by Proj. Engr.
	Epoxy Resin Systems	Accept.	Proj. Engr. S 601	Proj. Engr.	1/lot or shipment*	1 qt each component friction top can	CC 1	1 gal	11 days	(AML) *Visual inspection by Proj. Engr. Sample only if questionable.
		Verif.	Proj. Engr. S 601		1/lot or shipment	1 qt each component friction top can	-----	1 gal	11 days	(AML)
	Adhesive Anchor Systems	Accept.	Proj. Engr. S 601	Proj. Engr.	1/lot or shipment*	1 qt each component friction top can	-----	1 gal	11 days	(AML) *Visual inspection by Proj. Engr. Sample only if questionable.
DRY-BATCHED SACKED CONCRETE	Compressive Strength	Accept.	Proj. Engr. S 601 TR 226 TR 230	Proj. Engr.	1 set/1,000 sacks 3 cyl/set	1 sack 6 in. x 12 in. cylinder mold*	CC** 1	-----	-----	(AML) *Cylinders made from contents of sack mixed with water to produce a slump of 2 to 5 inches. **CC should show mix proportions.
GASKET MATERIALS	Flexible Plastic Gasket	Accept.	Proj. Engr.	Proj. Engr.	*	3 ft length	CC** 1	-----	-----	(AML) *Visual inspection by Proj. Engr. Sample only if questionable. **Gasket Lot no. listed on precast unit CC.
GEOTEXTILE FABRIC		Accept.	Proj. Engr. S 601	Proj. Engr.	1/type/ source/ shipment	3 lin ft/roll width of fabric*	CC 1	150 yd^2	10 days	(AML) *Sample a minimum of 18ft2.

SECTION 703 UNDERDRAIN SYSTEMS

MATERIAL		PURP.	SAMPLED BY / METHOD	TESTED BY	MIN. FREQ.	MIN. QUANT. / CONTAINER	CERT. / DISTR.	SMALL QUANTITY	TYPICAL HANDLING TIME	REMARKS
FOR ASPHALTIC CONCRETE BASE COURSE & SURFACING SEE SECTIONS 502 AND 510 OF THIS MANUAL.										
BACKFILL	Aggregate (Size 3)	Accept.	Proj. Engr. S 101	Proj. Engr.	1/1,000 yd^3	1 full sample sack	-----	-----	4 days	-----
	Granular Material	Accept.	Proj. Engr. S 101	Proj. Engr.	1/1,000 yd^3	1 full sample sack	-----	-----	4 days	-----
GEOCOMPOSITE WALL DRAINS		Accept.	Proj. Engr. S 601	Proj. Engr.	1/type/lot*	4 ft^2	CA 7	-----	11 days	(AML) *Sample fittings 1 per type per shipment.
GEOTEXTILE FABRIC		Accept.	Proj. Engr. S 614	Proj. Engr.	1/type/ source/ shipment	3 lin ft/roll width of fabric*	CC 1	150 yd^2	10 days	(AML) *Sample a minimum if 18 ft2.
HARDWARE CLOTH	Rodent Screen	Accept.	Proj. Engr. S 601	Proj. Engr.	1/shipment*	1 screen	-----	-----	10 days	*Visual inspection by Proj. Engr. Sample only if questionable.
METAL PIPE	Perforated Bituminous Coated Corrug. Steel	Accept.	**See Section 701 of this manual for Const. Fab. Insp. sampling.**	Proj. Engr.			CD 1 & 6	-----	-----	Visual inspection by Proj. Engr. CD includes gage, diameter, coupling bands, gasket material and hardware.
	Perforated Corrugated Aluminum	Accept.	**See Section 701 of this manual for Const. Fab. Insp. sampling.**	Proj. Engr.			CD 1 & 6	-----	-----	Visual inspection by Proj. Engr. CD includes gage, diameter, coupling bands, gasket material and hardware.
PLASTIC PIPE		Accept.	Proj. Engr. S 601	Proj. Engr.	1/type/size/ shipment	6 ft. length*	CA 4 & 7	less than 1,000 ft	10 days	*For corrugated Polyethylene 4 pieces 5 ft. length.
PLASTIC PIPE FITTINGS		Accept.	Proj. Engr. S 601	Proj. Engr.	3/type/size/ shipment	-----	CC 4 & 7	less than 1,000 ft	10 days	Visual inspection by Proj Engr. Sample only if questionable.
PORTLAND CEMENT CONCRETE	Headwalls (Class M)	Accept.	**SEE SECTION 901 OF THIS MANUAL.**	Proj. Engr.				10 yd^3	-----	-----
PRECAST CONCRETE HEADWALLS		Accept.	**Inspected, stamped and approved by MFR prior to use. See Section 805 of this Manual.**	Proj. Engr.			CD 1 & 6	-----	-----	Visual inspection by Proj Engr. If questionable, contact Const. Fab. Insp. Unit prior to use.

SECTION 703 UNDERDRAIN SYSTEMS (Cond't)

MATERIAL		PURP.	SAMPLED BY / METHOD	TESTED BY	MIN. FREQ.	MIN. QUANT. / CONTAINER	CERT. / DISTR.	SMALL QUANTITY	TYPICAL HANDLING TIME	REMARKS
REINFORCING STEEL	Bars	Accept.	Proj. Engr. S 501	Proj. Engr.	1/source*	48 in. length	CA 1	-----	10 days	*If listed on AML material with CA (Distr. 1) need not be sampled. Sample for verification if questionable.
Wire Fabric		Accept.	Proj. Engr. S 501	Proj. Engr.	1/shipment*	48 in. X 48 in.	-----	-----	11 days	*Visual inspection by Proj. Engr. Sample only if questionable.

SECTION 704 GUARD RAIL

MATERIAL		PURP.	SAMPLED BY / METHOD	TESTED BY	MIN. FREQ.	MIN. QUANT. / CONTAINER	CERT. / DISTR.	SMALL QUANTITY	TYPICAL HANDLING TIME	REMARKS
CONCRETE (Class M)	Mix Designs, Materials & Tests	**SEE SECTION 901 OF THIS MANUAL.**								Sample only if questionable.
GALVANIZING REPAIR COMPOUND		Accept.	Proj. Engr. S 601	Proj. Engr.	1/type*	1 can	-----	-----	-----	(AML) *Visual inspection by Proj. Engr. Sample only if questionable.
HARDWARE	Accessories, Bolts, End Anchor Rods, Fittings, Nuts and Washers	Accept.	Proj. Engr. S 501	Proj. Engr.	1/size/type/ shipment*	1 of each item	CC 1	-----	12 days	*Visual inspection sample only if not listed on CC or if questionable.
METAL BEAM RAIL		Accept.	-----	Proj. Engr.	-----	-----	CC 3	-----	-----	(AML) Visual inspection by Proj. Engr. Rail shall be stamped with the name or brand of manufacturer, ID symbol or code for heat, no. and coating of lot, AASHTO spec. no., and class and type.
POSTS AND SPACER BLOCKS	Steel	Accept.	-----	Proj. Engr.	-----	-----	CC 1 & 6	-----	-----	Visual inspection by Proj. Engr.
	Timber	Accept.	-----	Proj. Engr.	-----	-----	CC 1 & 6	-----	-----	Visual inspection by Proj. Engr.
REINFORCEMENT	Wire Fabric	Accept.	Proj. Engr. S 501	Proj. Engr.	1/shipment*	48 in x 48 in.	-----	-----	11 days	*Visual inspection by Proj. Engr. Sample only if questionable.
WIRE ROPE & FITTINGS		Accept.	-----	Proj. Engr.	-----	-----	CC* 3	-----	-----	*Wire rope only. Proj. Engr. visually inspects fittings.
WELDING	**SEE SECTION 815 OF THIS MANUAL.**									

SECTION 705 FENCES

MATERIAL		PURP.	SAMPLED BY / METHOD	TESTED BY	MIN. FREQ.	MIN. QUANT. / CONTAINER	CERT. / DISTR.	SMALL QUANTITY	TYPICAL HANDLING TIME	REMARKS
CHAIN LINK FENCE, GATES AND APPURTENANCES	Fabric (Wire)	Accept.	Proj. Engr. S 501	Standard Plans	1/lot or shipment	36 in. length	-----	1,000 lin ft of fence	11 days	Visual inspection by Proj. Engr. Sample only if questionable
	Fittings and Misc. Hardware	Accept.	Proj. Engr. S 501	Standard Plans	1/type/size*	1 of each item**	-----	-----	11 days	*Visual inspection by Proj. Engr. Sample only if questionable. **One piece of each type of fitting or hardware used is to be submitted.
	Gate Frames, Posts, Rails	Accept.	Proj. Engr. S 501	Standard Plans	1/type/lot or shipment	1 post or 7 ft section	-----	1,000 lin ft of fence	11 days	Visual inspection by Proj. Engr. Sample only if questionable
	Hog Rings, Tension Wire, Wire Fabric	Accept.	Proj. Engr. S 501	Standard Plans	1/type/lot or shipment	48 in. length or 3 pieces*	-----	1,000 lin ft of fence	11 days	*Wire ties, wire fabric ties and hog rings require only 3 precut pieces for samples.
CONCRETE (Class R)	Mix Designs, Materials & Tests	**SEE SECTION 901 OF THIS MANUAL.**						10 yd^3	-----	-----
FIELD & LINE TYPE FENCE	Barbed Wire	Accept.	Proj. Engr. S 501	Standard Plans	1/lot or shipment*	30 ft length	CC or MFR Label	1,000 lin ft of fence	10 days	*Visual inspection by Proj. Engr. Sample only if questionable.
	Gates	Accept.	-----	Standard Plans Proj. Engr.	-----	-----	CC 1	-----	-----	Visual inspection and dimensional check by Proj. Engr.
	Gate Hardware	Accept.	Proj. Engr. S 501	Standard Plans	1/type*	1 of each item	-----	1,000 lin ft of fence	10 days	*Visual inspection by Proj. Engr. Sample only if questionable.
	Metal Fasteners	Accept.	Proj. Engr. S 501	Standard Plans	1/type/ shipment*	12 fasteners	-----	1,000 lin ft of fence	10 days	*Visual inspection by Proj. Engr. Sample only if questionable.
	Staples & Nails	Accept.	Proj. Engr. S 501	Standard Plans	1/size/ shipment*	12 staples	-----	1,000 lin ft of fence	10 days	*Visual inspection by Proj. Engr. Sample only if questionable.
	Steel Braces	Accept.	Proj. Engr. S 501	Standard Plans	1/type/lot or shipment*	1 brace	-----	1,000 lin ft of fence	10 days	*Visual inspection by Proj. Engr. Sample only if questionable.
	Steel Gate Posts	Accept.	Proj. Engr. S 501	Standard Plans	1/type/lot or shipment*	1 post	-----	1,000 lin ft of fence	10 days	*Visual inspection by Proj. Engr. Sample only if questionable.
	Steel Gate Stops	Accept.	Proj. Engr. S 501	Standard Plans	1/type/lot or shipment*	1 stop	-----	1,000 lin ft of fence	10 days	*Visual inspection by Proj. Engr. Sample only if questionable.
	Steel Posts with Anchor Plates	Accept.	Proj. Engr. S 501	Standard Plans	1/type/llot or shipment*	1 post with plate	CC or MFR Label 1	1,000 lin ft of fence	10 days	*Visual inspection by Proj. Engr. Sample only if questionable.
	Timber Posts	Accept.	-----	Proj. Engr.	-----	-----	CC 1	-----	-----	Visual inspection by Proj. Engr.
	Woven Wire	Accept.	Proj. Engr. S 501	Proj. Engr.	1/lot or shipment*	36 in. length	CC or MFR Label 1	1,000 lin ft of fence	10 days	*Visual inspection by Proj. Engr. Sample only if questionable.

SECTION 705 FENCES (Cont'd)

MATERIAL		PURP.	SAMPLED BY / METHOD	TESTED BY	MIN. FREQ.	MIN. QUANT. / CONTAINER	CERT. / DISTR.	SMALL QUANTITY	TYPICAL HANDLING TIME	REMARKS
FIELD & LINE TYPE FENCE (Cont'd)	Timber Gate Posts, Timber Gate Stops, Timber Stop Posts	Accept.	-----	Proj. Engr.	-----	-----	CC 1	-----	-----	Visual inspection by Proj. Engr.
GALVANIZING REPAIR COMPOUND		Accept.	-----	Proj. Engr.	-----	-----	-----	-----	-----	(AML) Visual inspection by Proj. Engr. See Subsection 1008.05 of the Standard Specifications.
GROUND ROD ASSEMBLY	Ground Rod, Wire & Clamp	Accept.	Proj. Engr. S 501	Mat. Lab	1/item*	1 of each item Wire 18 in. length	-----	-----	9 days	*Visual inspection by Proj. Engr. (Note: Coated steel hardware is not permitted.) Sample only if questionable.

I-70 2/07

SECTION 706 CONCRETE WALKS, DRIVES AND INCIDENTAL PAVING

MATERIAL		PURP.	SAMPLED BY / METHOD	TESTED BY	MIN. FREQ.	MIN. QUANT. / CONTAINER	CERT. / DISTR.	SMALL QUANTITY	TYPICAL HANDLING TIME	REMARKS
CONCRETE (Class M)	Mix Designs, Materials & Tests	**SEE SECTION 901 OF THIS MANUAL.**								Air entrainment is required for slip forming.
CURING MATERIALS		Accept.	**SEE SECTION 601 OF THIS MANUAL.**	Proj. Engr.						
JOINT FILLER	Preformed Bituminous Type	Accept.	-----	Proj. Engr.	-----	36 in. length	-----	-----	10 days	Visual inspection by Proj. Engr. Sample if questionable
REINFORCING STEEL		Accept.	**SEE SECTION 601 OF THIS MANUAL.**	Proj. Engr.						
DETECTABLE WARNING SURFACE FOR HANDICAP RAMPS (Truncated Domes)		Accept.	-----	Proj. Engr.	-----	-----	CC 3	-----	-----	Visual Inspection by Proj. Engr. Sample if questionable

I-71 2/07

SECTION 707 CURBS AND GUTTERS

MATERIAL		PURP.	SAMPLED BY / METHOD	TESTED BY	MIN. FREQ.	MIN. QUANT. / CONTAINER	CERT. / DISTR.	SMALL QUANTITY	TYPICAL HANDLING TIME	REMARKS
ASPHALTIC CURB				**For details on Additives, Aggregates, Asphalt Cement, Asphaltic Concrete, Asphaltic Tack Coat, Asphalt Mix Release Agent and Mineral Filler, See Section 502 of this Manual.**				-----	-----	No requirement for density and surface tolerance.
BACKFILL	Usable Soil	Accept.	-----	Proj. Engr.	-----	-----	-----	-----	-----	Visual inspection by Proj. Engr.
CONCRETE (Class M)	Mix Designs, Materials & Tests	**SEE SECTION 901 OF THIS MANUAL.**								Air entrainment is required for slip forming.
CURING MATERIALS		Accept.	**SEE SECTION 601 OF THIS MANUAL.**	Proj. Engr.						
FORM RELEASE AGENT		Accept.	Proj. Engr. S 601	Proj. Engr.	1/lot	1 qt plastic bottle	-----	-----	9 days	(AML) Visual inspection by Proj. Engr. Sample only if questionable.
JOINT MATERIALS (Sealants, Filler, & Seals)		Accept.	Proj. Engr. S 601	Proj. Engr.	1/5,000 lin ft*	35 in. length or 1 gal	-----	-----	17 days	*Visual inspection by Proj. Engr. Sample only if questionable.
REINFORCEMENT	Tie Bars	Accept.	Proj. Engr. S 501	Proj. Engr.	1/size/ source*	1 bar	-----	-----	10 days	(AML) *Visual inspection Proj. Engr. Sample only if questionable.

SECTION 708 RIGHT-OF-WAY MONUMENTS

MATERIAL		PURP.	SAMPLED BY / METHOD	TESTED BY	MIN. FREQ.	MIN. QUANT. / CONTAINER	CERT. / DISTR.	SMALL QUANTITY	TYPICAL HANDLING TIME	REMARKS
RIGHT-OF-WAY MONUMENTS	Monuments, Steel Stakes & Witness Posts	Accept.	**Type as shown on plans or approved by the Location & Survey**	Const. Fab. Insp.			-----	-----	-----	Approval letter from Location & Survey Section Administrator required for substitutions. Visual inspection by Proj. Engr.

SECTION 709 STEEL CATTLE GUARDS

MATERIAL		PURP.	SAMPLED BY / METHOD	TESTED BY	MIN. FREQ.	MIN. QUANT. / CONTAINER	CERT. / DISTR.	SMALL QUANTITY	TYPICAL HANDLING TIME	REMARKS
BACKFILL	Density	Accept.	Proj. Engr.	Proj. Engr.	1/location	-----	-----	-----	-----	Six (6) inch layer to density of surrounding soil in the roadway see section 203.07.
CONCRETE (Class M)	Mix Designs, Materials & Tests	**SEE SECTION 901 OF THIS MANUAL.**								
HARDWARE	Bolts, Nuts and Washers	Accept.	Proj. Engr. S 501	Proj. Engr.	1/size/type/ shipment*	1 of each item**	-----	-----	12 days	*Visual inspection by Proj. Engr. Sample only if questionable. **One piece of each size and type of hardware used is be submitted.
PAINT PROTECTIVE COATINGS		Accept.	**SEE SECTION 811 OF THIS MANUAL.**							
REINFORCING STEEL	Bars	Accept.	Proj. Engr. S 501	Proj. Engr.	1/size/ source*	48 in. length	-----	-----	10 days	(AML) *Visual inspection by Proj. Engr. Sample only if questionable.
STEEL CATTLE GUARD	Rails & Pipe Wings	Accept.	**Inspected by Const. Fab. Insp. Prior to use. See Section 807 of this Manual**	Std. Pl. KG-01 Const. Fab. Insp.			-----	-----	-----	Proj. Engr. to receive inspection report form Const. Fab. Insp.
TREATED TIMBER		Accept.	-----	Const. Fab. Insp.	-----	-----	CC 1 & 6	-----	-----	Visual inspection at project site by Proj. Engr.

I-75 2/07

SECTION 710 FLOWABLE FILL

MATERIAL		PURP.	SAMPLED BY / METHOD	TESTED BY	MIN. FREQ.	MIN. QUANT. / CONTAINER	CERT. / DISTR.	SMALL QUANTITY	TYPICAL HANDLING TIME	REMARKS
PORTLAND CEMENT		Prelim. Source Approval	**SEE SECTION 901 OF THIS MANUAL.**	Proj. Engr.						
FLOWABLE FILL	Mix Design	Design	*	Contractor/ Proj. Engr.	1/mix design	-----	-----	-----	3 days	*Lab Engineer to approve before work begins. Trial batch required.
FLY ASH		Prelim. Source Approval	**SEE SECTION 901 OF THIS MANUAL.**	Proj. Engr.						
MIX DESIGN		Design	Contractor/ Supplier		1/mix design	-----	-----	-----	28 days	Approved trial batch mix design-contractor to submit to Engr. For approval.
SAND		Prelim. Source Approval	**SEE SECTION 901 OF THIS MANUAL.**	Proj. Engr.						
WATER		Prelim. Source Approval	Proj. Engr. S 303		1/source*	1 qt plastic bottle	-----	-----	11 days	*Drinkable water need not be sampled.

I-76 2/07

SECTION 711 RIPRAP

MATERIAL		PURP.	SAMPLED BY / METHOD	TESTED BY	MIN. FREQ.	MIN. QUANT. / CONTAINER	CERT. / DISTR.	SMALL QUANTITY	TYPICAL HANDLING TIME	REMARKS
GEOTEXTILE FABRIC		Accept.	Proj. Engr. S 601	Proj. Engr.	1/type/ source/ shipment	3 lin ft/roll width of fabric*	CC 1	150 yd^2	10 days	(AML) *Sample a minimum of 18 ft2.
RECYCLED CONCRETE		Accept.	**Visual inspection and/or gradation check (at source, project site, or both, at Engineer's option.)**	Proj. Engr.			-----	-----	-----	Gradation and unit weight provided suppliers. Must be from an approved source.
STONE		Accept.		Proj. Engr.			-----	-----	-----	(AML)

SECTION 712 REVETMENTS

MATERIAL		PURP.	SAMPLED BY / METHOD	TESTED BY	MIN. FREQ.	MIN. QUANT. / CONTAINER	CERT. / DISTR.	SMALL QUANTITY	TYPICAL HANDLING TIME	REMARKS
BACKFILL	Usable Soil	Accept.	Proj. Engr. S 401	Proj. Engr.	1/1,000 yd^3	1 full sample sack	-----	-----	10 days	-----
CONCRETE (Class R)	Mix Designs, Materials & Test	**SEE SECTION 901 0F THIS MANUAL.**								
CURING MATERIALS		Accept.	-----	Proj. Engr.	-----	-----	-----	less than 300 yd^2	-----	See Section 601 of this manual.
DRY-BATCHED PREPACKAGE D SACKED CONCRETE	Compressive Strength	Accept.	Contractor Proj. Engr. S 601 TR 226 TR 230	Proj. Engr.	1 set of 3 cy/set/1,000 sacks*	1 sack 6 in. x 12 in. cylinder mold	CC 1	-----	-----	(AML) *Cylinders made from contents of sack mixed by contractor. Water to produce a slum of 2 to 5 inches. CC should show mix proportions.
GEOTEXTILE FABRIC		Accept.	Proj. Engr. S 601	Proj. Engr.	1/type/source/ shipment	3 lin ft/roll width of fabric*	CC 1	150 yd^2	10 days	(AML) *Sample a minimum of 18 ft2.
REFER TO SPECIFICATIONS FOR DETAILS ON NCHRP 350 REQUIREMENTS FOR PORTABLE WORK ZONE DEVICES										
JOINT FILLER		Accept.	Proj. Engr. S 601	Proj. Engr.	1/5,000 lin ft/ type*	36 in. length	-----	-----	11 days	*Visual inspection by Proj. Engr. Sample only if questionable.
RECYCLED CONCRETE & STONE		**SEE SECTION 713 OF THIS MANUAL.**								
SACKS		Accept.	Proj. Engr. S 601	Proj. Engr.	1/type/ source*	1 sack	-----	-----	9 days	*Visual inspection by Proj. Engr. Sample only if questionable.
USABLE SOIL		**SEE SECTION 203 OF THIS MANUAL.**								

SECTION 713 TEMPORARYTRAFFIC CONTROL

MATERIAL		PURP.	SAMPLED BY / METHOD	TESTED BY	MIN. FREQ.	MIN. QUANT. / CONTAINER	CERT. / DISTR.	SMALL QUANTITY	TYPICAL HANDLING TIME	REMARKS
ADVANCE WARNING ARROW PANEL		Accept.	-----	Proj. Engr.	-----	-----	CC 1	-----	-----	Visual inspection by Proj. Engr.
BARRICADE WARNING LIGHTS		Accept.	Proj. Engr. S 601	Proj. Engr.	1/type*	1 unit	CC** 1	-----	-----	(AML) *Visual inspection by Proj. Engr. Sample only if questionable. **See Specification Subsection 1018.12(c) for certification
DRUMS, CONES, TUBULAR MARKERS, AND FLEXIBLE DELINEATORS		Accept.	-----	Std. Pl. TC Series Proj. Engr.	-----	-----	CC 1	-----	-----	(AML for plastic drums) Visual inspection by Proj. Engr. Sample only if questionable.
	Sheeting	Accept.	Proj. Engr. S 601	Proj. Engr.	-----	-----	CC 1	-----	-----	(AML) Visual inspection by Proj.. Engr. Sample only if questionable.
GLASS BEADS FOR THERMOPLASTIC PAVEMENT MARKINGS AND TRAFFIC PAINT	Drop-on Application	Prelim. Source Approval	Proj. Engr.	Proj. Engr.	1/lot	1-50 lb bag	-----	-----	10 days	-----
		Accept.	Proj. Engr.	Proj. Engr.	1/lot	1-50 lb bag	CD* 1 & 7	-----	10 days	*CD issued when presampled by Dist. Lab and preapproved. Sample only if questionable.
PORTABLE FLASHER SUPPORTS		Accept.	-----	Std. Pl. TC Series Proj. Engr.	-----	-----	CC 1	-----	-----	Visual inspection by Proj. Engr.
RAISED PAVEMENT MARKERS & ADHESIVES		Accept.	**SEE SECTION 731 OF THIS MANUAL.**	Proj. Engr.						
TEMPORARY PAVEMENT MARKING TAPE	Temporary Striping Tape (Type I & II)	Accept.	Proj. Engr. S 601	Proj. Engr.	1/shipment*	6 ft length	CC 1	-----	10 days	(AML) *Visual inspection by Proj. Engr. Sample only if questionable.
TEMPORARY SIGNS, VERTICAL PANELS & BARRICADES	Barricades, Vertical Panels & Signs	Verif.	**When questioned by Proj. Engr., visual inspection by Const. Fab.**	MUTCD, Project Plans Const. Fab. Insp.			CA/CC 1	-----	-----	Visual inspection by Proj. Engr. Const. Fab. Insp. to receive CA/CC when requested. *Required documentation is detailed in 713.07

SECTION 713 TEMPORARY TRAFFIC CONTROL (Cont'd)

MATERIAL		PURP.	SAMPLED BY / METHOD	TESTED BY	MIN. FREQ.	MIN. QUANT. / CONTAINER	CERT. / DISTR.	SMALL QUANTITY	TYPICAL HANDLING TIME	REMARKS
TEMPORARY SIGNS, VERTICAL PANELS & BARRICADES (con't)	Reflective Sheeting, Paste, Paint, Overlay Fill	Verif.	**When questioned by Proj. Engr, sample from original lot of reflective sheeting, paste, paint and/or overlay film to be obtained by Const. Fab. Insp. for testing. Random sampling by Const. Fab. Insp. for Quality Assurance. See Section 729 of this Manual.**	Proj. Engr.			CA/CC 1	-----	-----	(AML) Visual inspection by Proj. Engr.
	Substrate	Verif.	**When questioned by Proj. Engr., sample from original substrate lot by the Const. Fab. Insp. for testing. Random sampling by Const. Fab. Insp. for Quality Assurance.**	Proj. Engr.			CA/CC** 1	-----	-----	Visual inspection by Proj. Engr. *Required documentation is detailed in 713.07. **CA for aluminum, CC for wood, no certification for plastics.
THERMOPLASTIC PAVEMENT MARKINGS		Accept.	**SEE SECTION 732 OF THIS MANUAL.**	Proj. Engr.						
TRAFFIC PAINT		Accept.	**SEE SECTION 737 OF THIS MANUAL.**	Proj. Engr.						

I-80 2/0

SECTION 713 TEMPORARY TRAFFIC CONTROL (Cont'd)

MATERIAL		PURP.	SAMPLED BY / METHOD	TESTED BY	MIN. FREQ.	MIN. QUANT. / CONTAINER	CERT. / DISTR.	SMALL QUANTITY	TYPICAL HANDLING	REMARKS
BARRIERS	Precast Concrete	**SEE SECTION 733 OF THIS MANUAL.**		Const. Fab. Insp.						
	Water Filled	Accept.	-----	Std. Pl. TC Series Proj. Engr.	-----	-----	CC** 1	-----	-----	Visual inspection by Proj. Engr. *Required documentation is detailed in 713.07. **CA for aluminum, CC for wood, no certification for plastics.

I-81 2/07

SECTION 714 SODDING

MATERIAL		PURP.	SAMPLED BY / METHOD	TESTED BY	MIN. FREQ.	MIN. QUANT. / CONTAINER	CERT. / DISTR.	SMALL QUANTITY	TYPICAL HANDLING TIME	REMARKS
AGRICULTURAL LIME		Accept.	**SEE SECTION 718 OF THIS MANUAL.**	Proj. Engr.						
FERTILIZER		Accept.	**SEE SECTION 718 OF THIS MANUAL.**	Proj. Engr.						
SOD		Accept.	-----	Proj. Engr.	-----	-----	-----	-----	-----	*Visual inspection by Proj. Engr. or Roadside Development personnel.
WATER		Accept.	Proj. Engr. S 303	Proj. Engr.	1/source*	1 qt plastic bottle	-----	-----	11 days	*Visual inspection by Proj. Engr. Sample only if questionable.

I-82 2/07

SECTION 715 TOPSOIL

MATERIAL		PURP.	SAMPLED BY / METHOD	TESTED BY	MIN. FREQ.	MIN. QUANT. / CONTAINER	CERT. / DISTR.	SMALL QUANTITY	TYPICAL HANDLING TIME	REMARKS
AGRICULTURAL LIME		Accept.	**SEE SECTION 718 OF THIS MANUAL.**	Proj. Engr.						
TOPSOIL		Accept.	Contractor*		1/1,000 yd3	1 full sample sack	CA 3	200 yd3	-----	*Contractor to provide report from established soil testing entity.

SECTION 716 VEGETATIVE & FIBER MULCH

MATERIAL		PURP.	SAMPLED BY / METHOD	TESTED BY	MIN. FREQ.	MIN. QUANT. / CONTAINER	CERT. / DISTR.	SMALL QUANTITY	TYPICAL HANDLING TIME	REMARKS
TACKING AGENTS	Emulsified Asphalt	Prelim Source Approval	**SEE SECTION 506 OF THIS MANUAL.**	Proj. Engr.						
		Accept.	-----	Proj. Engr.	1/shipment	-----	CD* 1 & 7	No CD required if less than 500 gal	4 days	(AML) Visual inspection by Proj. Engr. *Sample when not accompanied by CD or questionable.
	Tacking Agent	Accept.	-----	Proj. Engr.	-----	-----	CA* 1 & 7	-----	-----	Visual inspection. *Must be an approved product for AML items.
VEGETATIVE MULCH		Accept.	-----		-----	-----	-----	-----	-----	Visual inspection by Proj. Engr. or Roadside Development personnel.
FIBER MULCH		Accept.	-----		-----	-----	-----	-----	-----	(AML) Visual inspection by Proj. Engr. or Roadside Development

SECTION 717 SEEDING

MATERIAL		PURP.	SAMPLED BY / METHOD	TESTED BY	MIN. FREQ.	MIN. QUANT. / CONTAINER	CERT. / DISTR.	SMALL QUANTITY	TYPICAL HANDLING TIME	REMARKS
AGRICULTURAL LIME		Accept.	**SEE SECTION 718 OF THIS MANUAL.**	Proj. Engr.						
FERTILIZER		Accept.	**SEE SECTION 718 OF THIS MANUAL.**	Proj. Engr.						
SEED		Accept.	-----	Proj. Engr.	-----	-----	-----	50 lb	-----	Analysis tag plus test report for LA Department of Agriculture. Seed test reports from other states are acceptable provided specification requirements are met. Consult Roadside Development personnel for seed
TOPSOIL		Accept.	Contractor		1/1,000 yd3	1 full sample sack	CA 3	200 yd3	-----	Contractor to provide report from established soil testing entity.
WATER		Accept.	Proj. Engr. S 303	Proj. Engr.	1/source*	1 qt plastic bottle	-----	-----	11 days	*Visual inspection by Proj. Engr. Sample only if questionable.

SECTION 718 FERTILIZER AND AGRICULTURAL LIME

MATERIAL		PURP.	SAMPLED BY / METHOD	TESTED BY	MIN. FREQ.	MIN. QUANT. / CONTAINER	CERT. / DISTR.	SMALL QUANTITY	TYPICAL HANDLING TIME	REMARKS
AGRICULTURAL LIME		Accept.	-----	Proj. Engr.	-----	-----	CA 1	10 tons	-----	Visual inspection. Sample only if questionable.
FERTILIZER		Accept.	-----	Proj. Engr.	-----	-----	CA* 1	-----	-----	For bag shipments, visual inspection of bag markings by Proj. Engr. *For bulk shipments, Proj. Engr. to receive CA.

SECTION 719 LANDSCAPING

MATERIAL		PURP.	SAMPLED BY / METHOD	TESTED BY	MIN. FREQ.	MIN. QUANT. / CONTAINER	CERT. / DISTR.	SMALL QUANTITY	TYPICAL HANDLING TIME	REMARKS
AGRICULTURAL LIME		Accept.	**SEE SECTION 718 OF THIS MANUAL.**	Proj. Engr.						
BACKFILL SOIL	Mortar Sand, Pine Bark, Water Management Gel, Manure, Mycorrhizal Inoculant & Topsoil	Accept.	-----	Proj. Engr.	-----	-----	-----	-----	-----	Visual inspection by Proj. Engr. of all ingredients prior to mixing.
FERTILIZER		Accept.	**SEE SECTION 718 OF THIS MANUAL.**	Proj. Engr.						
MULCHING	Other Materials	Accept.	Proj. Engr. S 601	Proj. Engr.	1/source*	3 full sample sacks	-----	-----	-----	*Visual inspection by Porj. Engr. Sample only if questionable.
	Pine Bark	Accept.	Proj. Engr. S 601	Proj. Engr.	1/source*	3 full sample sacks	-----	-----	-----	*Visual inspection by Porj. Engr. Sample only if questionable.
PLANTS	Containered	-----	**Documented visual determination of specification compliance by DOTD Landscape Architect at nursery source. All plants shall be legibly tagged. Acceptance is based on inspection at the end of one full growing season.**	Landscape Architect						
	Native Stock	-----		Landscape Architect						
SOIL	Planting Area	Accept.	Contractor*		1/planting area	1 full sample sack	CA 3	-----	-----	*Contractor to provide report from established soil testing entity.
TOPSOIL		Accept.	Contractor*		1000 yd 3	1 full sample sack	CA 3	200 yd2	-----	*Contractor to provide report from established soil testing entity.

SECTION 719 LANDSCAPING

WATER		Accept.	Proj. Engr. S 303	Proj. Engr.	1/source*	1 qt plastic bottle	-----	-----	11 days	*Visual inspection by Proj. Engr. Sample only if questionable.

SECTION 720 EROSION CONTROL SYSTEMS

MATERIAL		PURP.	SAMPLED BY / METHOD	TESTED BY	MIN. FREQ.	MIN. QUANT. / CONTAINER	CERT. / DISTR.	SMALL QUANTITY	TYPICAL HANDLING TIME	REMARKS
EROSION CONTROL SYSTEMS	Rolled Products	Prelim. Source Approval	Proj. Engr. S 613	Proj. Engr.	1/200 rolls/ Mfr.'s Lot	3 yd^2*	-----	-----	10 days	(AML) *When sampling moisture sensitive material use moisture proof bag.
		Accept.	Proj. Engr. S 613	Proj. Engr.	1/200 rolls/ Mfr.'s Lot	3 yd^2*	CD** 1 & 7	-----	10 days	(AML) *When sampling moisture sensitive material use moisture proof bag. **Sample when not accompanied by a CD or questionable.
	Bagged Products	Prelim. Source Approval	Proj. Engr. S 613	Proj. Engr.	1/200 bags/ Mfr.'s Lot	1 bag	-----	-----	10 days	(AML)
		Accept.	Proj. Engr. S 613	Proj. Engr.	1/200 bags/ Mfr.'s Lot	1 bag	CD* 1 & 7	-----	10 days	(AML) *Sample when not accompanied by a CD or questionable.
	Hardware	Accept.	Proj. Engr. S 601	Proj. Engr.	1/item/type/ size	1 item	-----	-----	10 days	(AML) Visual inspection by Proj. Engr. Sample only if questionable.
	Additives	Accept.	Proj. Engr. S 601	Proj. Engr.	1 quart/mfr's lot	1 item or 1 quart	CD* 1 & 7	-----	10 days	(AML) *Sample when not accompanied by a CD or questionable.

I-87 2/07

SECTION 721 MOWING, TRIMMING & DEBRIS COLLECTION

MATERIAL		PURP.	SAMPLED BY / METHOD	TESTED BY	MIN. FREQ.	MIN. QUANT. / CONTAINER	CERT. / DISTR.	SMALL QUANTITY	TYPICAL HANDLING TIME	REMARKS
HERBICIDES		Accept.	Dist. Roadside Development Coordinator	Proj. Engr.	-----	-----	-----	-----	-----	Approval of the District's Roadside Development Coordinator for use, type & rate of application.

I-88 2/07

SECTION 723 GRANULAR MATERIAL

MATERIAL		PURP.	SAMPLED BY / METHOD	TESTED BY	MIN. FREQ.	MIN. QUANT. / CONTAINER	CERT. / DISTR.	SMALL QUANTITY	TYPICAL HANDLING TIME	REMARKS
GRANULAR MATERIAL		Design/ Accept.	Proj. Engr. S 101	Proj. Engr.	1/1,000 yd^3	1 full sample sack	-----	50 yd^3	4 days	-----
MATERIAL ON ROADWAY	Density	Accept.	Proj. Engr. TR 401	Proj. Engr.	1/1,000 lin ft/ 2-lane rdwy or 1/2,000 lin ft/	-----	-----	-----	1/2 hr.	-----
	Thickness & Width	Accept.	Proj. Engr. TR 602	Proj. Engr.	1/1,000 lin ft/ 2-lane rdwy or 1/2,000 lin ft/	-----	-----	300 lin ft per location	3 days	*See DOTD TR 602. For small quantity, Proj. Engr. documents in field book.

I-89 2/07

SECTION 725 TEMPORARY DETOUR ROADS AND BRIDGES

I-90 2/07

MATERIAL		PURP.	SAMPLED BY / METHOD	TESTED BY	MIN. FREQ.	MIN. QUANT. / CONTAINER	CERT. / DISTR.	SMALL QUANTITY	TYPICAL HANDLING TIME	REMARKS
For details on Temporary Signs, Barricades and Pavement Markings, see Section 713 of this Manual. For details on Gard Rail, see Section 704 of this Manual. For details on Median Roadway Barriers, see Section 733 of this Manual. For details on Seed, see Section 717 of this Manual. For details on Fertilizer, see section 718 of this Manual. For details on Embankments, see section 203 of this Manual.										
BASE COURSE (Roadway)				**SEE PART III OF THIS MANUAL.**						
PILES & TIMBER		Accept.	-----	Proj. Engr.	-----	-----	-----	-----	-----	Visual inspection by Proj. Engr.
SURFACE COURSE (Roadway)		**SEE PARTS IV, V OR VI OF THIS MANUAL.**								
TEMPORARY CULVERT PIPE		Accept.	-----	Proj. Engr.	-----	-----	-----	-----	-----	Visual inspection by Proj. Engr.

SECTION 726 BEDDING MATERIAL

I-91 2/07

MATERIAL		PURP.	SAMPLED BY / METHOD	TESTED BY	MIN. FREQ.	MIN. QUANT. / CONTAINER	CERT. / DISTR.	SMALL QUANTITY	TYPICAL HANDLING TIME	REMARKS
AGGREGATES	Bedding Material	Accept.	Proj. Engr. S 101	Proj. Engr.	1/1,000 yd^3 stockpile*	1 full sample sack	-----	50 yd^3	4 days	(AML for stone, expanded clay, gravel and slag) *Each ingredient may be sampled and approved prior to mixing. Recycled PCC must be from an approved source.
GEOTEXTILE FABRIC		Accept.	Proj. Engr. S 601	Proj. Engr.	1/type/source/ shipment	3 lin ft/roll width of fabric*	-----	150 yd^2	10 days	(AML) *Sample a minimum of 18 ft2.
PLASTIC SOIL BLANKET		Accept.	Proj. Engr. S 401	Proj. Engr.	1/1,000 yd^3*	1 full sample sack/sample	-----	300 yd^3	10 days	*Not required if tested and approved as required excavation or borrow material.

SECTION 728 JACKED OR BORED PIPE

I-92 2/07

MATERIAL		PURP.	SAMPLED BY / METHOD	TESTED BY	MIN. FREQ.	MIN. QUANT. / CONTAINER	CERT. / DISTR.	SMALL QUANTITY	TYPICAL HANDLING TIME	REMARKS
GROUT		Accept.	**SEE SECTION 901 OF THIS MANUAL.**	Proj. Engr.						
PIPE & JOINTS		Accept.	**SEE SECTION 701 OF THIS MANUAL.**	Proj. Engr.						

SECTION 729 TRAFFIC SIGNS AND DEVICES

MATERIAL		PURP.	SAMPLED BY / METHOD	TESTED BY	MIN. FREQ.	MIN. QUANT. / CONTAINER	CERT. / DISTR.	SMALL QUANTITY	TYPICAL HANDLING TIME	REMARKS
BACKFILL (Soil)		Accept.	-----	Proj. Engr.	-----	-----	-----	-----	-----	Visual inspection by Proj. Engr.
CONCRETE	Mix Designs, Materials & Tests	**SEE SECTION 901 OF THIS MANUAL.**								
DELINEATORS		Accept.	Proj. Engr. S 601	Proj. Engr.	1/type/ shipment	2 pieces	CC 1	-----	10 days	*Required documentation is detailed in 713.07.
GALVANIZING REPAIR COMPOUND	Ferrous Metal	**SEE SECTION 811 OF THIS MANUAL.**		Proj. Engr.						(AML)
GROUND ROD ASSEMBLY	Ground Rod, Wire & Clamp	Accept.	Proj. Engr. S 501	Traffic Sign Plan Details Proj. Engr.	1/item	1 of each item wire-10 in. length	-----	-----	9 days	Visual inspection by Proj. Engr. Sample only if questionable. Coated steel hardware is not permitted.
DEAD END ROAD INSTALLATION	Hardware (Guard Rail)	Accept.	Proj. Engr. S 501	Mat. Lab	1/size/type/ shipment	1 of each item**	CC* 3	-----	10 days	*Sample not required if listed on CC for metal beam rail. **One piece of each size and type of hardware used is to be submitted.
	Guard Rail	Accept.	-----	Proj. Engr.	-----	-----	CC 3	-----	-----	Fabricator must file Brand Registration and guarantee with Mat. Lab. Visual inspection by Proj. Engr.
	Steel Posts & Spacer Blocks	Accept.	-----	Proj. Engr.	-----	-----	CC 3	-----	-----	Visual inspection by Proj. Engr.
	Timber	Accept.	-----	Proj. Engr. Const. Fab. Insp.	-----	-----	CC 1 & 6	-----	-----	Visual inspection by Proj. Engr.
	Wood Posts & Spacer Blocks	Accept.	-----	Proj. Engr./ Const. Fab. Insp.	-----	-----	CC 1	-----	-----	Visual inspection by Proj Engr.
HARDWARE	Bolts, Nuts & Washers	Accept.	-----	Const. Fab. Insp.	-----	-----	CC 4	-----	-----	Smaller than 3/8 in.
		Accept.	Const. Fab. Insp.	Proj. Engr.	1/size/source	2 of each item*	CC 6	-----	11 days	Larger than 3/8 in. *Two bolts, two nuts and two washers are to be submitted.
	Mounting Bracket, Strap, Seal	Accept.	-----	Const. Fab. Insp.	-----	-----	CC 4	-----	-----	Visual inspection by Proj Engr. Sample only if questionable.
	Rivets	Accept.	-----	Const. Fab. Insp.	-----	-----	CC 4	-----	-----	-----
PILING	Timber	Accept.	**Inspected and stamped by Const. Fab.**	Proj. Engr.			CD 1 & 6	-----	-----	Visual inspection by Proj. Engr.
POSTS (Sign, Marker & Delineator)	Flexible	Accept.	Proj. Engr. S 501	Proj. Engr.	1/shipment* (not to exceed 500)	1 post	CC 1	-----	10 days	(AML for delineator posts) *Visual inspection by Proj. Engr. Sample only if questionable.

SECTION 729 TRAFFIC SIGNS AND DEVICES (Cont'd)

MATERIAL		PURP.	SAMPLED BY / METHOD	TESTED BY	MIN. FREQ.	MIN. QUANT. / CONTAINER	CERT. / DISTR.	SMALL QUANTITY	TYPICAL HANDLING TIME	REMARKS
POSTS (Sign, Marker & Delineator)	Steel, U-Channel & Square Post for small signs	Accept.	Proj. Engr. S 501	Proj. Engr.	One/ shipment* (not to exceed 500 tons)	1 post	CC 1	-----	11 days	*Visual inspection by Proj. Engr. Sample only if questionable.
	Aluminum, Steel, other than U-Channel & Square posts	Accept.	**SEE STRUCTURAL STEEL & ALUMINUM IN SECTION 807 OF THIS MANUAL.**							
OBJECT MARKERS		Accept.	-----	Proj. Engr.	-----	-----	CC 1	-----	-----	Visual inspection by Proj. Engr. Sample only if questionable.
REINFORCEMENT	Bars	Accept.	Proj. Engr. S 501	Proj. Engr.	1/size/source*	48 in. length	CA 1	-----	10 days	*If listed on AML, material with a CA (Distr. 1) need not be sampled. Sample for verification if questionable.
	Stirrups	Accept.	Proj. Engr. S 501	Proj. Engr.	1/size/source*	2 stirrups	CA 1	-----	10 days	*If listed on AML, material with a CA (Distr. 1) need not be sampled. Sample for verification if questionable.
SIGN MOUNTING		Accept.	**Inspected and stamped by Const. Fab. Insp. prior to use. See Section 807 of this manual.**	Const. Fab. Insp.			CA 4	-----	-----	Proj. Engr. receives report form Const. Fab. Insp.
TRAFFIC SIGNS & MILEPOST MARKERS	All Permanent Signs	Accept.	**Inspected and stamped by Const. Fab. Insp. prior to use. See Section 807 of this manual.**	Proj. Engr.			CC 1	-----	10 days	Visual inspection of all incidental Permanent Signs and Markers by Proj. Engr.
	Sign & Marker Sheeting, Paste, Paint and Overlay	Accept.	Const. Fab. Insp. S 501	Proj. Engr.	1/lot/type/ color	5 ft^2	CA 6	-----	10 days	(AML) For reflective sheeting. When questioned by Const. Fab., sample form original lot of reflective sheeting, paste, paint and/or overlay film to be obtained for testing.
		Verif.	Const. Fab. Insp. S 501	Proj. Engr.	1/color/180 days	5 ft^2	-----	-----	10 days	AML for reflective sheeting.
	Aluminum Panels & Structural Shapes	Accept.	Const. Fab Insp. S 501	Proj. Engr.	1/thickness	1 ft x 2 ft or 2 ft. for Structural Shape	CA 6	-----	10 days	When questioned by Const. Fab., sample from original lot of aluminum panel and or Structural Shape shall be obtained for testing.
		Verif.	-----	Proj. Engr.	1/year/source	1 ft x 2 ft or 2 ft. for Structural Shape	-----	-----	-----	-----
WELDING	**SEE SECTION 815 OF THIS MANUAL.**									

SECTION 730 ELECTRICAL SYSTEMS

MATERIAL		PURP.	SAMPLED BY / METHOD	TESTED BY	MIN. FREQ.	MIN. QUANT. / CONTAINER	CERT. / DISTR.	SMALL QUANTITY	TYPICAL HANDLING	REMARKS
ALL ELECTRICAL COMPONENTS & MATERIALS NOT SPECIFICALLY MENTIONED IN THIS SECTION SHALL BE HANDLED IN ACCORDANCE WITH THE REQUIREMENTS FOR ELECTRICAL EQUIPMENT BELOW.										
ANCHOR BOLTS, NUTS AND		Accept.	Proj. Engr. S 501	Proj. Engr.	1/size/type	1 of each item*	CA 7	**-----**	11 days	*One of each size and type of bolt, nut and washer is to be submitted.
BACKFILL	Soil or Granular	**SEE SECTION 701 OF THIS MANUAL.**		Proj. Engr.						
CONCRETE	Mix Designs, Materials &	**SEE SECTION 901 OF THIS MANUAL.**								
CONDUIT		Accept.	**BRIDGE DESIGN APPROVES AND DISTRIBUTES TO PROJ. ENGR.**	Bridge Design						
ELECTRICAL CONDUCTORS		Accept.	-----	Proj. Engr.	-----	-----	CA 1	-----		Visual Inspection by Proj. Engr.
ELECTRICAL EQUIPMENT	Brochures, Certified Dimension Sheets & Description Data	Accept.	**BRIDGE DESIGN APPROVES AND DISTRIBUTES TO PROJ. ENGR.**	Bridge Design						
GROUND ROD ASSEMBLY	Ground Rod, Wire & Clamp	Accept.	Proj. Engr. S 501	Proj. Engr.	1/item	1 of each item Wire - 18 in. length	**-----**	**-----**	9 days	Visual inspection by Proj. Engr. Sample only if questionable. Coated steel hardware is not permitted.
GUARANTY	Contractor's Guaranty	Accept.	**PROJ. ENGR. AND BRIDGE DESIGN APPROVES AND FILES.**	Proj. Engr.						
	Manufacturer's Standard Warranty	Accept.	**PROJ. ENGR. AND BRIDGE DESIGN APPROVES AND FILES**	Proj. Engr.						
HIGH MAST POLES		Accept.	**Inspected and stamped by Const. Fab. Insp. Prior to use. See section 807 of this Manual.**	Const. Fab. Insp.			CA 6	**-----**	**-----**	Inspection report from Const. Fab. Insp. shall be sent to the Proj. Engr.

SECTION 730 ELECTRICAL SYSTEMS (Cont'd)

MATERIAL		PURP.	SAMPLED BY / METHOD	TESTED BY	MIN. FREQ.	MIN. QUANT. / CONTAINER	CERT. / DISTR.	SMALL QUANTITY	TYPICAL HANDLING TIME	REMARKS
LIGHT POLES	Brochures, Certified Dimension Sheets &	Accept.	**Bridge Design Approves and distributes to Proj. Engr.**	Bridge Design				-----	-----	-----
REINFORCING STEEL	Bars	Accept.	Proj. Engr. S 501	Proj. Engr.	1/size/ source*	48 in. length	CA 1	-----	11 days	*If listed on AML, material with a CA (Distr. 1) need not be sampled. Sample for verification if questionable.
SYSTEM TESTS		Accept.	-----	Contractor	-----	-----	-----	-----	-----	Proj. Engr. to observe tests and receive report of test results
TIMBER		Accept.	**Inspected stamped by Const. Fab. Insp. Prior to use. See section 812 of this Manual.**	Proj. Engr./ Const. Fab. Insp.			CD 1 & 6	-----	11 days	Visual inspection by Proj. Engr.

SECTION 731 RAISED PAVEMENT MARKERS

MATERIAL		PURP.	SAMPLED BY / METHOD	TESTED BY	MIN. FREQ.	MIN. QUANT. / CONTAINER	CERT. / DISTR.	SMALL QUANTITY	TYPICAL HANDLING TIME	REMARKS
ADHESIVE (For Pavement Markers)	Bituminous	Prelim. Source Approval	Proj. Engr. S 606	Proj. Engr.	1/lot	0.5 gal friction top can	-----	-----	21 days	(AML)
		Accept.	Proj. Engr. S 606	Proj. Engr.	*	0.5 gal friction top can	CD 1 & 7	-----	11 days	(AML) *When not accompanied by CD. See S 606 for details.
	Epoxy	Prelim. Source Approval	Proj. Engr. S 606	Proj. Engr.	1/lot/ component	0.5 gal friction top can	-----	-----	21 days	(AML)
		Accept.	Proj. Engr. S 606	Proj. Engr.	*	0.5 gal friction top can	CD 1 & 7	-----	11 days	(AML) *When not accompanied by CD. See S 606 for details.
RAISED PAVEMENT MARKERS		Prelim. Source Approval	Proj. Engr. S 607	Proj. Engr.	1/10,000/ type/source	20 markers	-----	-----	10 days	(AML)
		Accept.	Proj. Engr. S 607	Proj. Engr.	*	20 markers	CD 1 & 7	-----	10 days	(AML) *When not accompanied by CD. See S 607 for details.

SECTION 732 PLASTIC PAVEMENT MARKINGS

MATERIAL		PURP.	SAMPLED BY / METHOD	TESTED BY	MIN. FREQ.	MIN. QUANT. / CONTAINER	CERT. / DISTR.	SMALL QUANTITY	TYPICAL HANDLING TIME	REMARKS
SURFACE PRIMER		Accept.	-----	Proj. Engr.	-----	-----	-----	-----	-----	Visual inspection by Proj. Engr. to ensure that manufacturer recommendations are being followed.
GLASS BEADS		Prelim. Source Approval	Proj. Engr.	Proj. Engr.	1/lot	1 - 50 lb bag	-----	-----	10 days	-----
		Accept.	Proj. Engr. S 608	Proj. Engr.	1/lot	1 - 50 lb bag 1 gal can	CD*&CA CD (Physical) CA (Chemical) 1 & 7	-----	10 days	*CD issued when presampled by Dist. Lab and preapproved. Sample only if questionable. Use Sampling Method S 608 when glass beads are shipped in 50 lb bags. Use AASHTO TP 97-11 Section 4 when glass beads are shipped in bulk containers.
PREFORMED PLASTIC MARKING TAPE		Prelim. Source Approval	Proj. Engr.	Proj. Engr.	1/lot	2-6 ft lengths*	-----	-----	10 days	(AML) *Coiled and placed in gallon can.
		Accept.	Proj. Engr. S 609	Proj. Engr.	1/lot	2 - 6 ft lengths*	CD** 1 & 7	-----	10 days	(AML) *Coiled and placed in a gallon can. **CD issued when presampled by Dist. Lab and preapproved. Sample only if questionable.
THERMOPLASTIC MARKING (Hot Applied)		Prelim. Source Approval	Proj. Engr. S 610	Proj. Engr.	1/lot	1 gal can (app. 9 -12 lbs.)	-----	-----	10 days	(AML)
		Accept.	Proj. Engr. S 610	Proj. Engr.	1/lot	1 gal can (app. 9 -12 lbs.)	CD* 1 & 7	-----	10 days	(AML) *CD issued when presampled by District Lab. and preapproved. Sample only if questionable.

SECTION 733 CONCRETE ROADWAY BARRIERS

I-100 2/07

MATERIAL		PURP.	SAMPLED BY / METHOD	TESTED BY	MIN. FREQ.	MIN. QUANT. / CONTAINER	CERT. / DISTR.	SMALL QUANTITY	TYPICAL HANDLING TIME	REMARKS
BARRIER (Precast)		Accept.	**Inspected and stamped by Const. Fab. Insp. prior to use.**	Proj. Engr.			CD 1 & 6	-----	-----	Visual inspection by Proj. Engr.
FOR BARRIERS FABRICATION INSPECTION BY PROJECT ENGINEER, SEE BELOW										
CONCRETE	Mix Designs, Materials & Tests	**SEE SECTION 901 OF THIS MANUAL.**								Air entrainment is required for slip forming.
CURING MATERIALS		**SEE SECTION 805 OF THIS MANUAL.**		Proj. Engr.						
JOINT MATERIALS		Accept.	**SEE SECTION 805 OF THIS MANUAL.**	Proj. Engr.					17 days	-----
REINFORCING STEEL	Deformed Steel Bars	Accept.	Proj. Engr. S 501	Proj. Engr.	1/size/ source*	48 in. length	CA 1	-----	10 days	*If listed on AML, materials with a CA (Dist. 1) need not be sampled. Sample for verification if questionable.
SPECIAL SURFACE FINISH	Masonry Finish	Accept.	Proj. Engr. S 601	Proj. Engr.	1/lot or shipment	1 qt friction top can	CC 1	-----	11 days	(AML) Sample if not accompanied by CC or if questionable.

SECTION 734 RUBBLIZING PORTLAND CEMENT CONCRETE PAVEMENT

I-101 2/07

MATERIAL		PURP.	SAMPLED BY / METHOD	TESTED BY	MIN. FREQ.	MIN. QUANT. / CONTAINER	CERT. / DISTR.	SMALL QUANTITY	TYPICAL HANDLING TIME	REMARKS
BACKFILL MATERIAL	Base Course Aggregate	Accept.	Proj. Engr.		1/1,000 yd^3	1 full sample sack	-----	50 yd^3	4 days	-----
TEST PIT		Accept.	Proj. Engr.	Proj. Engr.	-----	-----	-----	-----	-----	For purpose of approving equipment and pattern. Document in Field Book.

SECTION 735 MAILBOXES AND MAILBOX SUPPORTS

I-102 2/07

MATERIAL		PURP.	SAMPLED BY / METHOD	TESTED BY	MIN. FREQ.	MIN. QUANT. / CONTAINER	CERT. / DISTR.	SMALL QUANTITY	TYPICAL HANDLING TIME	REMARKS
MAILBOXES AND MAILBOX SUPPORTS	**VISUAL INSPECTION BY PROJECT ENGINEER.**									

SECTION 736 TRAFFIC SIGNALS

MATERIAL		PURP.	SAMPLED BY / METHOD	TESTED BY	MIN. FREQ.	MIN. QUANT. / CONTAINER	CERT. / DISTR.	SMALL QUANTITY	TYPICAL HANDLING TIME	REMARKS
ANCHOR BOLTS (Pedestal)		Accept.	Proj. Engr. S 50l	Proj. Engr.	1/type/lot or shipment	1 bolt	-----	-----	11 days	-----
BACKFILL	Usable Soil	**SEE SECTION 701 OF THIS MANUAL.**								
CONCRETE	Mix Designs, Materials & Tests	**SEE SECTION 901 OF THIS MANUAL.**								
ELECTRICAL CONDUCTORS		Accept.	-----	Proj. Engr.	-----	-----	CA 1	-----	-----	Visual inspection by Proj. Engr.
ELECTRICAL JUNCTION BOX		Accept.	-----	Proj. Engr.	-----	-----	CC 1*	-----	10 days	*Submit to Traffic Services. Traffic Services will return approved copy. Visual inspection by Proj. Engr.
GROUND RODS		Accept.	Proj. Engr. S 50l	Proj. Engr.	1/item*	1 of each item Wire - 18 in. length	-----	-----	9 days	*Visual inspection by Proj. Engr. Sample only if questionable. Coated steel hardware is not permitted.
GUY COMPONENTS (Hardware)		Accept.	Proj. Engr. S 50l	Proj. Engr.	1/type/lot or shipment	1 of each item*	-----	-----	12 days	*One piece of each type of hardware used is to be submitted.
MANHOLE FRAMES AND COVERS		**SEE SECTION 807 (CASTINGS) OF THIS MANUAL.**		Const. Fab. Insp.						
METAL POLES FOR TRAFFIC SIGNAL SYSTEMS		Accept.	-----	Traffic Services and Operations Engineer	-----	-----	CA 1 & 6*	-----	-----	*Submit to Traffic Services. Traffic Services will return approved copy. Visual inspection by Proj. Engr.
PRECAST REINFORCED CONCRETE JUNCTION BOXES & MANHOLES		Accept.	-----	Proj. Engr.	-----	-----	CC 1*	-----	-----	*Submit to Traffic Services. Traffic Services will return approved copy. Visual inspection by Proj. Engr.
REINFORCING STEEL	Bars	Accept.	Proj. Engr. S 501	Proj. Engr.	1/size/ source*	48 in. length	CA 1	-----	10 days	*If listed on the AML materials with a CA (Dist. 1) need not be sampled. Sample for verification if questionable.
RIGID METAL ELECTRICAL CONDUIT	Brochures, Drawings, Equipment Submittals	Accept.	-----	Traffic Services and Operations Engr.	-----	-----	CA 1*	-----	-----	*Submit to Traffic Services. Traffic Services will return approved copy. Visual inspection by Proj. Engr.
STEEL STANDARDS & MAST ARMS		-----	-----	Traffic Services and Operations	-----	-----	CC 1*	-----	-----	*Submit to Traffic Services. Traffic Services will return approved copy. Visual inspection by Proj. Engr.
SUPPORT CABLE		Accept.	-----	Proj. Engr.	-----	-----	CC 1*	-----	-----	*Submit to Traffic Services. Traffic Services will return approved copy. Visual inspection by Proj. Engr.
TIMBER POLES		Accept.	**Inspected and stamped by Const. Fab. Insp. prior to**	Proj. Engr.			CD 1 & 6	-----	-----	Visual inspection by Proj. Engr.

SECTION 736 TRAFFIC SIGNALS (Cont'd)

MATERIAL		PURP.	SAMPLED BY / METHOD	TESTED BY	MIN. FREQ.	MIN. QUANT. / CONTAINER	CERT. / DISTR.	SMALL QUANTITY	TYPICAL HANDLING TIME	REMARKS
TRAFFIC SIGNAL CABLE, SIGNAL HEADS, DETECTORS, SIGNAL HARDWARE AND EQUIPMENT	Brochures, Drawings, Equipment Submittals	-----	-----	Traffic Services and Operations Engr.	-----	-----	CC 1*	-----	-----	*Submit to Traffic Services. Traffic Services will return approved copy. Visual inspection by Proj. Engr.

SECTION 737 PAINTED TRAFFIC STRIPING

MATERIAL		PURP.	SAMPLED BY / METHOD	TESTED BY	MIN. FREQ.	MIN. QUANT. / CONTAINER	CERT. / DISTR.	SMALL QUANTITY	TYPICAL HANDLING TIME	REMARKS
GLASS BEADS		Prelim. Source Approval	Proj. Engr.	Proj. Engr.	1/lot	1 - 50 lb bag	-----	-----	10 days	-----
		Accept.	Proj. Engr. S 608	737.02 1015.13 Proj. Engr.	1/lot	1 - 50 lb bag 1 gal can	CD*&CA CD (Physical) CA (Chemical) 1 & 7	-----	10 days	*CD issued when presampled by Dist. Lab and preapproved. Sample only if questionable. Use Sampling Method S 608 when glass beads are shipped in 50 lb bags. Use AASHTO TP 97-11 Section 4 when glass beads are shipped in bulk containers.
TRAFFIC PAINT	Water-based	Prelim. Source Approval	Proj. Engr. S 608	Proj. Engr.	1/lot	1 pt friction top can	-----	-----	11 days	(AML)
		Accept.	Proj. Engr. S 608	Proj. Engr.	1/lot	1 pt friction top can	CD* 1 & 7	-----	11 days	(AML) *CD issued when presampled by the Dist. Lab and preapproved. Sample only if questionable.

SECTION 738 MULCH SODDING

MATERIAL		PURP.	SAMPLED BY / METHOD	TESTED BY	MIN. FREQ.	MIN. QUANT. / CONTAINER	CERT. / DISTR.	SMALL QUANTITY	TYPICAL HANDLING TIME	REMARKS
AGRICULTURAL LIME		Accept.	**SEE SECTION 718 OF THIS MANUAL.**	Proj. Engr.						
FERTILIZER		**SEE SECTION 718 OF THIS MANUAL.**								
MULCH SOD		Accept.	-----	Roadside Development Personnel	-----	-----	-----	-----	-----	*Visual inspection by Roadside Development personnel prior to mulching.
WATER		Accept.	Proj. Engr. S 303	Proj. Engr.	1/source*	1 qt plastic bottle	-----	-----	11 days	*Visual inspection by Proj. Engr. Sample only if questionable.
TOPSOIL		**SEE SECTION 715 OF THIS MANUAL**								

SECTION 739 HYDRO-SEEDING

MATERIAL		PURP.	SAMPLED BY / METHOD	TESTED BY	MIN. FREQ.	MIN. QUANT. / CONTAINER	CERT. / DISTR.	SMALL QUANTITY	TYPICAL HANDLING TIME	REMARKS
AGRICULTURAL LIME		**SEE SECTION 718 OF THIS MANUAL.**		Proj. Engr.						
FERTILIZER		**SEE SECTION 718 OF THIS MANUAL.**		Proj. Engr.						
MULCHING	Other Materials	Accept.	Proj. Engr. S 601	Proj. Engr.	1/source*	3 full sample sacks	-----	-----	-----	*Visual inspection by Proj. Engr. Sample only if questionable.
	Wood Fiber	Accept.	Proj. Engr. S 601	Proj. Engr.	1/source*	3 full sample sacks	-----	-----	-----	*Visual inspection by Proj. Engr. Sample only if questionable.
SEED		**SEE SECTION 717 OF THIS MANUAL.**		Proj. Engr.						
WATER		Accept.	Proj. Engr. S 303	Proj. Engr.	1/source*	1 qt plastic bottle	-----	-----	11 days	*Visual inspection by Proj. Engr. Sample only if questionable.
WATER MANAGEMENT GEL, POLYACRYLAMIDE TACKIFIER, AND		Accept.	-----	Proj. Engr.	-----	-----	-----	-----	-----	Visual inspection by Proj. Engr. of all ingredients prior to mixing.

SECTION 802 STRUCTURAL EXCAVATION AND BACKFILL

MATERIAL		PURP.	SAMPLED BY / METHOD	TESTED BY	MIN. FREQ.	MIN. QUANT. / CONTAINER	CERT. / DISTR.	SMALL QUANTITY	TYPICAL HANDLING TIME	REMARKS
BACKFILL	Reinforced Box Culverts	Accept.	**SEE SECTION 701 OF THIS**	Proj. Engr.						
	Structures other than Reinforced Box Culverts	Accept.	-----	Proj. Engr.	-----	-----	-----	-----	-----	Material shall be of acceptable quality and uniformly compacted by approved methods to the satisfaction of the Proj. Engr.
CONCRETE	Compressive Strength	*	Proj. Engr. S 301 TR 226	Proj. Engr.	3 cyl/ location	cylinder mold	-----	-----	10 days	*Used to determine earliest date for placement of backfill next to structures.

SECTION 803 SHEET PILES

MATERIAL		PURP.	SAMPLED BY / METHOD	TESTED BY	MIN. FREQ.	MIN. QUANT. / CONTAINER	CERT. / DISTR.	SMALL QUANTITY	TYPICAL HANDLING TIME	REMARKS
HARDWARE		Accept.	Proj. Engr. S 501	Proj. Engr.	1/size/type/ shipment	2 of each item*	-----	-----	10 days	*Two (2) pieces of each size and type of hardware used are to be submitted.
PAINT AND PROTECTIVE COATINGS	Coal Tar Epoxy	**SEE SECTION 811 OF THIS MANUAL.**								
PERMANENT SHEET PILES	Aluminum or Steel	Accept.	-----	Const. Fab. Insp.	-----	-----	CD OR CC* 2	-----	-----	*CC if inspected by DOTD
	Aluminum or Steel	Accept.	**Inspected and stamped by Const. Fab. Insp. prior to use. See Section 805 of this manual.**	Const. Fab. Insp.			CD 1	-----	-----	Visual inspection by Proj. Engr.
	Timber Treated & Untreated	Accept.	**Inspected and stamped by Const. Fab. Insp. prior to use. See Section 812 of this manual.**	Const. Fab. Insp.			CD 1 & 6	-----	-----	Visual inspection by Proj. Engr.
TREATMENT OF PILE HEADS		**SEE SECTION 812 OF THIS MANUAL.**								
WELDING		**SEE SECTION 815 OF THIS MANUAL.**								

SECTION 804 DRIVEN PILES

MATERIAL		PURP.	SAMPLED BY / METHOD	TESTED BY	MIN. FREQ.	MIN. QUANT. / CONTAINER	CERT. / DISTR.	SMALL QUANTITY	TYPICAL HANDLING TIME	REMARKS
BACKFILL	Granular Type Material	Accept.	Proj. Engr. S 101	Proj. Engr.	1/1,000 yd^3	1 full sample sack	-----	-----	-----	Visual inspection by Proj. Engr. Sample only if questionable
CONCRETE PILES (Cast-in- Place)	Concrete (Mix Designs, Materials & Tests)	**SEE SECTION 901 OF THIS MANUAL.**								
	Reinforcing Steel	Accept.	Proj. Engr. S 501	Proj. Engr.	1/size/grade/ 150,000 lb/ source	48 in. length	CA 1	-----	10 days	(AML) *If listed on AML, material with a CA (Distr. 1) need not be sampled. Sample if questionable.
	Steel Pipe Pile	Accept.	-----	Proj. Engr.	-----	-----	CA 4	-----	-----	Visual inspection by Proj. Engr.
	Steel Shell	Accept.	-----	Proj. Engr.	-----	-----	-----	-----	-----	Visual inspection by Proj. Engr.
CONCRETE PILES (Precast)	Pile	Accept.	**Inspected and stamped by Const. Fab. Insp. Unit prior to use. See Section 805 of this Manual.**	Const. Fab. Insp.			CD 1 & 6	-----	-----	Visual inspection by Proj. Engr. For specific details see EDSM III.2.5.7.
HYDRAULIC JACKS		Accept.	**Calibrated by an approved, independent calibration service and a certified lab report furnished to the Mat. Lab for approval and distribution to the Proj. Engr.**	Proj. Engr.			CA 5	-----	12 days	The system must be calibrated at the beginning of each project and as required.
PAINT AND PROTECTIVE COATINGS	Coal Tar Epoxy	**SEE SECTION 811 OF THIS MANUAL.**								

MATERIAL		PURP.	SAMPLED BY / METHOD	TESTED BY	MIN. FREQ.	MIN. QUANT. / CONTAINER	CERT. / DISTR.	SMALL QUANTITY	TYPICAL HANDLING TIME	REMARKS
STEEL PILES, STEEL PIPE		Accept.	-----	Const. Fab. Insp.	-----	-----	CA 4	-----	-----	Visual inspection by Proj. Engr.
TIMBER PILES	Treated and Untreated	Accept.	**Inspected and stamped by Const. Fab. Insp. prior to use. See Section 812 of this manual.**	Const. Fab. Insp.			CD 1 & 6	-----	-----	Visual inspection by Proj. Engr.
TREATMENT OF TIMBER PILE HEADS	Canvas	Accept.	Proj. Engr. S 601	Proj. Engr.	1/shipment*	18 in. x 18 in.	-----	-----	10 days	*Visual inspection by Proj. Engr. Sample only if questionable.
	Coal Tar Pitch, Creosote Oil, Asphalt & Copper Napthanate	Accept.	Proj. Engr. S 201	Proj. Engr.	1/shipment*	1 qt friction top can	-----	-----	10 days	*Visual inspection by Proj. Engr. Sample only if questionable.
	Fabric Covering	Accept.	Proj. Engr. S 601	Proj. Engr.	1/shipment*	18 in. x 18 in.	-----	-----	10 days	*Visual inspection by Proj. Engr. Sample only if questionable.
	Galvanized Metal Covering	Accept.	Proj. Engr. S 501	Proj. Engr.	1/shipment*	6 in. x 6 in.	-----	-----	10 days	*Visual inspection by Proj. Engr. Sample only if questionable.
	Galvanized Nails, Staples & Wire	Accept.	Proj. Engr. S 501	Proj. Engr.	1/size/type/ shipment*	12 of each item** wire - 24 in.	-----	-----	10 days	*Visual inspection by Proj. Engr. Sample only if questionable. **Twelve nails and twelve staples are to be submitted.
WELDING	**SEE SECTION 815 OF THIS MANUAL.**									

SECTION 805 STRUCTURAL CONCRETE

MATERIAL		PURP.	SAMPLED BY / METHOD	TESTED BY	MIN. FREQ.	MIN. QUANT. / CONTAINER	CERT. / DISTR.	SMALL QUANTITY	TYPICAL HANDLING TIME	REMARKS
FOR DETAILS ON CONCRETE TESTS, MIX DESIGNS AND MATERIALS (ADMIXTURES, AGGREGATES, CEMENT AND WATER) SEE SECTION 901 0F THIS MANUAL.										
BACKFILL		Accept.	**SEE SECTION 802 OF THIS**	Proj. Engr.						
BEARING PADS	Elastomeric	Accept.	Const. Fab. Insp.* S 601	Proj. Engr.	1/100 pads/type** /lot	1 pad	CA 5	-----	14 days	(AML) *Proj. Engr. sample at destination only if not sampled at site of source supplier. **Plain or Laminated.
	Masonry	Accept.	Proj. Engr. S 601	Proj. Engr.	1/type	1 pad	CA 5	-----	10 days	-----
BOX CULVERT UNITS (Precast)	Gasket Material	Accept.	**SEE SECTION 701 OF THIS**	Proj. Engr.			CC 1	-----	-----	(AML) Gasket test report lab no. listed on precast unit CC.
	Precast Concrete Unit	Prelim. Source Approval	**Inspected and stamped by MFR prior to use.**	MFR			CD 1	-----	-----	(AML) *Shall not exceed 300 joints. Each joint shall be stamped when approved.
			MFR S 301 S 601		1/300 joints/size or 3 consecutive days production/ size*	4 cyl/set 6 in. x 12 in. cylinder mold	-----	-----	-----	
		Verif	Const. Fab. Insp. S 601	Const. Fab. Insp. MFR	1/180 day production/ plant	4 cyl/set 6 in. x 12 in. cylinder mold	-----	-----	-----	
		Accept.	**Inspected and stamped by MFR prior to use.**	Proj. Engr.			CD 1	-----	-----	(AML) Visual Inspection by Proj. Engr. CD to include lot number for Gasket Materials.
BRIDGE MEMBERS	Concrete Precast	Accept.	**Inspected and stamped by CONST. FAB. INSP. prior to use.**	Const. Fab. Insp.			CD 1	-----		Visual inspection by Proj. Engr. For specific details see EDSM III.2.5.7.
CONCRETE ANCHOR SYSTEMS	Anchor Bolts	Accept.	Proj. Engr. S 601	Plans Proj. Engr.	1/size/ shipment	2 bolts*	-----	-----	11 days	*Two bolts of each size used are to be submitted.
	Cartridge Systems	Accept.	Proj. Engr. S 601	Proj. Engr.	1/size/type/ lot or shipment**	2 of each item*	-----	-----	14 days	(AML) Includes bolts & nuts intended to be used with the system. *Two pieces of each size and type of item used are to be submitted. **Visual inspection by Proj. Engr. Sample only if questionable.

SECTION 805 STRUCTURAL CONCRETE (Cont'd)

MATERIAL		PURP.	SAMPLED BY / METHOD	TESTED BY	MIN. FREQ.	MIN. QUANT. / CONTAINER	CERT. / DISTR.	SMALL QUANTITY	TYPICAL HANDLING TIME	REMARKS
CONCRETE ANCHOR SYSTEMS (Cont'd)	Grout Systems (Resin or Cementitious)	Accept.	Proj. Engr. S 601	Mat. Lab	1/lot or shipment	1 qt friction top can	-----	-----	14 days	(AML) Includes bolts & nuts intended to be used with the system. Visual inspection by Proj. Engr. Sample only if questionable.
	Mechanical Systems	Accept.	Proj. Engr. S 601	Proj. Engr.	1/size/type/ lot or shipment**	2 of each item*	-----	-----	10 days	(AML) *Two of each size and type of item used are to be submitted. **Visual inspection by Proj. Engr. Sample only if questionable.
CONCRETE (In-Place)	Compressive Strength	*	Proj. Engr. S 301 TR226	Proj. Engr.	3 cyl/ structural member	cylinder mold			10 days	*To determine strength for form removal or exposure to construction traffic.
	Deck Surface Finish	Quality Control	Contractor*	Contractor	each deck	-----	-----	-----	-----	Plastic Concrete *Surface must be checked on bridge decks using an approved 10 ft metal static straightedge supplied by the
		Verif.	Proj. Engr.	Proj. Engr.	each deck	-----	-----	-----	-----	Proj. Engr. to observe contractor check bridge deck surface.
	Tine Texturing	Quality Control	Contractor TR 229	Contractor	*	-----	-----	-----	-----	Plastic Concrete *Sufficient number of random checks to assure the required texture depth is achieved.
		Accept.	Proj. Engr. TR 229	Proj. Engr.	2/lot	-----	-----	-----	-----	Performed on hardened concrete.
CURING MATERIALS	Burlap Cloth	Accept.	Proj. Engr. S 601	Proj. Engr.	1/shipment*	36 in. x 36 in.	-----	-----	10 days	*Visual inspection by the Proj. Engr. Sample only if questionable.
	Burlap & White Polyethylene	Accept.	Proj. Engr. S 601	Proj. Engr.	1/shipment*	36 in. x 36 in.	-----	-----	10 days	*Visual inspection by Proj. Engr. Sample only if questionable.
	Liquid Membrane-Forming	Prelim. Source Approval	Mfr. S 601	Proj. Engr.	1/6 months	1 qt friction top can	-----	-----	21 days	(AML)
		Accept.	Proj. Engr. S 601	Proj. Engr.	1/shipment*	1 qt friction top can	CC 1	-----	10 days	(AML) *Visual inspection by Proj. Engr. Sample only if
	Waterproof Paper	Accept.	Proj. Engr. S 601	Proj. Engr.	1/shipment*	36 in. x 36 in.	-----	-----	10 days	*Visual inspection by the Proj. Engr. Sample only if questionable.
	White Polyethylene Sheeting	Accept.	Proj. Engr. S 601	Proj. Engr.	1/shipment*	36 in. x 36 in.	-----	-----	10 days	*Visual inspection by the Proj. Engr. Sample only if questionable.
EPOXY RESIN SYSTEMS	Epoxy	Accept.	-----	Proj. Engr.	1/lot or shipment	-----	CC 1	1 gal	-----	(AML)
		Verif.	Proj. Engr. S 601		1/lot or shipment	1 qt each component friction top	CC 1	1 gal	11 days	(AML) Copy of CC shall be submitted with sample.
FORM RELEASE AGENTS		Accept.	-----		-----	-----	-----	-----	-----	(AML) Visual inspection by the Proj. Engr. Sample only if questionable.
GEOTEXTILE FABRIC		Accept.	Proj. Engr. S 601	Proj. Engr.	1/type/ source/ shipment	3 lin ft/roll width of fabric*	CC 1	150 yd^2	10 days	(AML) *Sample a minimum of 18ft2. Visual inspection, sample only if questionable.

SECTION 805 STRUCTURAL CONCRETE (Cont'd)

MATERIAL		PURP.	SAMPLED BY / METHOD	TESTED BY	MIN. FREQ.	MIN. QUANT. / CONTAINER	CERT. / DISTR.	SMALL QUANTITY	TYPICAL HANDLING TIME	REMARKS
JOINT MATERIALS	Adhesive-Lubricant	Accept.	Proj. Engr. S 601	Proj. Engr.	1/lot or shipment	1 qt friction top can	-----	-----	10 days	(AML) For use with preformed elastomeric compression joint seal. Mix well before sampling. Seal can tightly.
	Polyurethane Polymer	Prelim. Source Approval	Proj. Engr. S 611	Proj. Engr.	1/batch or shipment	one unit of each component*	CA 7	-----	14 days	(AML) *One unit of each component selected at random and submitted as sample.
		Accept.	Proj. Engr. S 611	Proj. Engr.	1/shipment*	-----	CD 1 & 7	-----	14 days	(AML) *When material is accompanied by a CD, sample only if questionable.
		Accept.*	Proj. Engr. S 611	Proj. Engr.	1/batch or shipment	**	CA 7	2,000 yd^2	14 days	(AML) *When material is not accompanied by a CD. **One unit of each component selected at random and submitted as sample.
	Reinforced Elastomeric Joint Seal	Accept.	-----	Proj. Engr.	-----	-----	CC & CA	-----	-----	Elastomer - CA; Steel - CC. Visual inspection by Proj. Engr.
	Steel Joint	Accept.	**Inspected and stamped by Const. Fab. Insp. Unit prior to use. See Section 807 of this Manual.**	Const. Fab. Insp.			CA 6	-----	-----	Proj. Engr. to receive inspection report from Const. Fab. Insp.
	Strip Seal Joint	Accept.	**See Section 807 of this**	MFR			CA 6	-----	-----	Visual inspection by Proj. Engr. Contact CONST. FAB. INSP. If questionable.
NON-SHRINK GROUT		Accept.	Proj. Engr. S 601	Plans Proj. Engr.	1/shipment/ lot	1 full sack, 15 lb min.*	-----	-----	16 days	(AML) *Sample shall be submitted in an unbroken moisture proof
PRECAST CONCRETE (Non-Prestressed other than Bridge Members)	Precast Unit	Accept.	**Inspected and stamped by Const. Fab. Insp. Unit prior to use.**	Proj. Engr.			CD 1 & 6	-----	-----	CD must include Lot No. for gasket material if applicable.
	Admixtures	Accept.	Const. Fab. Insp. S 601	Proj. Engr.	1/type/mfr. batch	1 pt friction top can	CC 6	-----	10 days	(AML) Visual inspection by Construction Fabrication Inspection.
	Aggregate (Coarse & Fine)	Accept.	Const. Fab. Insp. S 101	Proj. Engr.	*	1 full sample sack	-----	-----	4 days	(AML) *Visual inspection by Const. Fab. Insp. Sample only if questionable.
	Cement	**SEE SECTION 901 OF THIS MANUAL.**					CC 1 & 6	-----	11 days	-----
	Compressive Strength	Prelim. Source Approval	Const. Fab. Insp. or MFR S 301	Mfr.	1/pour*	Three cylinder molds	-----	-----	30 days	*A pour is an identifiable pour not to exceed 50 yd^3.

SECTION 805 STRUCTURAL CONCRETE (Cont'd)

MATERIAL		PURP.	SAMPLED BY / METHOD	TESTED BY	MIN. FREQ.	MIN. QUANT. / CONTAINER	CERT. / DISTR.	SMALL QUANTITY	TYPICAL HANDLING TIME	REMARKS
PRECAST CONCRETE (Non-Prestressed Other than Bridge Members) (Cont'd)		Accept.	Const. Fab. Insp or Proj. Engr	Proj. Engr.	1/pour*	Three cylinder molds	-----	-----	30 days	*A pour is an identifiable pour not to exceed 50 yd^3.
	Gasket Material	**SEE SECTION 701 OF THIS MANUAL.**					CD 1 & 6	-----	-----	-----
	Mix Design	Design	-----	Const. Fab. Insp.	1/class/ material source/plant	-----	-----	-----	-----	Contractor shall submit to Const. Fab. Insp. the standard mix design form indicating the intended source of all materials and mix design. Approval by Const. Fab. Unit. Engineer required prior to work.
	Reinforcing Steel Bars	Accept.	Const. Fab. Insp. S 501	Proj. Engr.	1/size/ grade/ 150,000 lb/ source	48 in. length	CA 6	-----	10 days	(AML) Sample if questionable.
	Welded Wire Fabric	Accept.	Const. Fab. Insp. S 501	Const. Fab. Insp.	1/shipment	48 in. x 48 in.	CA 6	-----	11 days	Sample only if questionable.
PRECAST CONCRETE (Prestressed & Non-Prestressed Bridge Members	Precast Unit	Accept.	**Inspected and stamped by**	Const. Fab. Insp.			CD 1 & 6	-----	-----	CD must include lot no. for elastormeric bearing pads if applicable.
	Admixtures	Accept.	Const. Fab. Insp. S 601	Proj. Engr.	1/type/mfr. batch	1 pt friction top can	-----	-----	10 days	(AML)
	Aggregate (Coarse & Fine)	Quality Control	Mfr. S 101	Mfr.	1/lot*	1 full sample sack	-----	-----	-----	(AML) Gradation and Moisture. *Lot to be identifiable pour up to 200 yd3 of concrete.
		Accept.	Const. Fab. Insp. S 101	Proj. Engr. or Const. Fab. Insp.	2/month*	1 full sample sack	-----	-----	3 days	(AML) *Const. Fab. Insp. to witness manufacturer's QC testing.
	Cement	**SEE SECTION 901 OF THIS MANUAL.**					CC 6 & 7	-----	-----	-----
	Compressive Strength & Surface Resistivity	Accept.	Const. Fab. Insp. S 301 TR 266 & TR 233	Const. Fab. Insp.	7 cyl/pour*	Cylinder mold	-----	-----	30 days	*Cylinder cured under same conditions as members. Two cylinders are tested for 28 day strength. For precast box culverts, cylinders shall be in accordance with ASTM C789.
	Elastomeric Bearing Pads	Accept.	Const. Fab. Insp. S 601	Proj. Engr.	1/100 pads/type/lot	1 pad	CA 5	-----	14 days	(AML)
	Epoxy Resin Systems	Accept.	Const. Fab. Insp. S 601	Proj. Engr.	1/lot or shipment	1 qt/ component friction top can	-----	-----	10 days	(AML)
	Mix Design	Design	-----	Const. Fab. Insp.	1/class/ material source/plant	-----	-----	-----	-----	Contractor shall submit to Const. Fab. Insp. the standard mix design for indicating the intended source of all materials and the mix design. Approval by Const. Fab. Insp. required prior to work.
	Steel Bars & Spiral Reinforcement	Accept.	Const. Fab. Insp. S 501	Proj. Engr.	1/size/grade/ 150,000 lb/ source	48 in. length	CA 6	-----	10 days	(AML) Sample if questionable.

SECTION 805 STRUCTURAL CONCRETE (Cont'd)

MATERIAL		PURP.	SAMPLED BY / METHOD	TESTED BY	MIN. FREQ.	MIN. QUANT. / CONTAINER	CERT. / DISTR.	SMALL QUANTITY	TYPICAL HANDLING TIME	REMARKS
PRECAST CONCRETE (Prestressed & Non-Prestressed Bridge	Strands for Prestressing	Accept.	Const. Fab. Insp. S 501	Proj. Engr.	1/size/ grade/ source/proj.* per heat no.	3 strands 5 ft length	-----	-----	11 days	*Not to exceed 200 tons. Manufacturer's Load/Elongation curve to accompany sample.
	Welded Wire Fabric	Accept.	Const. Fab. Insp. S 501	Proj. Engr.	1/shipment	48 in. x 48 in.	CA 6	-----	11 days	Visual inspection by Const. Fab. Sample if questionable.
PRECAST PRESTRESSED FORMS	Bearing Strips and Adhesive	Accept.	-----		-----	-----	-----	-----	-----	Visual inspection by Proj. Engr.
	Concrete Deck Forms (Stay In Place Panels)	Accept.	**Inspected and stamped by Const. Fab. Insp. Prior to use. See precast concrete (Prestressed & Non-Prestressed Bridge Members) in this section.**	Const. Fab. Insp.			CD 1	-----	-----	Visual inspection by Proj. Engr. For specific details see EDSM III.2.5.7.
REINFORCE	Bars	**SEE SECTION 806 OF THIS MANUAL.**								
SPECIAL SURFACE FINISH	Concrete	Accept.	Proj. Engr. S 601	Proj. Engr.	1/lot or shipment*	1 qt. component friction top can	CC 1	-----	10 days	(AML) *Visual inspection by Proj. Engr. Sample if questionable.
WATER STOPS	Copper	Accept.	Proj. Engr. S 601	Proj. Engr.	1/lot or shipment*	24 in. length	CA 3	-----	-----	*Visual inspection by Proj. Engr. Sample if questionable.
	Polyvinyl Chloride	Accept.	Proj. Engr. S 601	Proj. Engr.	1/shipment*	36 in. length	CC 3	-----	-----	*Visual inspection by Proj. Engr. Sample if questionable.
	Rubber	Accept.	Proj. Engr. S 601	Proj. Engr.	1/lot or shipment*	36 in. length	CA 3	-----	-----	*Visual inspection by Proj. Engr. Sample if questionable.

SECTION 806 REINFORCEMENT

MATERIAL		PURP.	SAMPLED BY / METHOD	TESTED BY	MIN. FREQ.	MIN. QUANT. / CONTAINER	CERT. / DISTR.	SMALL QUANTITY	TYPICAL HANDLING TIME	REMARKS
REINFORCEMENT	Bars (Epoxy Coated)	Accept.	Proj. Engr. S 501	Proj. Engr.	1/size/grade/ 150,000 lb /source	2 bars approx. 48 in. in length	CC 3	-----	10 days	(AML) Cert. of Compliance provided by the applicator.
	Bars & Spirals	Accept.	Proj. Engr. S 501	Proj. Engr.	1/size/grade/ 150,000 lb /source*	48 in. length	CA 1	-----	10 days	(AML) *Material with a CA need not be sampled for acceptance. Sample if questionable.
		Verif.	Proj. Engr. S 501	Proj. Engr.	1/project	48 in. length	CA 1	-----	10 days	Sample most prevalent size & grade.
	Chairs or Metal Bar Supports	Accept.	Proj. Engr. S 501	Proj. Engr.	1/type*	1 chair	-----	-----	-----	*Visual inspection by the Proj. Engr. Sample only if questionable.
	Patching Material (Epoxy Coated	Accept.	Proj. Engr. S 601	Proj. Engr.	1/source	1 qt friction top can	CC 3	-----	10 days	(AML)
	Stirrups, Tie Bars	Accept.	Proj. Engr. S 501	Proj. Engr.	1/size/ 150,000 lb*	2 of each item	CA 1	-----	10 days	(AML) *If listed on AML, material with a CA need not be sampled. Sample if questionable.
SPLICING	Mechanical Butt Splice	Contractor Qualificati	Proj. Engr . S 501	Proj. Engr.	1/size*	2 splices/each size	-----	-----	10 days	(AML) *Separate samples per horizontal and vertical positions. Test prior to use.
		Accept.	Proj. Engr. S 501	Proj. Engr.	1/size/25 splices*	1 splice 3 ft length	-----	-----	10 days	
	Welded Butt Splice	**SEE SECTION 815 OF THIS MANUAL.**								

SECTION 807 STRUCTURAL METALS

MATERIAL		PURP.	SAMPLED BY / METHOD	TESTED BY	MIN. FREQ.	MIN. QUANT. / CONTAINER	CERT. / DISTR.	SMALL QUANTITY	TYPICAL HANDLING	REMARKS
BEARING & EXPANSION	Bronze	Accept.	-----	Proj. Engr.	-----	-----	CA 6	-----	-----	Visual inspection by Proj. Engr. Contact Const. Fab. If questionable.
	Copper-Alloy (Rolled)	Accept.	-----	Proj. Engr.	-----	-----	CA 6	-----	-----	Visual inspection by Proj. Engr. Contact Const. Fab. If questionable.
	PTFE Bearing Assembly	Accept.	-----	Proj. Engr.	-----	-----	CA 6	-----	-----	Visual inspection by Proj. Engr. Contact Const. Fab. If questionable.

SECTION 807 STRUCTURAL METALS (Cont'd)

MATERIAL		PURP.	SAMPLED BY / METHOD	TESTED BY	MIN. FREQ.	MIN. QUANT. / CONTAINER	CERT. / DISTR.	SMALL QUANTITY	TYPICAL HANDLING TIME	REMARKS
BEARING PA	Elastomeric	Accept.	Const. Fab. Insp.* S 601	Proj. Engr.	1/100 pads/type** /lot	1 pad	CA 5	-----	14 days	(AML) *Proj. Engr. samples at destination only if not sampled at site of source or supplier. **Plain or Laminated.
	Masonry	Accept.	Proj. Engr. S 601	Proj. Engr.	1/type/size	1 pad	CA 5	-----	10 days	-----
CASTINGS	Metal for Castings	Accept.	Const. Fab. Insp. S 601	Const. Fab. Insp.	1/heat	1 test bar*	CA 6	-----	-----	*Const. Fab. Insp. may submit samples to Mat. Lab for testing if questionable.
	Unit	Accept.	-----	Const. Fab. Insp.	-----	-----	CA 6	-----	-----	Proj. Engr. to receive form 4148 (Certificate of Cast Iron Covers, Grates, etc.) from Contractor.
CONCRETE ANCHOR STUDS		Accept.	Proj. Engr. S 501	Const. Fab. Insp.	1/diameter/ shipment	2 of each item*	CA 4	-----	-----	Sample if not accompany by report from construction fab.
FASTENERS (Field Installation)	Bolts, Nuts & Washers	Accept.	Proj. Engr. S 501	Proj. Engr.	1/diameter/ shipment	2 of each item*	CC 1	-----	10 days	*Two bolts, two nuts and two washers are to be submitted. Copy of CC to accompany sample and ID.
	High Strength Bolts, Nuts & Washers and Tension Indicators	Accept.	Proj. Engr. S 501	Proj. Engr.	1/type/size/ heat	2 of each item*	CA 1	-----	10 days	* Copy of CA to accompany sample and ID. Similar size, type and heat of nut and washer need not be submitted.
	Steel Lockpins and Collars	Accept.	Proj. Engr. S 501	Proj. Engr.	1/lot or shipment	1 pin and collar	CC 1	-----	10 days	Copy of CC to accompany sample ID.
FASTENERS (Shop Installation)	Bolts, Nuts & Washers	Accept.	Const. Fab. Insp. S 501	Proj. Engr.	1/diameter/ shipment	3 of each item*	CC 6	-----	10 days	Proj. Engr . to receive inspection report from Const. Fab. Insp. * Three bolts, 3 nuts and 3 washers are to be submitted. Copy of CC to accompany sample ID.
	High Strength Bolts, Nuts & Washers and Direct Tension Indicators	Accept.	Const. Fab. Insp. S 501	Proj. Engr.	1/type/ diameter/ heat	3 of each item*	CA 6	-----	10 days	Proj. Engr . to receive inspection report from Const. Fab. Insp. * Three bolts, 3 nuts,3 washers, 3 DTI are to be submitted. Copy of CA to accompany sample of ID.
	Steel Lockpins and Collars	Accept.	Const. Fab. Insp. S 501	Proj. Engr.	1/lot	1 pin and collar	CA 6	-----	10 days	
GROUT (Non-Shrink)		Accept.	Proj. Engr. S 601	Proj. Engr.	1/shipment	1 full sack, 15 lb min.	-----	-----	16 days	(AML) Sample shall be submitted in a unbroken, moisture proof sack.
PAINT AND PROTECTIV E COATINGS		**SEE SECTION 811 OF THIS MANUAL.**		Proj. Engr.						
SHEAR CONNECTO RS		Accept.	-----	Const. Fab. Insp.	-----	-----	CA 4	-----	-----	Shop and field inspection requirements per Specification Subsection 807.42.

SECTION 807 STRUCTURAL METALS (Cont'd)

MATERIAL		PURP.	SAMPLED BY / METHOD	TESTED BY	MIN. FREQ.	MIN. QUANT. / CONTAINER	CERT. / DISTR.	SMALL QUANTITY	TYPICAL HANDLING TIME	REMARKS
STEEL FORGINGS & SHAFTING		Accept.	**Inspected and stamped by the Const. Fab. Insp. Unit prior to use.**	Const. Fab. Insp.			-----	-----	-----	Proj. Engr. to receive inspection report from Const. Fab. Insp.
	Steel for Forging & Shafts	Prelim. Source Approval	-----	Const. Fab. Insp.	-----	-----	CA 6	-----	-----	-----
STRUCTURAL STEEL & ALUMINUM		Accept.	**Inspected and stamped by the Const. Fab. Insp. Unit prior to use.**	Const. Fab. Insp.			-----	-----	-----	Proj. Engr. to receive inspection report from Const. Fab. Insp.
	Metal for Fabrication	Prelim. Source Approval	Const. Fab. Insp. S 501	Const. Fab. Insp.	1/heat/grade*	Plates- 6 in. x 24 in. Shapes, bars, pipe and tubing - 24 in. length	CA 6	-----	-----	Test report to Const. Fab. Insp. only. *Sample only if questionable.
WELDING		**SEE SECTION 815 OF THIS MANUAL.**								
WRENCH	Calibrated Wrench	Accept.	-----	Proj. Engr.	*	3 assemblies/ size	-----	-----	-----	Contractor's calibration procedure to be witnessed by Proj. Engr. *See Specification Subsection 807.21(h)-(k) for frequency of calibration.
	Job Inspection Torque Wrench	Accept.	-----	Proj. Engr.	*	5 assemblies/ size	-----	-----	-----	*See Specification Subsection 807.22(h)(2) for frequency of calibration.

SECTION 808 STEEL GRID FLOORING

MATERIAL		PURP.	SAMPLED BY / METHOD	TESTED BY	MIN. FREQ.	MIN. QUANT. / CONTAINER	CERT. / DISTR.	SMALL QUANTITY	TYPICAL HANDLING TIME	REMARKS
CONCRETE (Structural)	Mix Designs, Materials & Tests	**SEE SECTION 901 OF THIS MANUAL.**								
PAINT AND PROTECTIVE COATINGS		**SEE SECTION 811 OF THIS MANUAL.**		Proj. Engr.						
STRUCTURAL STEEL	Flooring	Accept	**Inspected and stamped by the Const.**	Const. Fab. Insp.			CA 6	-----	-----	Proj. Engr. to receive inspection report from Const. Fab. Insp.
WELDING		**SEE SECTION 815 OF THIS MANUAL.**								

SECTION 809 MOVABLE BRIDGES

MATERIAL		PURP.	SAMPLED BY / METHOD	TESTED BY	MIN. FREQ.	MIN. QUANT. / CONTAINER	CERT. / DISTR.	SMALL QUANTITY	TYPICAL HANDLING TIME	REMARKS
CONCRETE (Structural)	Mix Designs, Materials & Tests	**SEE SECTION 901 OF THIS MANUAL.**								Proj. Engr. to witness test for unit weight as per Specification Subsection 809.38 for counterweights. Bridge Design must approve calculations for determining unit weight.
ELECTRICAL EQUIPMENT	Brochures, Certified Dimension Sheets & Descriptive Data		**Bridge design approves and distributes to Proj. Engr. for all**	Bridge Design			-----	-----	-----	No component shall be incorporated into the work without approval from Bridge Design.
HARDWARE	Bolts, Fasteners, Fittings, Nuts, Washers & Misc. Hardware	Accept.	Proj. Engr.* S 501	Proj. Engr.	1/size/type/ shipment	2 of each item**	-----	-----	10 days	*When sampled by Const. Fab. Insp. and listed on report to Proj. Engr., project samples are not required. **Two pieces of each size and type of hardware used are to be submitted.
MECHANICAL EQUIPMENT	Brochures, Certified Dimension Sheets & Descriptive	Accept.	**Bridge Design approves and distributes to Proj. Engr.**	Bridge Design				-----		Proj. Engr. inspects materials and components to ensure conformance.
	Parts List (Gears & Bearing in Gear Box)	Accept.		Bridge Design				-----	-----	-----

SECTION 809 MOVABLE BRIDGES (Cont'd)

MATERIAL		PURP.	SAMPLED BY / METHOD	TESTED BY	MIN. FREQ.	MIN. QUANT. / CONTAINER	CERT. / DISTR.	SMALL QUANTITY	TYPICAL HANDLING TIME	REMARKS
OPERATING HOUSE (All Furnishings)	Brochures	Accept.	**Bridge Design approves and distributes to Proj.**	Bridge Design				-----	-----	-----
PAINT AND PROTECTIVE COATINGS		**SEE SECTION 811 OF THIS MANUAL.**								
POWER PLANT		**SEE SECTION 730 OF THIS MANUAL.**								
STRUCTURAL METALS		**SEE SECTION 807 OF THIS MANUAL.**								
TRAFFIC BARRIERS	Drawings & Brochures	Accept.	**Bridge Design approves and distributes to Proj.**	Bridge Design				-----	-----	Structural Fabrication Inspect in accordance with Sections 729 & 807 of this manual.
WELDING		**SEE SECTION 815 OF THIS MANUAL.**								
WIRE ROPE & ATTACHMENTS	Counterweight Rope Assemblies	Accept.	**Inspected and stamped by Const. Fab. Insp. Unit prior to use.**	Const. Fab. Insp.			-----	-----	-----	Proj. Engr. to receive inspection report on counterweight ropes and sockets from Const. Fab. Insp.
	Counterweight Ropes	Prelim. Source Approval	Mfr. S 501	Mfr. & Const. Fab. Insp.	1/reel	2 ropes*	CA 6	-----	-----	*Two ropes per reel are to be submitted. Each rope length shall not be less than 25 times the rope diameter nor more than 12 ft.
	Sockets for Counterweight Ropes	Prelim. Source Approval	Mfr. S 501	Mfr. & Const. Fab. Insp.	1/lot	4 sockets*	CA 6	-----	-----	*Four sockets for each lot are to be submitted. Tested with the counterweight rope sample.
	Wire Rope	Accept.	Proj. Engr. S 501	Proj. Engr.	1/type or class/ shipment	6 ft length	----- **CA 6**	-----	11 days	Does not include counterweight ropes. Visual inspection by PE contact construction Fab. If questionable

SECTION 810 BRIDGE RAILINGS AND BARRIERS

MATERIAL		PURP.	SAMPLED BY / METHOD	TESTED BY	MIN. FREQ.	MIN. QUANT. / CONTAINER	CERT. / DISTR.	SMALL QUANTITY	TYPICAL HANDLING TIME	REMARKS
FOR DETAILS ON CONCRETE AND ASSOCIATED MATERIALS, SEE SECTIONS 805 AND 901 OF THIS MANUAL AND SECTION 1012 OF THE STANDARD SPECIFICATIONS.										
HARDWARE	Galvanized Steel	Accept.	Proj. Engr. S 501	Proj. Engr.	1/size/type/ shipment	2 of each item*	-----	-----	10 days	*Two pieces of each size and type of hardware used are to be submitted.
METAL CASTINGS, FITTINGS, POSTS & RAILINGS	Steel	-----	**Inspected and stamped by the Const. Fab. Unit prior to use. See Section 807 of this manual.**	Const. Fab. Insp.			CA 6	-----	-----	Proj. Engr. to receive inspection report from Const. Fab. Insp.
	Pipe (Galvanized)	Accept.	**Inspected and stamped by the Const. Fab. Unit prior to use. See Section 807 of this manual.**	Const. Fab. Insp.			CA 6	-----	-----	Proj. Engr. to receive inspection report from Const. Fab. Insp.
PAINT AND PROTECTIV E COATINGS		**SEE SECTION 811 OF THIS MANUAL.**								
WELDING		**SEE SECTION 815 OF THIS MANUAL.**								
SPECIAL SURFACE FINISH	Concrete	Accept.	Proj. Engr. S 601	Proj. Engr.	1 lot or shipment*	1 each friction top can	CC 1	-----	10 days	(AML) *Visual inspection by Proj. Engr. Sample only if questionable.

SECTION 811 PAINTING AND PROTECTIVE COATINGS

MATERIAL		PURP.	SAMPLED BY / METHOD	TESTED BY	MIN. FREQ.	MIN. QUANT. / CONTAINER	CERT. / DISTR.	SMALL QUANTITY	TYPICAL HANDLING TIME	REMARKS
THIS SECTION IS TO BE USED AS A GUIDE FOR OTHER ITEM NUMBERS WHEN REFERENCE IS MADE TO SECTION 811. THERE ARE NO PAY ITEMS UNDER SECTION 811.										
PAINT AND PROTECTIVE COATINGS	Paint for Field Painting	Prelim. Source Approval	Const. Fab Insp. S 604	Proj. Engr.	1/batch	1 pt each component*	-----	-----	14 days	(AML) *Multiple component paints must be submitted in separate containers with the mixing proportions indicated on the sample identification and cans.
		Accept.	Proj. Engr. S 604		1/batch	1 pt each component friction top can	CD* 1	10 Gal. Total Quantity/coat	14 days	*Sample when not accompanied by CD. Multiple component paints must be submitted in separate containers with the mixing proportions indicated on the sample identification and cans. Sampling technique is sensitive, contact Dist. Lab prior to sampling.
	Galvanizing Repair Compound	Accept.	Proj. Engr. S 601	Proj. Engr.	1/type*	1 bar, can or rod	-----	-----	-----	(AML) *Visual inspection by Proj. Engr. Sample only if questionable.
	Paint for Shop Painting	Prelim. Source Approval	Const. Fab Insp. S 604	Proj. Engr.	1/batch	1 pt each component	-----	-----	14 days	(AML) Multiple component paints must be submitted in separate containers with the mixing proportions indicated on the sample identification and cans.
		Accept.	Const. Fab Insp. S 604		1/batch	1 pt each component friction top can	CD*/CC** 6	-----	14 days	(AML) *Sample when not accompanied by CD. Multiple component paints must be submitted in separate containers with the mixing proportions indicated on the sample identification and cans. Contractor to notify Bridge Design Engineer and Consultant Engineer of the paint system to be used prior to submitting shop drawings. **For inorganic zinc primers, stating Class B slip coefficient is met.

SECTION 812 TREATED TIMBER

MATERIAL		PURP.	SAMPLED BY / METHOD	TESTED BY	MIN. FREQ.	MIN. QUANT. / CONTAINER	CERT. / DISTR.	SMALL QUANTITY	TYPICAL HANDLING TIME	REMARKS
CONNECTORS		Accept.	Proj. Engr. S 501	Proj. Engr.	1/type/ shipment*	1 of each item**	-----	-----	10 days	*Visual inspection by Proj. Engr. Sample only if questionable. **One of each type of connector used is to be submitted.
CASTINGS		Accept.	Proj. Engr. S 501	Proj. Engr.	1/type/ shipment	1 of each item*	-----	-----	10 days	*One of each type of casting used is to be submitted.
HARDWARE & STRUCTURA		Accept.	Proj. Engr. S 501	Proj. Engr.	1/type/ shipment	1 of each item*	CA 3	-----	10 days	*One piece of each type and size of item used is to be submitted.
PAINT AND PROTECTIVE COATINGS		**SEE SECTION 811 OF**								

SECTION 812 TREATED TIMBER (Cont'd)

MATERIAL		PURP.	SAMPLED BY / METHOD	TESTED BY	MIN. FREQ.	MIN. QUANT. / CONTAINER	CERT. / DISTR.	SMALL QUANTITY	TYPICAL HANDLING TIME	REMARKS
ROOFING PITCH		Accept.	-----	Proj. Engr.	-----	-----	-----	-----	-----	Visual inspection by Proj. Engr.
TIMBER & LUMBER (Treated)		Accept.	**Inspected and stamped (Hammered) by Const. Fab. Insp. Unit prior to use.**	Const. Fab. Ins./ Proj. Engr.			CD 1 & 6	-----	-----	Visual inspection by Proj. Engr.
	CCA & Petachlorophenol Treated, Creosote & Creosote solution Treated	Prelim. Source Approval	Const. Fab. Insp. AWPA	Const. Fab. Insp./MFG	1/charge	20 borings plastic bottle	CC 6	-----	14 days	(One) 1 sample consist of 20 borings.
	Preservatives	Accept.	Const. Fab. Insp. S 601	Proj. Engr.	1/tank*	1 qt friction top can	CA 6	**-----**	14 days	*Visual inspection by Const. Fab. Insp. Sample only if questionable.
Timber & Lumber (Treated)	Untreated Timber	Prelim. Source Approval	Const. Fab. Insp. S 601	Const. Fab. Insp.	-----	-----	-----	-----	-----	Visual inspection by Const. Fab. Insp. for soundness, dimensions and infestation.
TREATMENT OF PILE HEADS	Canvas	Accept.	Proj. Engr. S 601	Proj. Engr.	1/shipment*	18 in x 18 in.	-----	-----	10 days	*Visual inspection by Proj. Engr. Sample only if questionable.
	Coal Tar Pitch, Creosote Oil, Asphalt & Copper	Accept.	Proj. Engr. S 201	Proj. Engr.	1/shipment*	1 qt friction top can	-----	-----	10 days	*Visual inspection by Proj. Engr. Sample only if questionable.
	Fabric Covering	Accept.	Proj. Engr. S 601	Proj. Engr.	1/shipment*	18 in. x 18 in.	-----	-----	10 days	*Visual inspection by Proj. Engr. Sample only if questionable.
	Galvanized Metal Covering	Accept.	Proj. Engr. S 501	Proj. Engr.	1/shipment*	6 in. x 6 in.	-----	-----	10 days	*Visual inspection by Proj. Engr. Sample only if questionable.
	Galvanized Nails, Staples & Wire	Accept.	Proj. Engr. S 501	Proj. Engr.	1/size/type/ shipment*	12 of each item** Wire - 24 in. length	-----	-----	10 days	*Visual inspection by Proj. Engr. Sample only if questionable. **Twelve nails and 12 staples are to be submitted.

SECTION 813 CONCRETE APPROACH SLABS

MATERIAL		PURP.	SAMPLED BY / METHOD	TESTED BY	MIN. FREQ.	MIN. QUANT. / CONTAINER	CERT. / DISTR.	SMALL QUANTITY	TYPICAL HANDLING TIME	REMARKS
FOR DETAILS ON CONCRETE TESTS, MIX DESIGNS AND MATERIALS (ADMIXTURES, AGGREGATES, CEMENT AND WATER) SEE SECTION 901 OF THIS MANUAL.										
AGGREGATE	Bedding Material	Accept.	Proj. Engr. S 101	Proj. Engr.	1/1,000 yd^3	1 full sample sack	-----	-----	4 days	-----
BEARING PIL	Timber	Accept.	**Inspected and stamped by the const. fab. Insp. Unit prior to use. See section 812 of this manual.**				CD 1 & 6	-----	-----	Visual inspection by Proj. Engr.
CONCRETE (In-Place)	Compressive Strength	*	Proj. Engr. S 301	Proj. Engr.	1/pour	Three cylinder mold	-----	-----	-----	*To determine strength for form removal or exposure to construction traffic.
CURING MATERIALS		**SEE SECTION 601 OF THIS MANUAL.**		Proj. Engr.						
GEOCOMPOSITE DRAINAGE	Wall Drain	Accept.	Proj. Engr. S 601	Proj. Engr.	1/lot or shipment	4ft^2	CA 5	-----	10 days	(AML)
GEOTEXTILE FABRIC		Accept.	Proj. Engr. S 601	Proj. Engr.	1/type	3 lin ft/roll width of fabric*	CC 1	150 yd^2	10 days	(AML) *Sample a minimum of 18 ft2.
HARDWARE CLOTH		Accept.	Proj. Engr. S 601	Proj. Engr.	1/shipment*	18 in x 18 in.	-----	-----	10 days	*Visual inspection by Proj. Engr. Sample only if questionable.
JOINT MATERIAL	Preformed Closed Cell Polyethylene	Accept.	Proj. Engr. S 601	Proj. Engr.	1/5,000 lin ft/ Width	36 in. length	-----	-----		(AML)
JOINT SEAL (Preformed)	Elastomeric Compression	Accept.	Proj. Engr. S 601	Proj. Engr.	1/lot or shipment	8 ft length*	CA** 1	-----	14 days	(AML) *When width is over 2 in., 4 ft length is sufficient. **Proj. Engr. forwards CA with sample to Mat. Lab.
ADHESIVE LUBRICANT-	For Preformed Closed Cell polyethylene Joint Filler	Accept.	-----		-----	-----	-----	-----	10 days	(AML) Visual inspection by Proj. Engr.
	For Preformed Elastomeric Compression Joint Seal	Accept.	Proj. Engr. S 601	Proj. Engr.	1 Project/lot	1qt friction top can	-----	-----	10 days	(AML) Mix well before sampling. Seal can tightly.
POLYETHYLENE FILM		Accept.	Proj. Engr. S 601	Proj. Engr.	1/lot or shipment*	36 in. length	-----	-----	10 days	*Visual inspection by Proj. Engr. Sample only if questionable.
REINFORCING STEEL		Accept.	Proj. Engr. S 501	Proj. Engr.	1/size/ source*	48 in. length	CA 1	-----	10 days	(AML) *material with a CA need not be sampled for acceptance. Sample if questionable.
UNDERDRAIN PIPE		**SEE SECTION 703 OF THIS MANUAL.**								

SECTION 814 DRILLED SHAFT FOUNDATIONS

MATERIAL		PURP.	SAMPLED BY / METHOD	TESTED BY	MIN. FREQ.	MIN. QUANT. / CONTAINER	CERT. / DISTR.	SMALL QUANTITY	TYPICAL HANDLING TIME	REMARKS
CONCRETE (Structural)	Mix Designs, Materials & Test	**SEE SECTION 901 OF THIS MANUAL.**								
GRANULAR MATERIAL	Pea Gravel or Granular Material	Accept.	-----		-----	-----	-----	-----	-----	Visual inspection by Proj. Engr.
REINFORCEMENT		Accept.	Proj. Engr. S 501	Proj. Engr.	1/size/ source*	48 in. length	CA 1	-----	10 days	(AML) *material with a CA need not be sampled for acceptance. Sample if questionable.
SLURRY		Quality Control	Contractor API 13B	Contractor	as needed	-----	-----	-----	-----	-----
		Accept.	Proj. Engr.*	Proj. Engr.	-----	-----	-----	-----	-----	*Contractor tests to be observed by the Proj. Engr. & documented.

SECTION 815 WELDING

MATERIAL		PURP.	SAMPLED BY / METHOD	TESTED BY	MIN. FREQ.	MIN. QUANT. / CONTAINER	CERT. / DISTR.	SMALL QUANTITY	TYPICAL HANDLING TIME	REMARKS
THIS SECTION IS TO BE USED AS A GUIDE FOR OTHER ITEM NUMBERS WHEN REFERENCE IS MADE TO SECTION 815. THERE ARE NO PAY ITEMS UNDER SECTION 815.										
WELDING QUALIFICATION AND TESTING	Field	Accept.	**Welders and procedure qualified by licensed, bonded testing laboratory. Procedure and welder qualification are received and reviewed by construction fabrication.**	Proj. Engr.			-----	-----	-----	-----
	Shop	Accept.		80 Const. Fab. Ins.			-----	-----	-----	

SECTION 901 PORTLAND CEMENT CONCRETE

MATERIAL		PURP.	SAMPLED BY / METHOD	TESTED BY	MIN. FREQ.	MIN. QUANT. / CONTAINER	CERT. / DISTR.	SMALL QUANTITY	TYPICAL HANDLING TIME	REMARKS
THIS SECTION IS TO BE USED AS A GUIDE FOR OTHER ITEM NUMBERS WHEN REFERENCE IS MADE TO SECTION 901 OF THIS MANUAL. THERE ARE NO PAY ITEMS UNDER SECTION 901.										
ADMIXTURES		Accept.	Proj. Engr. S 601	Proj. Engr.	1/type/ project	1 pt friction top can	CC 1	-----	-----	(AML) Visual inspection. Sample only if questionable.
		Verif.	Proj. Engr. S 601	Proj. Engr.	1/type/ project	1 pt friction top can	-----	300 yd^3	9 days	(AML)
AGGREGATES (Pavement)	Fine & Coarse	Quality Control	Contractor S 101	Contractor	1/day/plant for moisture 2/day/plant for gradation	1 full sample sack	-----	-----	-----	(AML) Gradation results are plotted on control charts which are required for documentation. See "Application of Quality Assurance Specifications for Portland Cement Concrete Pavement and structures" for details.
		Accept.	Proj. Engr. S 101	Proj. Engr.	1/pavement lot*	1 full sample sack	-----	50 yd^3	3 days	(AML) Check gradation and foreign matter. *For paving concrete produced from non-dedicated stockpiles.
		Verif.	Proj. Engr. S 101	Proj. Engr.	1/1,000 yd^3/ dedicated stockpile	1 full sample sack	-----	-----	3 days	(AML) Sample as stockpile is being built.
	Blended Aggregate Type B & D	Quality Control	Contractor S 101	Contractor	1/stockpile/ day	1 full sample sack	-----	50 yd^3	3 days	(AML) Gradations for each component used to calculate blended gradation based on mix proportions. Report combined gradation of adjacent sieves as required by specifications.
		Verif.	Proj. Engr. S 101	Proj. Engr.	1/aggregate size/lot (max of 1/agg. size/day)	1 full sample sack	-----	50 yd^3	3 days	(AML) Verification testing performed by Dist Lab in accordance with **901.6.4**
AGGREGATES (Structural and Minor Structural)	Fine & Coarse	Quality Control	Contractor S 101	Contractor	1/lot	1 full sample sack	-----	-----	-----	(AML) Gradation and moisture content to be run. Lot to be identifiable pour up to 200 yd3 max of concrete. Gradation results shall be plotted on control charts which are required for documentation. See "Application of Quality Assurance Specifications for Portland Cement Concrete Pavement and Structures" for details.
		Accept.	Proj. Engr. S 101	Proj. Engr.	1/every 5 day of production or 400 **yd^3** of aggregate*	1 full sample sack	-----	50 yd^3	3 days	(AML) Check gradation and foreign matter. *For structural concrete produced from non-dedicated stockpiles.
		verif.	Proj. Engr. S 101	Proj. Engr.	1/1,000 yd^3/ dedicated stockpile	1 full sample sack	-----	50 yd^3	3 days	(AML) Sample as stockpile is being built.

SECTION 901 PORTLAND CEMENT CONCRETE (Cont'd)

MATERIAL		PURP.	SAMPLED BY / METHOD	TESTED BY	MIN. FREQ.	MIN. QUANT. / CONTAINER	CERT. / DISTR.	SMALL QUANTITY	TYPICAL HANDLING TIME	REMARKS
CEMENT (Hydraulic)	**Types I, II, IL, IP & IS (Structural) Types I, II, III (HES), IL, IP & IS (Pavement) Types I, II, III, IL, IP & IS (Precast & Prestress)**	Prelim Source Approval	Mfr. **AASHTO** T 127	Proj. Engr.	1/month	Five - 1 gal friction top cans or acceptable moisture proof container	-----	-----	5 weeks	(AML) Composited and blended from daily plant samples.
		Accept.	-----	Proj. Engr.	1/shipment	-----	CC 1 & 7	50 yd^3	17 days	(AML)
		Verif.	Proj. Engr. S 102	Proj. Engr.	1/600 tons/source*	1 gal friction top can	CC** 1 & 7	300 yd^3	17 days	(AML) *Maximum of one sample per day per source unless questionable. **Copy of CC shall be submitted with sample.
CONCRETE (Minor Structure)	Compressive Strength	Accept.	Proj. Engr. S 301 TR 226	Proj. Engr.	3cyl/50yd^3	6 in. x 12 in. cylinder mold	-----	50 yd^3	30 days	-----
	Mix Design	Design/ Accept.	*	Contractor/ Proj. Engr.	1/mix class or type/material source/plant	-----	-----	-----	3 days	(AML - Admixtures, AML- Aggregates, AML - Cement, AML Fly Ash and AML Microsilica (Silica Fumes)) *The contractor shall submit to the Dist. Lab Engr. the standard Mix Design form indicating the intended source of all materials and the mix design. Acceptance by the Dist. Lab Engineer is required prior to starting work.
	Slump and Air	Accept.	Proj. Engr. S 301	Proj. Engr.	1/50 yd^3	0.5 ft^3	-----	50 yd^3	1 day	When required in Table 1 or individual section.
CONCRETE (Pavement)	Entrained Air	Quality Control	Contractor S 301	Contractor	2/half day	0.25 ft^3	-----	-----	-----	Air test results shall be plotted on control charts which are required for documentation.
		Accept.	Proj. Engr. S 301	Proj. Engr.	1/half day	0.25 ft^3	-----	-----	1 day	-----
	Mix Design	Design/ Accept.	*	Contractor/ Proj. Engr.	1/mix type/material source/plant	-----	-----	-----	3 days	*Contractor shall submit to the Dist. Lab Engr. the standard Mix Design form indicating material sources, proportions, and composite gradation calculations. Acceptance by the Dist. Lab Engr. is required prior to starting work.
	Mix Temperature	Quality Control	Contractor S 301	Contractor	*	-----	-----	-----	-----	*When temperature control is needed, testing must be sufficient to prevent exceeding appropriate limits.
	Slump	Quality Control	Contractor S 301	Contractor	2/half day	0.5 ft^3	-----	-----	-----	Slump test results shall be plotted on control charts which are required for documentation.
		Accept.	Proj. Engr. S 301	Proj. Engr.	1/half day	0.5 ft^3	-----	-----	1 day	-----
	Unit Weight	Quality Control	Contractor S 301	Contractor	*	1.5ft^3 0.5 or 1 ft^3 yield bucket	-----	-----	-----	*Unit weight will be run as necessary.

SECTION 901 PORTLAND CEMENT CONCRETE (Cont'd)

MATERIAL		PURP.	SAMPLED BY / METHOD	TESTED BY	MIN. FREQ.	MIN. QUANT. / CONTAINER	CERT. / DISTR.	SMALL QUANTITY	TYPICAL HANDLING TIME	REMARKS
CONCRETE (Structural)	Entrained Air	Quality Control	Contractor S 301	Contractor	2/lot	0.25 ft^3	-----	-----	-----	Air test results shall be plotted on control charts which are required for documentation.
		Accept.	Proj. Engr. S 301	Proj. Engr.	1/lot	0.25 ft^3	-----	-----	1 day	When pump placement is used, see "Application of Quality Assurance Specifications for Portland Cement Concrete Pavement and Structures" for details.
	Compressive Strength & Surface Resistivity	Accept.	Proj. Engr. S 301 TR 226 & TR 233	Proj. Engr.	3 cyl/batch 2 batches/lot	cylinder molds	-----	-----	30 days	A lot is an identifiable pour not to exceed 200 yd^3. For specific details see Specification Subsection **805.10**.
	Mix Design	Design/ Accept.	*	Contractor/ Proj. Engr.	1/mix class/material source/plant	-----	-----	-----	3 days	*Contractor shall submit to the Dist. Lab Engr. the standard Mix Design form indicating the intended source of all materials and the mix design. Acceptance by the Dist. Lab Engineer is required prior to starting work.
	Mix Temperature	Quality Control	Contractor S 301	Contractor	*	-----	-----	-----	-----	*When temperature control is required, testing must be sufficient to prevent exceeding appropriate limits.
	Slump	Quality Control	Contractor S 301	Contractor	2/lot	0.5 ft^3	-----	-----	-----	Slump test results shall be plotted on control charts which are required for documentation.
		Accept.	Proj. Engr. S 301	~~Table 901-3~~ Proj. Engr.	1/lot	0.5 ft^3	-----	-----	1 day	When pump placement **is** used, see "Application of Quality Assurance Specifications for Portland Cement Concrete Pavement and Structures" for details.
	Unit Weight	Quality Control	Contractor S 301	Contractor	*	1.5 ft^3 0.5 or 1 ft^3 yield bucket	-----	-----	-----	*Unit weight will be run as necessary.

SECTION 901 PORTLAND CEMENT CONCRETE (Cont'd)

MATERIAL		PURP.	SAMPLED BY / METHOD	TESTED BY	MIN. FREQ.	MIN. QUANT. / CONTAINER	CERT. / DISTR.	SMALL QUANTITY	TYPICAL HANDLING TIME	REMARKS
FLY ASH	Cement Replacement	Prelim. Source Approval	Mfr. S 102	Proj. Engr.	1/month	Five - 1 gal friction top cans or acceptable moisture proof containers	-----	-----	10 weeks	(AML)
		Accept.	-----	Proj. Engr.	1/shipment	-----	CC 1 & 7	50 yd^3	-----	(AML)
		Verif.	Proj. Engr. S 102	Proj. Engr.	1/200 tons/source	1 gal friction top can	CC* 1 & 7	50 yd^3	17 days	(AML) *Copy of CC shall be submitted with sample
GROUND GRANULATED BLAST-FURNACE SLAG	Cement Replacement	Prelim. Source Approval	Mfr. S 102	Proj. Engr.	1/month	Five - 1 gal friction top cans	CC 1 & 7	-----	17 days	(AML)
		Accept.	-----	Proj. Engr.	1/shipment	-----	CC 1 & 7	50 yd^3	-----	(AML)
		Verif.	Proj. Engr. S 102	Proj. Engr.	1/200 tons/source	1 gal friction top can	CC* 1 & 7	300 yd^3	17 days	(AML) *Copy of CC shall be submitted with sample.
WATER		Accept.	Proj. Engr. S 301	Proj. Engr.	1/source	1 qt plastic bottle	-----	50 yd^3	11 days	Potable water need not be sampled.