Finish Schedule

Level	Room Number	Room Name	Finish: Floor	Finish: Base	Finish: Wall	Finish: Ceiling	Comments
Level 1							
Level 1	01	Secure Vest.	CT01	WB01	PT01, WC01	PT05	EXISTING BEADBOARD CEILING TO REMAIN
Level 1	03	Corridor	RF02	RB01	PT01	PT05	EXISTING BEADBOARD CEILING TO REMAIN
Level 1	04	Staff Work/ Break	RF02	RB01	PT01, PT02	ACT01	
Level 1	05	Office 1	CPT01	RB01	PT01	ACT01	
Level 1	06	Office 2	CPT01	RB01	PT01	ACT01	
Level 1	07	Iso/ Therapy	CPT01	RB01	PT01	ACT01	
Level 1	08	Circ	RF02	RB01	PT01, PT02	PT05	EXISTING BEADBOARD CEILING TO REMAIN
Level 1	09	Mech	SC01	RB01	PT01	-	
Level 1	10a	Electrical	SC01	RB01	PT01	-	
Level 1	10b	IT	SC01	RB01	PT01	-	
Level 1	11	Infant Classroom	RF01, RF03	RB01	PT01, PT02, WC01	PT04	EXISTING BEADBOARD CEILING TO REMAIN
Level 1	12	Infant Classroom	RF01, RF03	RB01	PT01, PT02, WC01	PT04	EXISTING BEADBOARD CEILING TO REMAIN
Level 1	13	1T Classroom	RF01, RF03	RB01	PT01, PT02, WC01	PT04	EXISTING BEADBOARD CEILING TO REMAIN
Level 1	14	2T Classroom	RF01, RF03	RB01	PT01, PT02, WC01	PT04	EXISTING BEADBOARD CEILING TO REMAIN
Level 1	15	2T Classroom	RF01, RF03	RB01	PT01, PT02, WC01	PT04	EXISTING BEADBOARD CEILING TO REMAIN
Level 1	16	Storage	SC01	RB01	PT	EXP01	EXISTING BEADBOARD CEILING TO REMAIN
Level 1	17	Cafeteria/ Indoor Play	RF01	RB01	PT	PT05	EXISTING GYPSUM BOARD CEILING TO REMAIN
Level 1	18	1T Classroom	RF01, RF03	RB01	PT	PT04	EXISTING GYPSUM BOARD CEILING TO REMAIN
Level 1	18A	Storage	SC01	RB01	PT01	ACT01	
Level 1	18B	Existing Restroom	-	-	-	-	NO WORK/ EXISTING TO REMAIN
Level 1	18C	Existing Restroom	-	-	-	-	NO WORK/ EXISTING TO REMAIN
Level 1	18E	Outdoor Play	TURF	NA	NA	NA	
Level 1	19	Child RR	CT01	CTB01	CWT01/CWT02 / PT01	PT05	CERAMIC WALL TILE UP TO 7'-0" AFF, PAINTED GYP ABOVE
Level 1	20	Child RR	CT01	CTB01	CWT01/CWT02 / PT01	PT05	CERAMIC WALL TILE UP TO 7'-0" AFF, PAINTED GYP ABOVE
Level 1	21	Janitor	SC01	RB01	FRP/ PT01	PT01	FRP AT MOP SINK UP TO 7'-0" AFF, PAINTED GYP ABOVE
Level 1	22	Meal Prep	RF01	RB01	WC01, PT03	WC01	

Finish Legend - Interiors

Mark	Red List Free	Manufacturer	Model	Comments	Latest Revision
033000 CAST-IN-PLACE CONCRETE					
SC01		EXPOSED CAST IN PLACE CONCRETE		EXISTING CAST IN PLACE CONCRETE WITH CURE & SEALING COMPOUND	
064023 INTERIOR ARCHITECTURAL WOODWORK					
MEL01			WHITE MELAMINE		
WDV01			WOOD VENEER	WALNUT, STAIN TO MATCH PL01	
064100 PLASTIC LAMINATE					
PL01		WILSONART	NEO WALNUT -7991-38, FINE VELTVET FINISH		
088000 GLAZING					
GL01			1/4" CLEAR (Tempered)		
IGU01			1" INSULATED GLASS (Clear)		
093013 CERAMIC TILING					
CT01		HORIZON ITALIAN TILE	HIT 120, RUN, ROAD	6 X 12, UNPOLISHED, COVE BASE GROUT: TBD MAPEI	
CWT01		IMOLA	SLASH, 5V	4 X 12, BULLNOSE BASE, GROUT: TBD MAPEI	
CWT02		DALTILE	WHITE SUBWAY	4 X 12, GROUT: TBD	
095113 ACOUSTICAL PANEL CEILINGS					
ACT01		USG	MARS CLIMA PLUS HIGH NRC	COLOR: WHITE, SIZE: 24" X 24" x 1", EDGE: SLT	
096500 RESILIENT FLOORING AND ACCESSORIES					
RB-01		ROPPE	PINNACLE RUBBER BASE	4" COVE BASE, MATCH WALL FINISH COLOR	
096500 RESILIENT SHEET FLOORING					
RF01		NORA FLOORING	LINEE, BLUESTONE, 7308		
RF02		NORA FLOORING	LINEE, GRAVEL, 7310		
RF03		NORA FLOORING	ENVIRONCARE, FARMERS MARKET, 7061		
096813 TILE CARPET					
CPT01	Yes	MOHAWK	LEARN & LIVE	COLOR: RISE UP, 655 NORTHVIEW, SIZE: 24" X 24"	
099123 INTERIOR PAINTING					
PT01		BENJAMIN MOORE	OATMEAL, 268		
PT02		BENJAMIN MOORE	FRASER FIR, 503		
PT03		BENJAMIN MOORE	CHOPPED DILL, 496		
SS01		CORIAN	ARTISTA BEIGE		
099500 WALL COVERINGS					
WC01		DESIGNTEX	DW11 PVC FREE WALLCOVERING	CUSTOM PRINT DESIGN	
123661 SIMULATED STONE COUNTERTOPS					
SS01		CORIAN	COTTAGE LANE		

General Notes (Finishes):

1. ALL FINISH MATERIALS MUST MEET THE FLAME SPREAD RATINGS PER THE BUILDING CODE.
2. REFER TO INTERIOR ELEVATIONS FOR SPECIFIC MATERIAL LOCATIONS.
3. REFER INCID FLOOR/WALL/CEILING TYPES ARE FOR TOP FINISH LAYER DETAILS ONLY. REFER TO ARCHITECTURAL AND STRUCTURAL DRAWINGS FUR O FLOOR/WALL CEILING ASSEMBLY DETAILS PER LOCATION.
4. PAINT ALL EXPOSED DUCTWORK, CONDUIT, ELECTRICAL EQUIPMENT, ETC TO MATCH ADJACENT SURFACES.
5. PAINT ALL NON-FACTORY FINISHED EXPOSED METAL.
6. REFER TO TYPICAL FLOORING TRANSITION DETAILS FOR ALL FLOORING MATERIALS.
7. FLOORING TRANSITIONS AT DOORS SHOULD BE LOCATED UNDER THE DOOR IN THE CLOSED POSITION, UNLESS NOTED OTHERWISE.
8. CONTRACTOR WILL BE RESPONSIBLE FOR PROTECTING FINISHED FLOORING SURFACES FROM DAMAGE DURING ALL CONSTRUCTION PHASES.
9. PROVIDE BULLNOSE TRIM AT TRANSITIONS FROM CERAMIC WALL TILE TO OTHER MATERIAL UNLESS NOTED OTHERWISE.
10. REFER TO REFLECTED CEILING PLANS FOR CEILING HEIGHTS.
11. ALL ELECTRICAL DEVICE COVERS ARE TO BE WHITE UNLESS NOTED OTHERWISE.
12. CARPET PATTERNS TO RUN PARALLEL TO CORRIDOR, UNLESS NOTED OTHERWISE.
13. ALL HOLLOW METAL DOOR FRAMES TO BE PAINTED TO MATCH ADJACENT WALL COLOR.

Floor Plan - Level 1 Finish A3

3/32" = 1'-0"

multistudio

Early Learning Center Lemann Building T.I.

318 Mississippi Street
Donaldsonville, LA 70346

Project Number: 1322-0060

owner:
Parish of Ascension
615 E Worthey Street
Gonzales, LA 70737
225.450.1200

architect:
Multistudio
3308A Magazine Street
New Orleans, LA 70115
504.881.6303
multistudio

mep engineer:
Lucien T Vivian Jr & Assoc
3001 22rd Street
Metairie, LA 70002
504.218.5409
vivianengineers.com

Issue Date: 10/14/22

Revisions

NUMBER	DESCRIPTION	DATE

UNLESS A PROFESSIONAL SEAL WITH SIGNATURE AND DATE IS APPLIED, THIS DOCUMENT IS PRELIMINARY AND IS NOT INTENDED FOR CONSTRUCTION, RECORDING PURPOSES OR IMPLEMENTATION

Finish Plan - Level 1

AF101

Construction Documents

General Notes (Signage):

1. THE ENVIRONMENTAL GRAPHICS PACKAGE CONSISTS OF THE FOLLOWING COMPONENTS: DETAIL DRAWINGS, SIGN LOCATION PLANS, SIGNAGE MESSAGE SCHEDULE, AND SPECIFICATION MANUAL.
2. ALL SIGNS TO BE FABRICATED AND INSTALLED TO COMPLY WITH LOCAL BUILDING CODES, ADAAG, AND ANSI 117.1
3. FABRICATOR TO REVIEW THE STRUCTURAL, MECHANICAL, AND ARCHITECTURAL DRAWINGS AND SITE CONDITIONS TO VERIFY SIZES AND LOCATION OF SIGNAGE RELATED ELEMENTS THAT EXIST. ANY DISCREPANCIES AND/OR CONFLICTS SHALL BE REPORTED TO THE OWNER/ARCHITECT/GENERAL CONTRACTOR IN WRITING BEFORE PROCEEDING WITH FABRICATION OR ORDERING MATERIALS.
4. FABRICATOR SHALL SUBMIT FULLY DETAILED WORKING (SHOP/FABRICATION) DRAWINGS TO ARCHITECT/GENERAL CONTRACTOR FOR ALL SIGNS AND GRAPHICS CONTAINED IN THIS PACKAGE. DRAWINGS SHALL BE REVIEWED AND HAVE SIGNED APPROVAL PRIOR TO FABRICATION OR ORDERING OF MATERIALS.
5. ALL SIGNS ARE TO BE FABRICATED FROM MATERIALS SPECIFIED UNLESS OTHERWISE APPROVED IN WRITING BY THE OWNER/ARCHITECT. NO EXCEPTIONS.
6. DRAWINGS CONTAINED IN THIS PACKAGE ARE FOR AESTHETIC AND FUNCTIONAL DESIGN INTENT ONLY. NO INSTRUCTIONS FOR STRUCTURAL APPROPRIATENESS HAVE BEEN MADE. IT IS THE RESPONSIBILITY OF THE SIGNAGE FABRICATOR TO ENSURE THAT ALL ELEMENTS ARE FABRICATED FOR A STABLE AND DURABLE INSTALLATION WHILE ADHERING TO THE AESTHETIC DETAILS INDICATED.
7. FABRICATOR IS RESPONSIBLE FOR DETERMINING PROPER MOUNTING METHODS FOR SIGNS UNLESS OTHERWISE SPECIFIED. ALL MOUNTING MATERIALS/TECHNIQUES TO BE APPROVED IN WRITING AND HAVE SIGNED APPROVAL PRIOR TO INSTALLATION.
8. ALL FASTENERS ARE TO BE CONCEALED UNLESS NOTED OTHERWISE.
9. FABRICATOR TO COORDINATE THE INSTALLATION OF SITE SIGNAGE AND ASSOCIATED FOOTINGS WITH THE GENERAL CONTRACTOR'S INSTALLATION OF THE SURROUNDING HARDSCAPE.
10. ALL TEXT SHOWN IN DETAIL DRAWINGS IS FOR REFERENCE ONLY. REFER TO SIGNAGE MESSAGE SCHEDULE FOR EXACT TEXT ON EACH SIGN.
11. ALL ROOM IDENTIFICATIONS SIGNS ARE TO BE MOUNTED 9 INCHES FROM THE CENTER OF THE SIGN TO THE LATCH SIDE OF DOOR FRAME.

Signage Legend

Type Mark	Type Comments	Count
A	Room ID (Basic)	10
C	Room ID (Basic) (No Room Number)	10
R3	Restroom - Unisex	2

Signage Notes

Note	Description
1A	Aluminum backed photopolymer 1/16" thick attached to 1/8" thick clear acrylic. Finish: Brushed Aluminum
2A	Aluminum backed photopolymer 1/16" thick attached to 1/8" thick black acrylic backer. Finish: Matte Black
3B	Tactile Lettering integral to photopolymer base 5/8" Tall, 3/32" Thick, Font: DIN Medium, Finish: Matte Black
4A	Tactile Lettering integral to photopolymer base 1/2" Tall, 3/32" Thick, Font: DIN Medium, Finish: Matte White
5	Binary Pattern screen printed onto laminate Color: PMS Cool Gray 11U.
6	3/32" Grade 2 Braille integral aluminum photopolymer

Restroom - Unisex R3

6" = 1'-0"

Room ID (Basic) C

6" = 1'-0"

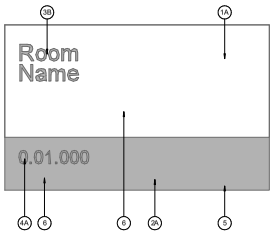

Room ID (Standard) A

6" = 1'-0"

Typical Signage Mounting Heights A3

1/2" = 1'-0"

multistudio

Early Learning Center
Lemann Building T.I.

318 Mississippi Street
Donaldsonville, LA 70346

Project Number: 1322-0060

owner:
Parish of Ascension
615 E Worthey Street
Gonzales, LA 70737
225.450.1200

architect:
Multistudio
3308A Magazine Street
New Orleans, LA 70115
504.681.6303
multistudio

mep engineer:
Lucien T Vivien Jr & Assoc
3001 22nd Street
Metairie, LA 70002
504.218.5409
vivienengineers.com

Issue Date: 10/14/22

Revisions

NUMBER	DESCRIPTION	DATE

UNLESS A PROFESSIONAL SEAL WITH SIGNATURE AND DATE IS APPLIED, THIS DOCUMENT IS PRELIMINARY AND IS NOT INTENDED FOR CONSTRUCTION, RECORDING PURPOSES OR IMPLEMENTATION

Signage Types, Schedule & Details

SG001

Construction Documents

Signage Schedule

Room: Number	Room: Name	Room: Signage Text	Type Mark	Type Comments	Comments
Level 1					
03	Corridor		C	Room ID (Basic) (No Room Number)	DNS
04	Staff Work/ Break		A	Room ID (Basic)	DNS
04	Staff Work/ Break		C	Room ID (Basic) (No Room Number)	DNS
05	Office 1		A	Room ID (Basic)	DNS
05	Office 1		C	Room ID (Basic) (No Room Number)	DNS
06	Office 2		A	Room ID (Basic)	DNS
07	Iso/ Therapy		A	Room ID (Basic)	DNS
09	Mech		C	Room ID (Basic) (No Room Number)	DNS
10b	IT		C	Room ID (Basic) (No Room Number)	DNS
10b	IT		C	Room ID (Basic) (No Room Number)	DNS
11	Infant Classroom		A	Room ID (Basic)	DNS
12	Infant Classroom		A	Room ID (Basic)	DNS
13	1T Classroom		A	Room ID (Basic)	DNS
14	2T Classroom		A	Room ID (Basic)	DNS
15	2T Classroom		A	Room ID (Basic)	DNS
16	Storage		C	Room ID (Basic) (No Room Number)	DNS
16	Storage		C	Room ID (Basic) (No Room Number)	DNS
18	1T Classroom		A	Room ID (Basic)	DNS
19	Child RR		R3	Restroom - Unisex	DNS
20	Child RR		R3	Restroom - Unisex	DNS
21	Janitor		C	Room ID (Basic) (No Room Number)	DNS
22	Meal Prep		C	Room ID (Basic) (No Room Number)	DNS

General Notes (Signage):

1. THE ENVIRONMENTAL GRAPHICS PACKAGE CONSISTS OF THE FOLLOWING COMPONENTS: DETAIL DRAWINGS, SIGN LOCATION PLANS, SIGNAGE MESSAGE SCHEDULE, AND SPECIFICATION MANUAL.
2. ALL SIGNS TO BE FABRICATED AND INSTALLED TO COMPLY WITH LOCAL BUILDING CODES, ADA&G, AND ANSI 117.1
3. FABRICATOR TO REVIEW THE STRUCTURAL, MECHANICAL, AND ARCHITECTURAL DRAWINGS AND SITE CONDITIONS TO VERIFY SIZES AND LOCATION OF SIGNAGE RELATED ELEMENTS THAT EXIST. ANY DISCREPANCIES AND/OR CONFLICTS SHALL BE REPORTED TO THE OWNER/ARCHITECT/GENERAL CONTRACTOR IN WRITING BEFORE PROCEEDING WITH FABRICATION OR ORDERING MATERIALS.
4. FABRICATOR SHALL SUBMIT FULLY DETAILED WORKING (SHOP/FABRICATION) DRAWINGS TO ARCHITECT/GENERAL CONTRACTOR FOR ALL SIGNS AND GRAPHICS CONTAINED IN THIS PACKAGE. DRAWINGS SHALL BE REVIEWED AND HAVE SIGNED APPROVAL PRIOR TO FABRICATION OR ORDERING OF MATERIALS.
5. ALL SIGNS ARE TO BE FABRICATED FROM MATERIALS SPECIFIED UNLESS OTHERWISE APPROVED IN WRITING BY THE OWNER/ARCHITECT. NO EXCEPTIONS.
6. DRAWINGS CONTAINED IN THIS PACKAGE ARE FOR AESTHETIC AND FUNCTIONAL DESIGN INTENT ONLY. NO INSTRUCTIONS FOR STRUCTURAL APPROPRIATENESS HAVE BEEN MADE. IT IS THE RESPONSIBILITY OF THE SIGNAGE FABRICATOR TO ENSURE THAT ALL ELEMENTS ARE FABRICATED FOR A STABLE AND DURABLE INSTALLATION WHILE ADHERING TO THE AESTHETIC DETAILS INDICATED.
7. FABRICATOR IS RESPONSIBLE FOR DETERMINING PROPER MOUNTING METHODS FOR SIGNS UNLESS OTHERWISE SPECIFIED. ALL MOUNTING MATERIAL S/TECHNIQUES TO BE APPROVED IN WRITING AND HAVE SIGNED APPROVAL PRIOR TO INSTALLATION.
8. ALL FASTENERS ARE TO BE CONCEALED UNLESS NOTED OTHERWISE.
9. FABRICATOR TO COORDINATE THE INSTALLATION OF SITE SIGNAGE AND ASSOCIATED FOOTINGS WITH THE GENERAL CONTRACTOR'S INSTALLATION OF THE SURROUNDING HARDSCAPE.
10. ALL TEXT SHOWN IN DETAIL DRAWINGS IS FOR REFERENCE ONLY. REFER TO SIGNAGE MESSAGE SCHEDULE FOR EXACT TEXT ON EACH SIGN.
11. ALL ROOM IDENTIFICATIONS SIGNS ARE TO BE MOUNTED 9 INCHES FROM THE CENTER OF THE SIGN TO THE LATCH SIDE OF DOOR FRAME.

Floor Plan - Signage A3

1/8" = 1'-0"

multistudio

Early Learning Center Lemann Building T.I.

318 Mississippi Street
Donaldsonville, LA 70346

Project Number: 1322-0060

owner:
Parish of Ascension
615 E Worthey Street
Gonzales, LA 70737
225.450.1200

architect:
Multistudio
3308A Magazine Street
New Orleans, LA 70115
504.681.6303
multistudio

mep engineer:
Lucien T Vivien Jr & Assoc
3001 22rd Street
Metairie, LA 70002
504 218 5409
vivienengineers.com

Issue Date: 10/14/22

Revisions

NUMBER	DESCRIPTION	DATE

UNLESS A PROFESSIONAL SEAL WITH SIGNATURE AND DATE IS AFFIXED, THIS DOCUMENT IS PRELIMINARY AND IS NOT INTENDED FOR CONSTRUCTION, RECORDING PURPOSES OR IMPLEMENTATION

MARTELL TOURNEY
REGISTERED ARCHITECT

Signage Plan & Schedule

SG101

Construction Documents

1 / M 101 FIRST FLOOR PLAN - HVAC
SCALE 1/8" = 1'-0"

GENERAL NOTES THIS SHEET:

A. DUCT SIZES SHOWN ARE FREE AREA SIZES. SEE SPECIFICATIONS FOR DUCT MATERIALS AND INSULATION REQUIRED. INSULATE DIFFUSER BACK PANS WITH 3/4" ARMAFLEX INSULATION. SEAL AND SECURE TO ENSURE VAPOR SEAL. SEE SHEET M201 FOR DETAILS.

B. COORDINATE EXACT ROUTING OF ALL DUCTWORK SO AS NOT TO CONFLICT WITH OTHER TRADES. COORDINATE EXACT LOCATION OF ALL CEILING GRILLES WITH GRID, LIGHTS, ETC. ALL DUCTWORK SHALL BE ROUTED TIGHT TO STRUCTURE.

C. CONTRACTOR IS CAUTIONED NOT TO FABRICATE OR INSTALL ANY DUCTWORK UNTIL DUCTWORK SHOP DRAWINGS HAVE BEEN SUBMITTED AND APPROVED BY ARCHITECT. REPRODUCTION OF CONTRACT DOCUMENTS NOT ACCEPTABLE.

D. FLEX DUCT RUN OUTS TO SUPPLY AIR CEILING DIFFUSERS SHALL MATCH DIFFUSER NECK SIZES. MAXIMUM FLEX DUCT RUN OUTS SHALL BE LIMITED TO 5'-0". SUBSTITUTE RIGID METAL ROUND DUCT IN LIEU THEREOF.

E. FLEXIBLE DUCT CONNECTIONS SHALL BE MECHANICALLY FASTENED AND SEALED TO PREVENT LEAKAGE.

F. PROVIDE FIRE DAMPERS IN ALL RATED PARTITIONING WHERE DUCTWORK PENETRATES. SEE SHEET M201 FOR INSTALLATION DETAILS.

G. SEE SHEET M201 FOR ALL DUCT BRANCH CONNECTION REQUIREMENTS.

H. PROVIDE MINIMUM 3' CLEARANCE BETWEEN UNIT BOX CONTROL ACCESS AND PIPING, LIGHTS, AND DUCTWORK. COORDINATE WITH ALL TRADES PRIOR TO INSTALLATION.

SPECIFIC NOTES THIS SHEET:

1. EXISTING OUTSIDE AIR DUCTWORK.
2. CONNECT NEW OUTSIDE AIR DUCT TO EXISTING. VERIFY EXACT LOCATION IN FIELD.
3. AC-3 AND 4 TO BE INSTALLED ABOVE CEILING OF WORK ROOM..
4. AC-6 AND 7 TO BE INSTALLED ON MEZZANINE LEVEL ABOVE RESTROOMS.

multistudio

Early Learning Center
Lemann Building T.I.

318 Mississippi Street
Donaldsonville, La. 70346

Project Number: 1322-0060

owner:
Owner's Name
Ascension Parish
615 E Worthey Street
Gonzales, LA 70737
225 450 1200

architect:
Multistudio
3308A Magazine Street
New Orleans, LA 70115
504 681 6303
multi studio

mep engineer:
Lucien T. Vivien Jr. & Assoc
3001 22nd Street
Metairie, LA 70002
504 218 5409
vivienengineers.com

Issue Date: OCTOBER 14, 2022

Revisions

NUMBER	DESCRIPTION	DATE

UNLESS A PROFESSIONAL SEAL WITH SIGNATURE AND DATE IS APPLIED, THIS DOCUMENT IS PRELIMINARY AND IS NOT INTENDED FOR CONSTRUCTION, RECORDING PURPOSES OR IMPLEMENTATION

10/14/22

THIS INFORMATION CONTAINED IN THIS DOCUMENT IS PROPRIETARY TO LUCIENT. VIVIEN, JR. & ASSOC., INC. THE DOCUMENT MAY NOT BE DISCLOSED, DUPLICATED, OR USED FOR ANY PURPOSE, IN WHOLE OR IN PART, WITHOUT THE PRIOR WRITTEN CONSENT OF LUCIENT. VIVIEN, JR., & ASSOC. INC.

THESE PLANS AND SPECIFICATIONS HAVE BEEN PREPARED BY OR UNDER MY CLOSE PERSONAL SUPERVISION AND, TO THE BEST OF MY KNOWLEDGE AND BELIEF, THEY COMPLY WITH ALL CITY REQUIREMENTS. WE ARE GENERALLY ADMINISTERING THE WORK AS DESIGNED BY OUR OFFICE.

Floor Plan Level 1 - Mechanical HVAC

M 101

CONSTRUCTION DOCUMNETS

GENERAL NOTES THIS SHEET:

A. DUCT SIZES SHOWN ARE FREE AREA SIZES. SEE SPECIFICATIONS FOR DUCT MATERIALS AND INSULATION REQUIRED. INSULATE DIFFUSER BACK PANS WITH 3/4" ARMAFLEX INSULATION. SEAL AND SECURE TO ENSURE VAPOR SEAL. SEE SHEET M201 FOR DETAILS.

B. COORDINATE EXACT ROUTING OF ALL DUCTWORK SO AS NOT TO CONFLICT WITH OTHER TRADES. COORDINATE EXACT LOCATION OF ALL CEILING GRILLES WITH GRID, LIGHTS, ETC. ALL DUCTWORK SHALL BE ROUTED TIGHT TO STRUCTURE.

C. CONTRACTOR IS CAUTIONED NOT TO FABRICATE OR INSTALL ANY DUCTWORK UNTIL DUCTWORK SHOP DRAWINGS HAVE BEEN SUBMITTED AND APPROVED BY ARCHITECT. REPRODUCTION OF CONTRACT DOCUMENTS NOT ACCEPTABLE.

D. FLEX DUCT RUN OUTS TO SUPPLY AIR CEILING DIFFUSERS SHALL MATCH DIFFUSER NECK SIZES. MAXIMUM FLEX DUCT RUN OUTS SHALL BE LIMITED TO 5'-0'. SUBSTITUTE RIGID METAL ROUND DUCT IN LIEU THEREOF.

E. FLEXIBLE DUCT CONNECTIONS SHALL BE MECHANICALLY FASTENED AND SEALED TO PREVENT LEAKAGE.

F. PROVIDE FIRE DAMPERS IN ALL RATED PARTITIONING WHERE DUCTWORK PENETRATES. SEE SHEET M201 FOR INSTALLATION DETAILS.

G. SEE SHEET M201 FOR ALL DUCT BRANCH CONNECTION REQUIREMENTS.

H. PROVIDE MINIMUM 3' CLEARANCE BETWEEN UNIT BOX CONTROL ACCESS AND PIPING, LIGHTS, AND DUCTWORK. COORDINATE WITH ALL TRADES PRIOR TO INSTALLATION.

SPECIFIC NOTES THIS SHEET:

1. SET CONDENSING UNIT ON ALUMINUM PLATFORM. COORDINATE PLATFORM SIZE WITH EQUIPMENT.

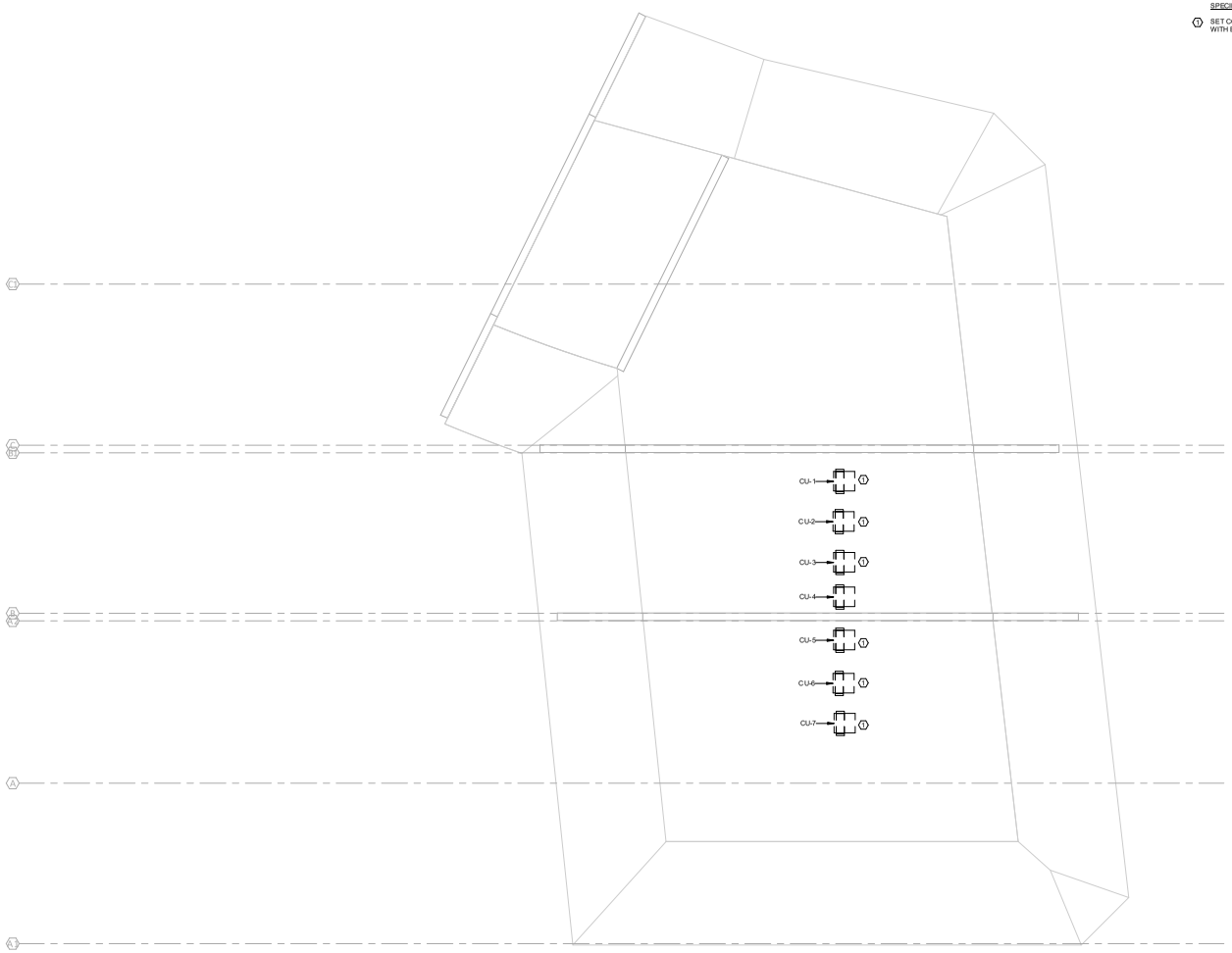

1 / M 102 ROOFPLAN - HVAC
SCALE: 1/8" = 1'-0"

multistudio

Early Learning Center
Lemann Building T.I.

318 Mississippi Street
Donaldsonville, La. 70346

Project Number: 1322-0060

owner:
Owner's Name
Ascension Parish
615 E Worthey Street
Gonzales, LA 70737
225 450 1200

architect:
Multistudio
3308A Magazine Street
New Orleans, LA 70115
504 681 6303
multi studio

mep engineer:
Lucien T. Vivien Jr. & Assoc
3001 22nd Street
Metairie, LA 70002
504 218 5409
vivienengineers.com

Issue Date: OCTOBER 14, 2022

Revisions

NUMBER	DESCRIPTION	DATE

UNLESS A PROFESSIONAL SEAL WITH SIGNATURE AND DATE IS AFFIXED, THIS DOCUMENT IS PRELIMINARY AND IS NOT INTENDED FOR CONSTRUCTION, RECORDING PURPOSES OR IMPLEMENTATION

10/14/22

THIS INFORMATION CONTAINED IN THIS DOCUMENT IS PROPRIETARY TO LUCIEN T. VIVIEN, JR. & ASSOC., INC. THE DOCUMENT MAY NOT BE DISCLOSED, DUPLICATED, OR USED FOR ANY PURPOSE, IN WHOLE OR IN PART, WITHOUT THE PRIOR WRITTEN CONSENT OF LUCIEN T. VIVIEN, JR. & ASSOC. INC.

THESE PLANS AND SPECIFICATIONS HAVE BEEN PREPARED BY OR UNDER MY CLOSE PERSONAL SUPERVISION AND, TO THE BEST OF MY KNOWLEDGE AND BELIEF, THEY COMPLY WITH ALL CITY REQUIREMENTS. WE ARE GENERALLY ADMINISTERING THE WORK AS DESIGNED BY OUR OFFICE.

Roof Plan - Mechanical HVAC

M 102

CONSTRUCTION DOCUMNETS

A/C UNIT SCHEDULE

MARK	LOCATION	TOTAL COOLING BTUH	SENSIBLE COOLING BTUH	ENTERING DB/WB °F	LEAVING DB/WB °F	HEATING BTUH	OUTSIDE AIR CFM	EXT. S.P. IN W.C.	EVAP. CAPACITY CFM	H.P.	MCA	VOLTS	PH.	DESCRIPTION
AC-1	MECHANICAL 43	35,399	24,874	73.0 / 62.5	56.4 / 55.4	49,300	-	1.0	1400	-	6.5	208	1	DX HEAT PUMP. DAIKIN MODEL: FXTQ42TAVJUD
AC-2	MECHANICAL 43	31,057	19,700	73.2 / 63.1	56.5 / 55.5	41,500	-	1.0	1050	-	4.9	208	1	DX HEAT PUMP. DAIKIN MODEL: FXTQ36TAVJUD
AC-3	ABOVE CEILING STAFF/BREAK 26	41,636	26,588	73.2 / 63.2	56.4 / 55.7	56,000	-	1.0	1520	-	6.5	208	1	DX HEAT PUMP. DAIKIN MODEL: FXTQ48TAVJUD
AC-4	ABOVE CEILING STAFF/BREAK 26	46,396	31,681	73.2 / 63.0	56.5 / 55.6	63,300	-	1.0	1800	-	8.6	208	1	HORIZONTAL DX HEAT PUMP. DAIKIN MODEL: FXTQ54TAVJUD
AC-5	STORAGE 41	30,804	19,829	73.2 / 62.9	56.5 / 55.6	41,500	-	1.0	1050	-	4.9	208	1	DX HEAT PUMP. DAIKIN MODEL: FXTQ36TAVJUD
AC-6	MEZZ	27,438	16,428	73.1 / 64.6	56.0 / 55.3	35,300	-	1.0	1000	-	4.9	208	1	DX HEAT PUMP. DAIKIN MODEL: FXTQ30TAVJUD
AC-7	MEZZ	30,931	19,600	73.5 / 63.0	57.1 / 56.1	41,500	-	1.0	1050	-	4.9	208	1	DX HEAT PUMP. DAIKIN MODEL: FXTQ36TAVJUD

NOTE: OUTSIDE AIR PROVIDED BY EXISTING OUTSIDE AIR UNIT. ALL UNITS TO BE PROVIDED WITH BI POLORIONIZER

CONDENSING UNIT SCHEDULE

MARK	LOCATION	SERVES	NOMINAL COOLING BTU/HR	HEATING BTU/HR	MCA	VOLTS	P.H.	UNIT EER	DESCRIPTION
CU-1	ROOF	AC-1	48,000	45,820	29.1	208	1	-	AIR COOLED CONDENSING UNIT. DAIKIN MODEL: RXQ48TAVJUA
CU-2	ROOF	AC-2	36,000	35,301	16.5	208	1	-	AIR COOLED CONDENSING UNIT. DAIKIN MODEL: RXQ36TAVJUA
CU-3	ROOF	AC-3	48,000	45,820	29.1	208	1	-	AIR COOLED CONDENSING UNIT. DAIKIN MODEL: RXQ48TAVJUA
CU-4	ROOF	AC-4	48,000	46,824	29.1	208	1	-	AIR COOLED CONDENSING UNIT. DAIKIN MODEL: RXQ48TAVJUA
CU-5	ROOF	AC-5	48,000	45,820	29.1	208	1	-	AIR COOLED CONDENSING UNIT. DAIKIN MODEL: RXQ48TAVJUA
CU-6	ROOF	AC-6	36,000	35,301	16.5	208	1	-	AIR COOLED CONDENSING UNIT. DAIKIN MODEL: RXQ36TAVJUA
CU-7	ROOF	AC-7	36,000	35,301	16.5	208	1	-	AIR COOLED CONDENSING UNIT. DAIKIN MODEL: RXQ36TAVJUA

DIFFUSER GRILLE & REGISTER SCHEDULE

MARK	DESCRIPTION
D	SUPPLY AIR CEILING DIFFUSER; ALL ALUMINUM CONSTRUCTION; 24X24 SQUARE PLAQUE DIFFUSER; ROUND NECK; LAY-IN, BAKED OFF-WHITE FINISH; NECK SIZE NOTED ON DRAWINGS. PRICE MODEL: A3PD
D1	SAME AS MARK "D" EXCEPT FOR 12X12 SURFACE MOUNT. PRICE MODEL: A3PD
L	6" DEEP EXTRUDED MIAMI-DADE COUNTY APPROVED WILD DRIVEN RAIN ALUMINUM LOUVER WITH DRAINABLE BLADES; SLEEVED BOX FRAME CONSTRUCTION; CONTROL DAMPER; BIRD SCREEN; KYNAR FINISH; COLOR TO BE DETERMINED BY ARCHITECT. GREENHECK EHH-601D
R	EGG CRATE RETURN GRILLE; ALL ALUMINUM CONSTRUCTION ; SURFACE MOUNTED; BAKED OFF-WHITE FINISH; SIZE NOTED ON DRAWINGS. PRICE MODEL: 80
R1	SAME AS MARK "R" EXCEPT 12X12 SURFACE MOUNT. PRICE MODEL: 80
R2	FIRE RATED EGG CRATE RETURN GRILLE; ALL ALUMINUM CONSTRUCTION; SURFACE MOUNTED; BAKED OFF-WHITE FINISH; SIZE NOTED ON DRAWINGS. PRICE MODEL: 80-FR
S	SIDEWALL SUPPLY AIR GRILLE DOUBLE DEFLECTION ALL ALUMINUM CONSTRUCTION WITH OPPOSED BLADE VOLUME DAMPER; OFF-WHITE FINISH FRONT PLADE PARALLE TO LOVER DIMENSION. PRICE MODEL: 620

MECHANICAL LEGEND

SYMBOL	DESCRIPTION	SYMBOL	DESCRIPTION
CFM	CUBIC FEET PER MINUTE	RAG	RETURN AIR GRILLE
CLG.	CEILING	(TYP)	TYPICAL
CONN.	CONNECTION	VD	VOLUME DAMPER
DN	DOWN	VTR	VENT THRU ROOF
F.D	FIRE DAMPER	T	TEMPERATURE SENSOR
O/A	OUTSIDE AIR	H	HUMIDITY SENSOR
RA	RETURN AIR		1 1/2 HOUR UL 555 FIRE DAMPER
	AIR CHAMBER (10" HIGH PIPE)		FLEX DUCT
M	MODULATING DAMPER		

EXHAUST FAN SCHEDULE

MARK	CFM	EXT. S.P.	MOTOR DATA WATTS	VOLTS	PHASE	RPM	DESCRIPTION
EF-1	140	0.5	128	120	1	1050	CEILING EXHAUST FAN WITH ALUMINUM CEILING GRILLE, BACK DRAFT DAMPER AND SPEED CONTROL. GREENHECK MODEL: SP-B-150
EF-2	140	0.5	128	120	1	1050	CEILING EXHAUST FAN WITH ALUMINUM CEILING GRILLE, BACK DRAFT DAMPER AND SPEED CONTROL. GREENHECK MODEL: B110 ES
EF-3	50	0.5	11	120	1	820	CEILING EXHAUST FAN WITH ALUMINUM CEILING GRILLE, BACK DRAFT DAMPER AND SPEED CONTROL. GREENHECK MODEL: SP-AP0511W

NOTE: FAN TO BE INTERLOCK WITH LIGHTS. COORDINATE WITH ELECTRICAL.

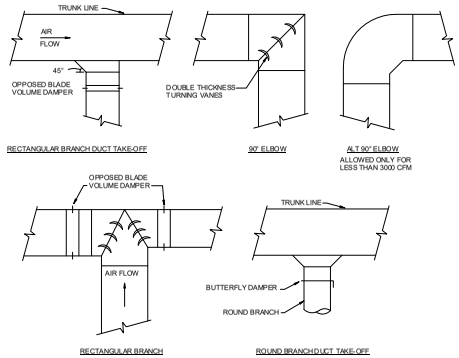

DUCT DETAILS
NOT TO SCALE

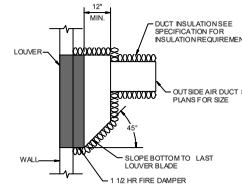

LOUVER INSTALLATION DETAIL
NO SCALE

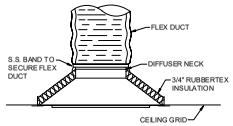

NOTE: ALL SEAMS SHALL BE PROPERLY SEALED AND INSULATION GLUED TO BACK OF DIFFUSER. INSULATION SHALL COVER ENTIRE DIFFUSER AND NECK.

DIFFUSER INSULATION DETAIL
NOT TO SCALE

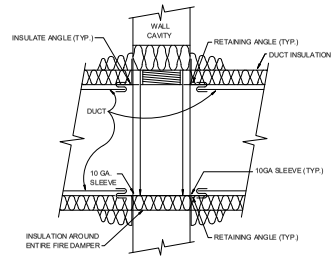

NOTE: COORDINATE INSTALLATION OF FIRE DAMPER AND INSULATION WITH ARCHITECTURAL WALL CONSTRUCTION AND INSTALLATION

FIRE DAMPER AND INSULATION INSTALLATION DETAIL
NO SCALE

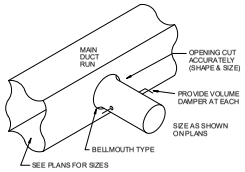

NOTE: SEE SPECIFICATIONS FOR INSULATION REQUIREMENTS

ROUND BRANCH CONNECTION
NO SCALE

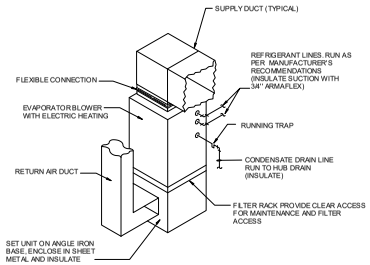

AC-1, AC-2 AND AC-5 UNIT INSTALLATION DETAIL
NO SCALE

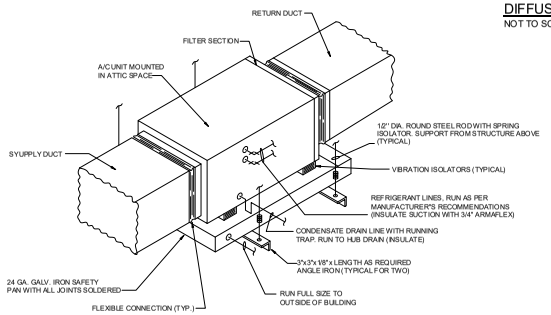

AC-3, AC-4, AC-6 AND AC-7 UNIT INSTALLATION DETAIL
NO SCALE

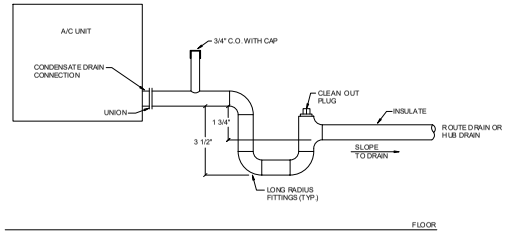

A/C UNIT CONDENSATE DRAIN DETAIL
NOT TO SCALE

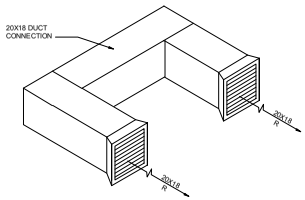

TRANSFER GRILLE DETAILS
NO SCALE

multistudio

Early Learning Center
Lemann Building T.I.

3138 Mississippi Street
Donaldsonville, La. 70346

Project Number: 1322-0060

owner:
Owner's Name
Ascension Parish
615 E Worthey Street
Gonzales, LA 70737
225 450 1200

architect:
Multistudio
3100A Magazine Street
New Orleans, LA 70115
504 681 6303
multi studio

mep engineer:
Lucien T. Vivien Jr. & Assoc
3001 22nd Street
Metairie, LA 70002
504 218 5409
vivienengineers.com

Issue Date: OCTOBER 14, 2022

Revisions

NUMBER	DESCRIPTION	DATE

UNLESS A PROFESSIONAL SEAL WITH SIGNATURE AND DATE IS AFFIXED, THIS DOCUMENT IS PRELIMINARY AND IS NOT INTENDED FOR CONSTRUCTION, BIDDING PURPOSES OR IMPLEMENTATION

10/14/22

THIS INFORMATION CONTAINED IN THIS DOCUMENT IS PROPRIETARY TO LUCIEN T. VIVIEN, JR. & ASSOC., INC. THE DOCUMENT MAY NOT BE DISCLOSED, DUPLICATED, OR USED FOR ANY PURPOSE, IN WHOLE OR IN PART, WITHOUT THE PRIOR WRITTEN CONSENT OF LUCIEN T. VIVIEN, JR., & ASSOC. INC.

THESE PLANS AND SPECIFICATIONS HAVE BEEN PREPARED BY OR UNDER MY CLOSE PERSONAL SUPERVISION AND, TO THE BEST OF MY KNOWLEDGE AND BELIEF, THEY COMPLY WITH ALL CITY REQUIREMENTS. WE ARE GENERALLY ADMINISTERING THE WORK AS DESIGNED BY OUR OFFICE.

Schedules and Details - Mechanical HVAC

M 201

CONSTRUCTION DOCUMNETS