Boring No. B-8

Project: New River Canal Widening

Location: Smith Bayou to New River Canal's East Weir
Ascension Parish, LA

Client: H. Davis Cole & Associates, LLC
New Orleans, LA

GSE&T File No.: 18-087
Date: 10/5/2018
Technician: D. Vu
Rig Type: Truck

Page: 1 of 2

Coord.: 30° 14' 12.4" N, 90° 54' 31.3" W
Approximate Surface Elevation: +6.5 (feet, NAVD88)

Depth (Feet)	Field Test TP/ SPT	Comp. Strength (tsf)	Water Content (%)	Wet Density (pcf)	LL (%)	PI (%)	Passing No. 200 (%)	Description of Stratum
0	2.50 (PP)	2.341	23.4	122	60	41		Very Stiff dark gray CLAY (CH) with silt
	1.50 (PP)		21.9					Medium Stiff gray SILTY CLAY (CL)
5	0.50 (PP)	0.573	24.5	120	43	21		
	0.50 (PP)	0.515	24.0	121				
	0.50 (PP)		33.0					
10	0.25 (PP)		32.2	117				Medium Stiff gray CLAY (CH) with silt, sand
15	0.50 (PP)	0.821	35.8	123				[* - UU confining pressure = 8.0 psi]
	0.50 (PP)		42.6					Medium Stiff gray SILTY CLAY (CL)
20	0.50 (PP)	0.512	41.9	120	42	19		with sand
25	0.25 (PP)	0.500	50.6	108				Medium Stiff gray CLAY (CH) with trace silt, trace wood
30	0.25 (PP)		35.5				94.5	Soft gray CLAY (CH) with silt, trace sand
35	0.25 (PP)	0.252	35.2	113				[* - UU confining pressure = 12.1 psi]
40								

Sample Legend:
- Core (Shelby Tube)
- Standard Penetration (SPT)
- No Recovery
- Auger Sample

Comments/Notes:
- Boring was drilled per LA DOTD & LA DEQ requirements upon completion.
- Dry Auger Depths = 0-12 ft.
- Rotary Wash Depths = 12-20 ft.
- Ground Water = Encountered at 12 ft. (b.g.s. Encountered at 31.0 ft. b.g.s.
- Surface elevation based on provided survey provided by HDC.

GULF SOUTH ENGINEERING AND TESTING, INC.
Geotechnical & Materials Consultants

Boring No. B-8A

Project: Ascension Parish Government
New River - Tilting Weir Control Struct

Location: Weber City Rd.
Gonzales, LA

Client: H. Davis Cole & Associates, LLC
New Orleans, LA

GSE&T File No.: 22-021
Date: 3/31/2022
Technician: B. Beard
Rig Type: Track

Page: 1 of 1

Coord: 30° 14' 12.3" N, 90° 54' 31.2" W
Apprx. Surface Elevation = +6.5 (feet, NAVD88]

Depth (Feet)	Field Test TP/ SPT	Comp. Strength (tsf)	Water Content (%)	Wet Density (pcf)	LL (%)	PI (%)	Passing No. 200 (%)	Description of Stratum
0								Soft gray CLAY (CH) with silt, trace sand
5	0.25 (PP)		28.8					
	2.50 (PP)	1.941**	40.5	115				Stiff gray CLAY (CH) with silt [** - possible slick-in-sided failure]
50								*Boring was washed drilled between 0 to 53 foot depth with no sampling. Log refers to GSET File 18-087, Boring Log B-8 for soil profile above the apprx. 53 ft. depth.*
55	2.00 (PP)	1.678	25.8	117				Stiff gray CLAY (CH) with trace wood
60	1.25 (PP)	1.001*	50.8	102				Stiff gray CLAY (CH) with wood, trac shell. [* - Low strain failure; possible slick-in-sided]
65	2.75 (PP)	3.306	23.2	127			14.9	Stiff to Very Stiff blue and gray CLAY (CH) with sand, silt layers
70	3.75 (PP)	1.628*	15.5	136				[* - Low strain failure; possible slick-in-sided]
75	4.50 (PP)	2.314*	26.3	127				[* - Low strain failure; possible slick-in-sided]
80	2.00 (PP)	0.998*	29.3	118			98.1	Medium Stiff bluish gray CLAY (CH) with silt [* - Low strain failure; possible slick-in-sided]
								Boring completed at 80 feet below the ground surface

Sample Legend:
- Core (Shelby Tube)
- Standard Penetration (SPT)
- No Recovery
- Auger Sample

Comments/Notes:
- Boring was drilled per LA DOTD & LA DEQ requirements upon completion.
- Dry Auger Depths = n/a
- Rotary Wash Depths = 0 to 80 ft.
- Ground Water = Not observed due to the introduction of drilling mud into the borehole.

GULF SOUTH ENGINEERING AND TESTING, INC.
Geotechnical & Materials Consultants

SOIL BORINGS

WARNING
0 1/2 1
IF THIS BAR DOES NOT MEASURE 1" (BASED ON 22"x34" SHEET) THEN DRAWING IS NOT TO SCALE.

H. Davis Cole & Associates, LLC
CONSULTING ENGINEERS
NEW ORLEANS, LA

MARK	DESCRIPTION	DATE	BY	CHKD.
1	ADDENDUM #1	10/31/22	HDC	HDC

REVISION RECORD

DESIGNED BY: HDC
DRAWN BY: RM
CHECKED BY: HDC
DATE: Oct-22
DETAILED BY: RM
HDC PROJECT NO. 2021-14

NEW RIVER TILTING WEIR STRUCTURE
ASCENSION PARISH LOUISIANA
EAST ASCENSION CONSOLIDATION GRAVITY DRAINAGE DISTRICT 1
ASCENSION PARISH
SOIL BORINGS

SHEET ID
C6

SHEET SET
13 OF 30

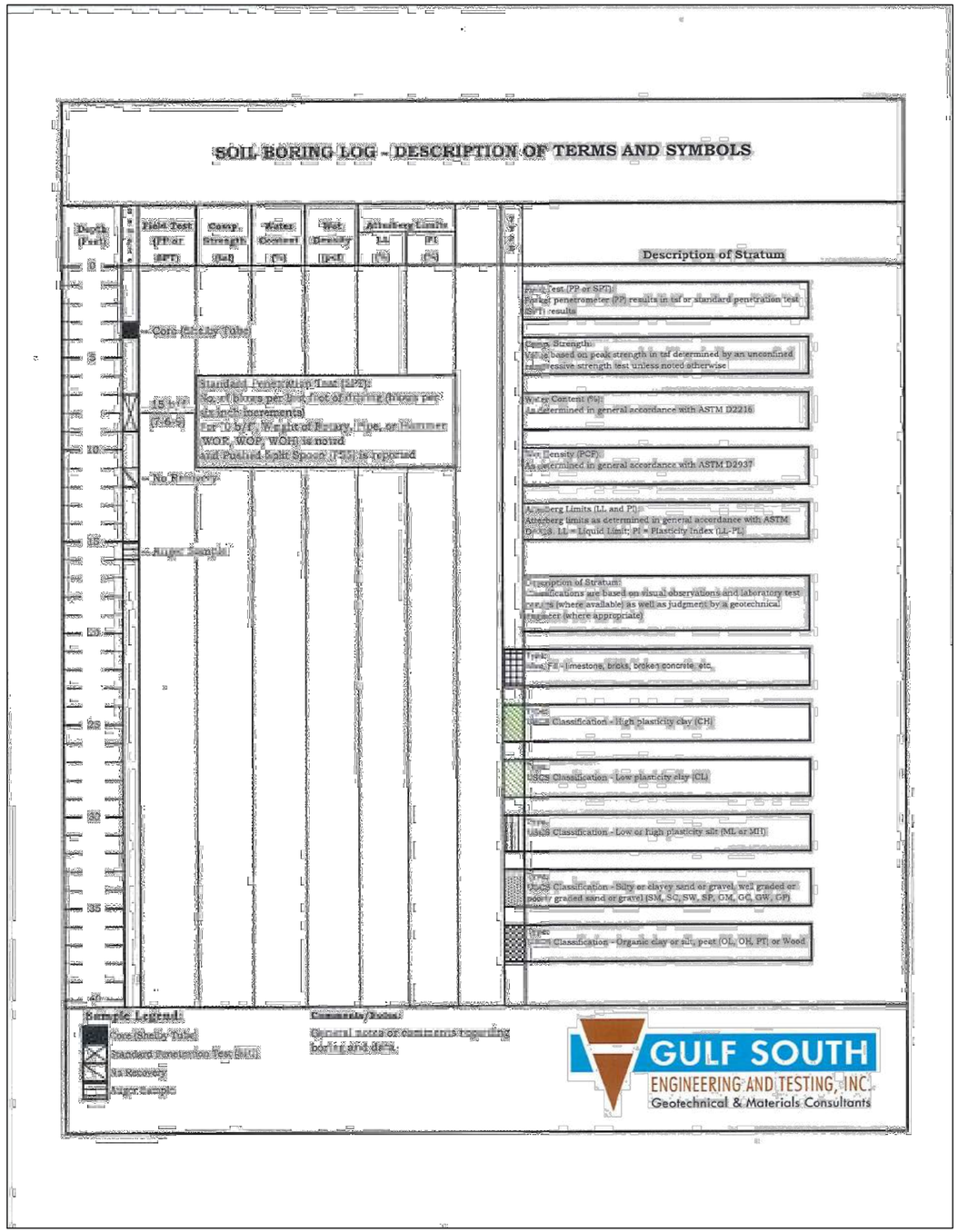

SOIL BORING LOG

WARNING

0 1/2 1

IF THIS BAR DOES NOT MEASURE 1" (BASED ON 22"X34" SHEET) THEN DRAWING IS NOT TO SCALE.

HDC

H. Davis Cole & Associates, LLC
Consulting Engineers
NEW ORLEANS, LA

MARK	DESCRIPTION	DATE	BY	CHKD.
1	ADDENDUM #1	10/31/22	HDC	HDC

REVISION RECORD

DESIGNED BY: HDC
DRAWN BY: RM
CHECKED BY: HDC
DATE: Oct-22
DETAILED BY: RM
HDC PROJECT NO. 2021-14

NEW RIVER TILTING WEIR STRUCTURE
ASCENSION PARISH LOUISIANA
EAST ASCENSION CONSOLIDATION GRAVITY DRAINAGE DISTRICT 1
ASCENSION PARISH
SOIL BORING LOG

SHEET ID
C7

SHEET SET
14 OF 30

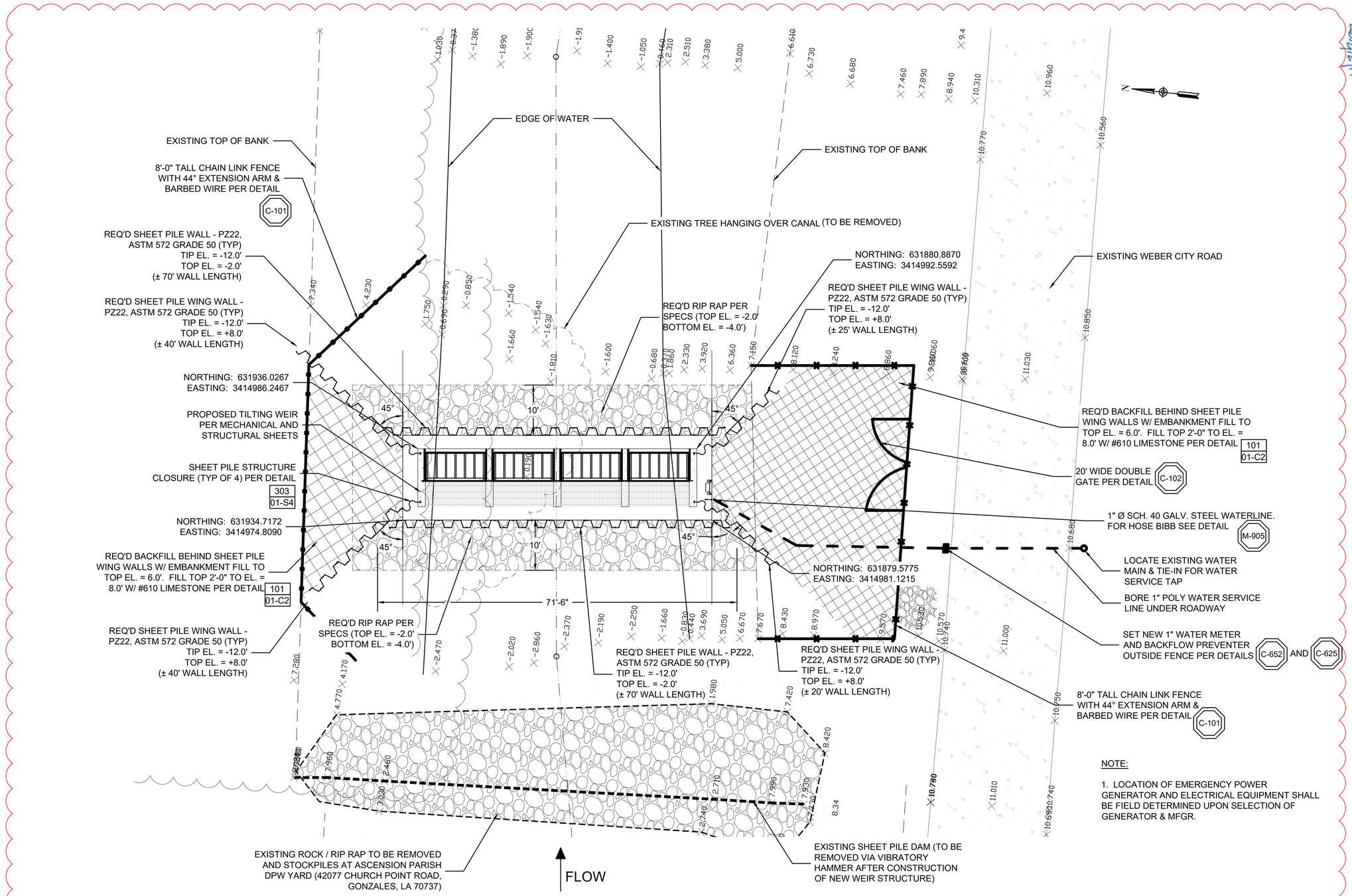

NOTE:

1. LOCATION OF EMERGENCY POWER GENERATOR AND ELECTRICAL EQUIPMENT SHALL BE FIELD DETERMINED UPON SELECTION OF GENERATOR & MFGR.

PROPOSED SITE PLAN

SCALE: 1" = 10'-0" (22"x34" SHEET)

WARNING

0 1/2 1

IF THIS BAR DOES NOT MEASURE 1" (BASED ON 22"X34" SHEET) THEN DRAWING IS NOT TO SCALE.

HPC

H. Davis Cole & Associates, LLC
Professional Engineering and Land Surveying
NEW ORLEANS, LA

MARK	DESCRIPTION	DATE	BY	CHK'D
1	ADDENDUM #1	10/31/22	HDC	HDC

REVISION RECORD

DESIGNED BY: HDC
DRAWN BY: RM
CHECKED BY: HDC
DATE: Oct-22
DETAILED BY: RM
HDC PROJECT NO. 2021-14

NEW RIVER TILTING WEIR STRUCTURE
ASCENSION PARISH LOUISIANA
EAST ASCENSION CONSOLIDATION GRAVITY DRAINAGE DISTRICT 1
ASCENSION PARISH
PROPOSED SITE PLAN

SHEET ID
01-C1

SHEET SET
15 OF 30

GENERAL NOTES:

1. CROSS SECTION DEVELOPED FROM SURVEY PREPARED BY BRYANT HAMMETT & ASSOCIATES, LLC.
2. SEE MECHANICAL AND STRUCTURAL SHEETS FOR ADDITIONAL INFORMATION AND CONNECTION DETAILS.

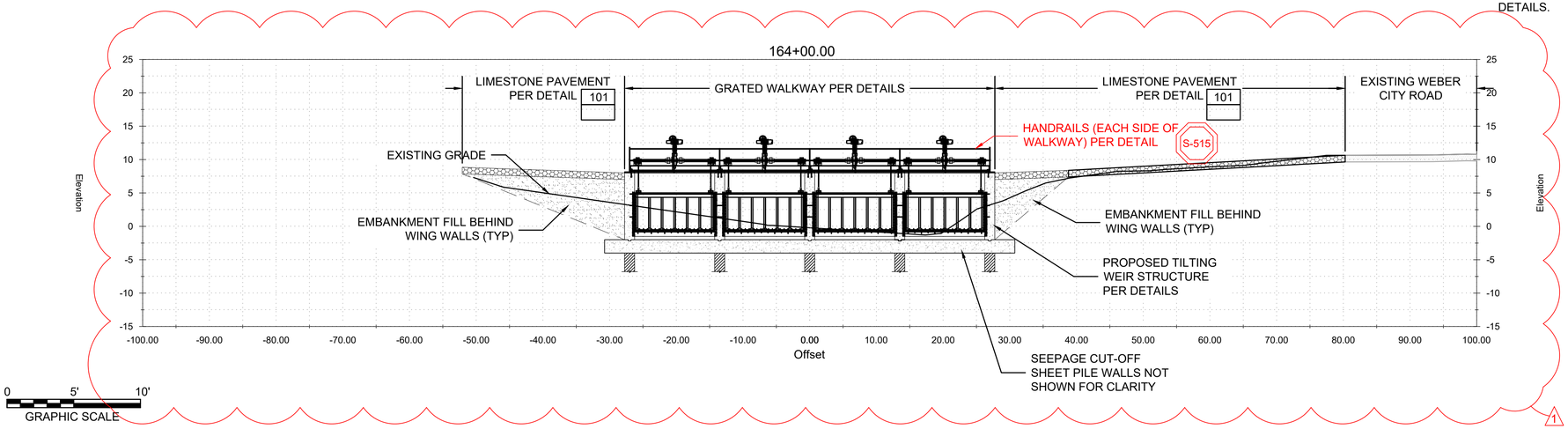

WEIR STRUCTURE SECTION 100

SCALE: N.T.S.

GENERAL NOTES:

1. SEE SITE PLAN FOR LOCATION.

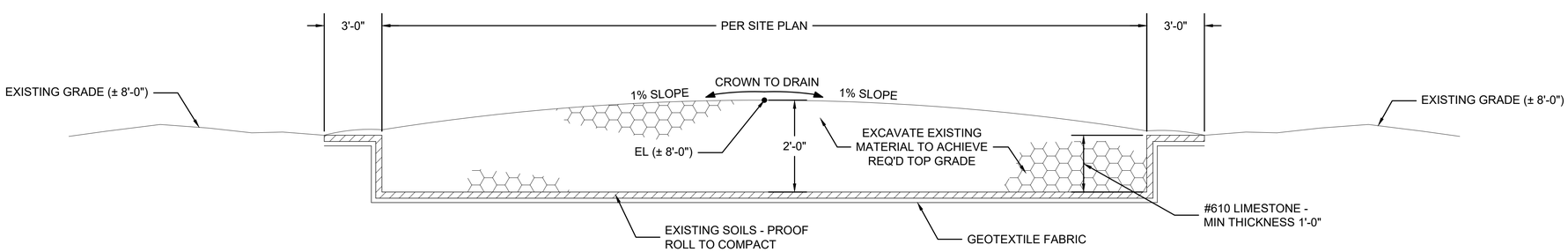

LIMESTONE PAVEMENT DETAIL 101

SCALE: N.T.S.

WARNING

0 1/2 1

IF THIS BAR DOES NOT MEASURE 1" (BASED ON 22"x34" SHEET) THEN DRAWING IS NOT TO SCALE.

H. Davis Cole & Associates, LLC
Consulting Engineers
NEW ORLEANS, LA

MARK	DESCRIPTION	DATE	BY	CHK'D
1	ADDENDUM #1	10/31/22	HDC	HDC

REVISION RECORD

DESIGNED BY: HDC
DRAWN BY: RM
CHECKED BY: HDC
DATE: Oct-22
DETAILED BY: RM
HDC PROJECT NO. 2021-14

NEW RIVER TILTING WEIR STRUCTURE
ASCENSION PARISH LOUISIANA
EAST ASCENSION CONSOLIDATION GRAVITY DRAINAGE DISTRICT 1
ASCENSION PARISH
SECTION VIEW

SHEET ID
01-C2

SHEET SET
16 OF 30

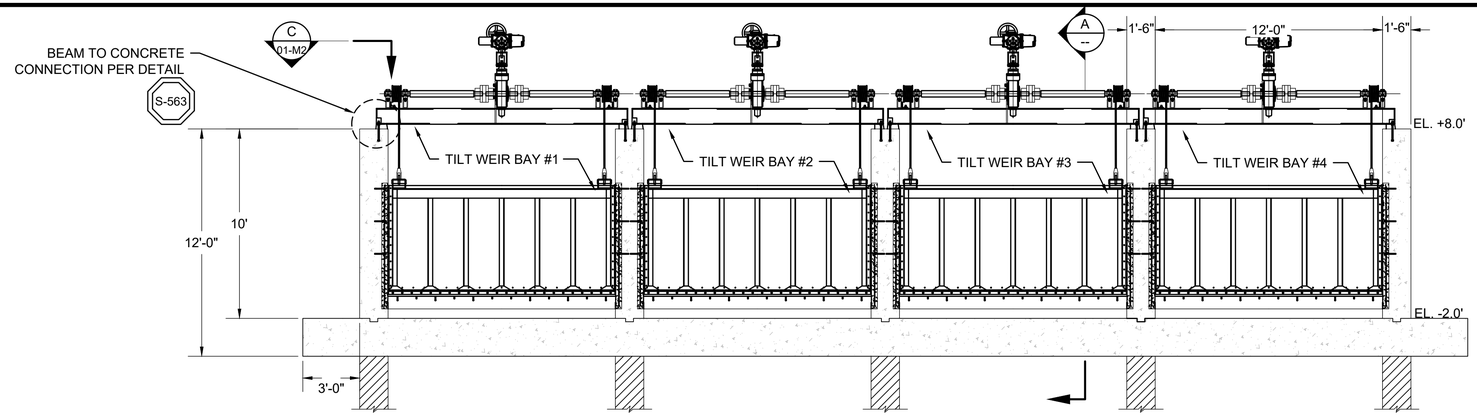

ELEVATION VIEW

SCALE: 1/4" = 1'-0" (22"x34" SHEET)

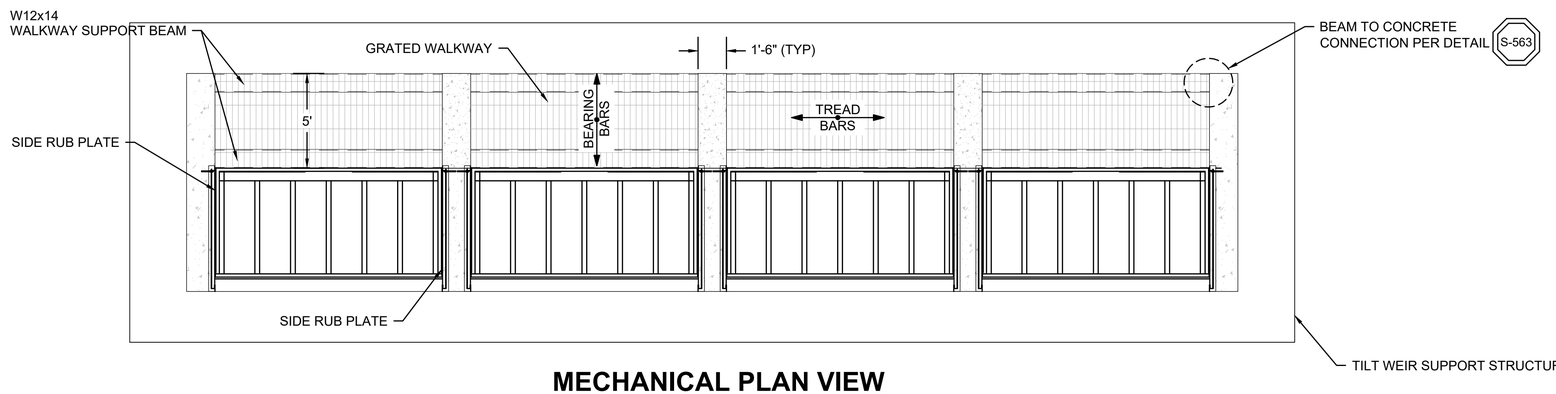

MECHANICAL PLAN VIEW

SCALE: 1/4" = 1'-0" (22"x34" SHEET)

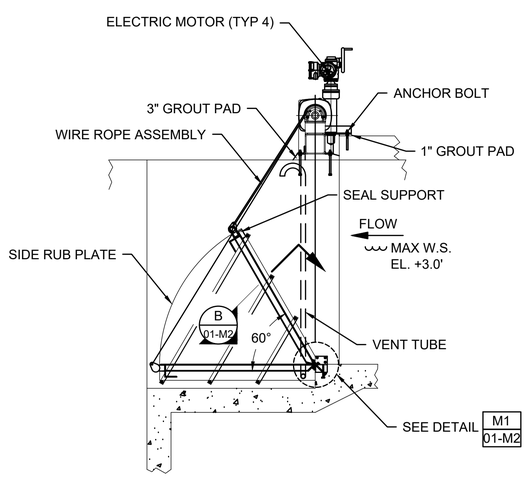

SECTION VIEW

A
--

SCALE: 1/2" = 1'-0" (22"x34" SHEET)

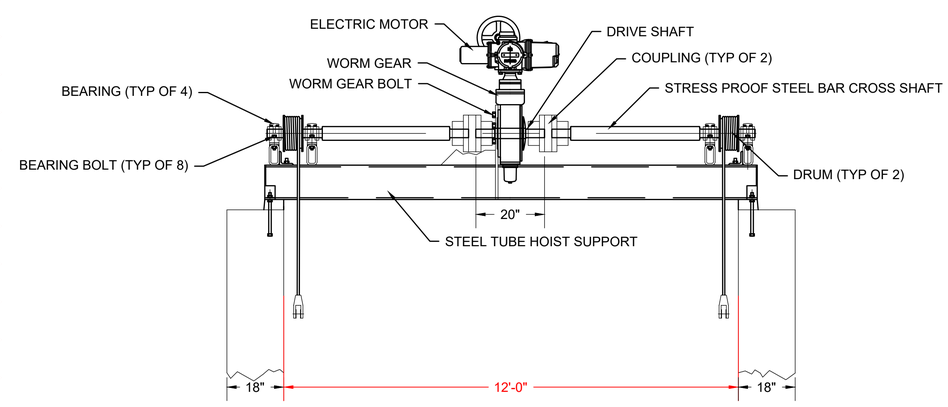

HOIST ASSEMBLY

SCALE: 1/2" = 1'-0" (22"x34" SHEET)

1

NOTES:

1. GROUT FILL AFTER GATE HAS BEEN INSTALLED AND ALIGNED.

2. SIDE WALK BLOCKOUT TO INCREASE AS SHOWN TO ACCOMMODATE ANCHOR BOLTS.

3. THE DRUM REQUIRES 3 DEAD WRAPS PRIOR TO ANCHORING THE WIRE ROPE THRU THE DRUM FLANGE WITH THE GATE IN THE FULL DOWN POSITION.

4. ANCHOR BOLTS ARE DESIGNED FOR USE WITH THE HILTI HIT-RE 500-SD ADHESIVE INJECTION SYSTEM OR EQUAL INSTALLED IN DRY CONCRETE.

STATE OF LOUISIANA
HOWARD DAVIS COLE
License No. 30394
PROFESSIONAL ENGINEER

WARNING
0 1/2 1
IF THIS BAR DOES NOT MEASURE 1" (BASED ON 22"x34" SHEET) THEN DRAWING IS NOT TO SCALE.

H. Davis Cole & Associates, LLC
Consulting Engineers
NEW ORLEANS, LA

MARK	DESCRIPTION	DATE	BY	CHK'D.
1	ADDENDUM #1	10/31/22	HDC	HDC

REVISION RECORD

DESIGNED BY: HDC
DRAWN BY: RM
CHECKED BY: HDC
DATE: Oct-22
DETAILED BY: RM
HDC PROJECT NO. 2021-14

NEW RIVER TILTING WEIR STRUCTURE
ASCENSION PARISH LOUISIANA
EAST ASCENSION CONSOLIDATION GRAVITY DRAINAGE DISTRICT 1
ASCENSION PARISH
TILTING WEIR MECHANICAL DETAILS

SHEET ID
01-M1

SHEET SET
17 OF 30

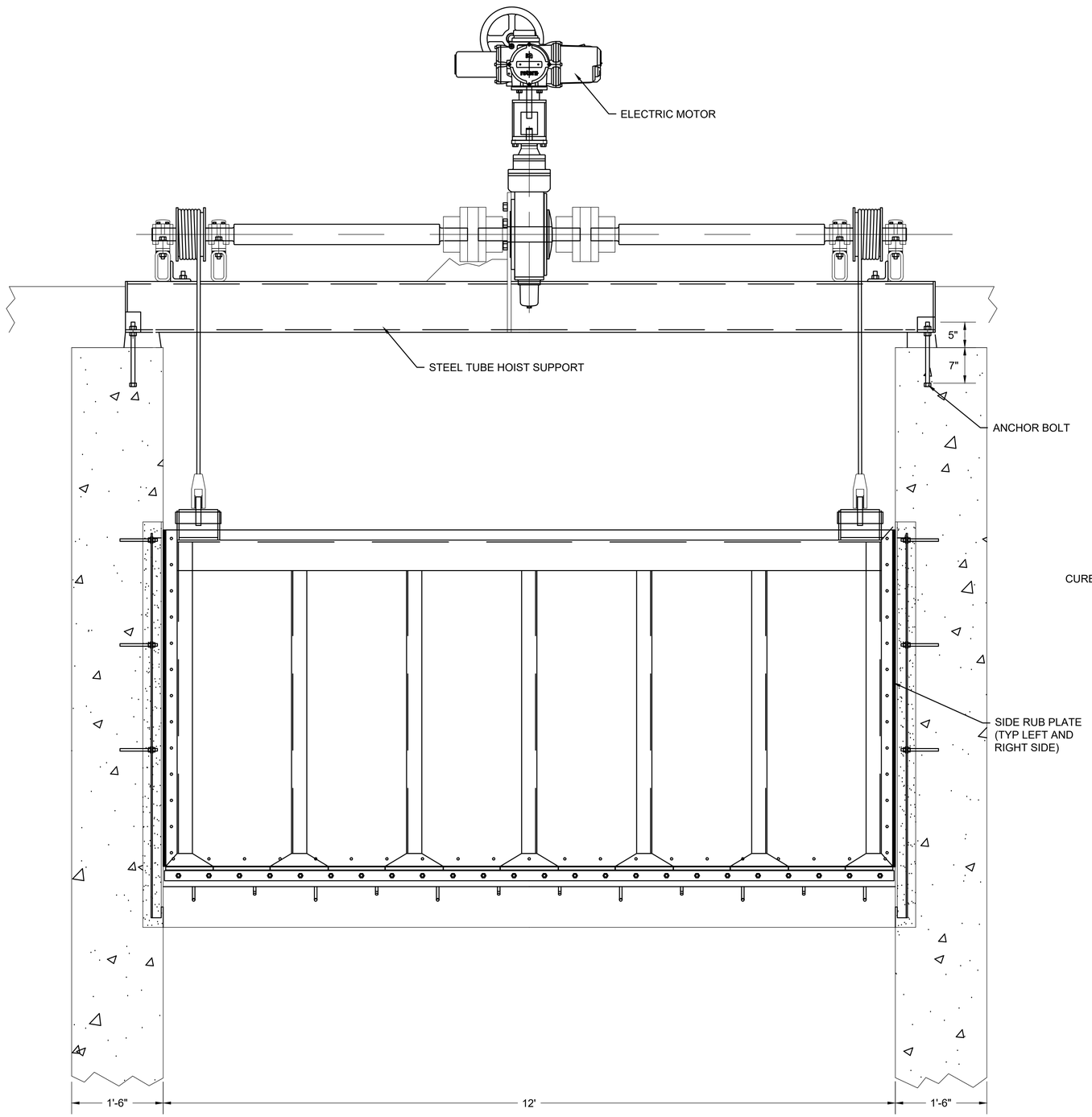

ELEVATION

SCALE: 1/2" = 1'-0" (22"x34" SHEET)

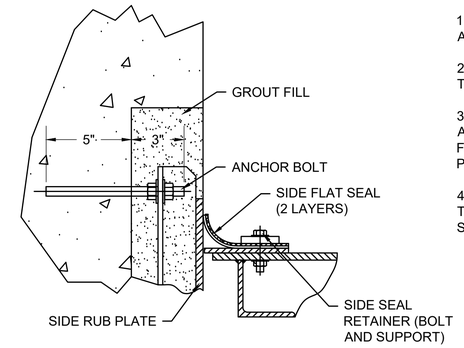

SECTION B / 01-M1

SCALE: N.T.S.

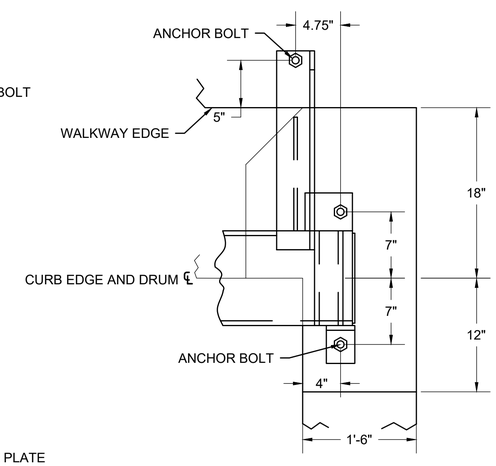

SECTION C / 01-M1

SCALE: N.T.S.

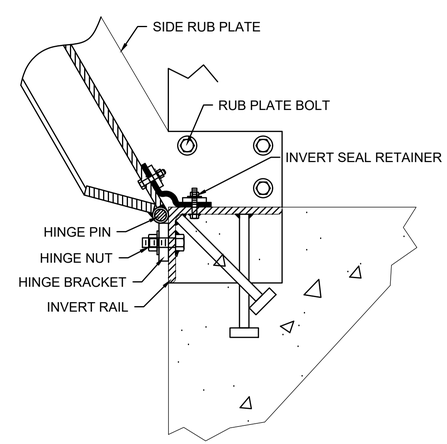

MECHANICAL DETAIL M1 / 01-M1

SCALE: N.T.S.

NOTES:

1. GROUT FILL AFTER GATE HAS BEEN INSTALLED AND ALIGNED.

2. SIDE WALK BLOCKOUT TO INCREASE AS SHOWN TO ACCOMMODATE ANCHOR BOLTS.

3. THE DRUM REQUIRES 3 DEAD WRAPS PRIOR TO ANCHORING THE WIRE ROPE THRU THE DRUM FLANGE WITH THE GATE IN THE FULL DOWN POSITION.

4. ANCHOR BOLTS ARE DESIGNED FOR USE WITH THE HILTI HIT-RE 500-SD ADHESIVE INJECTION SYSTEM OR EQUAL INSTALLED IN DRY CONCRETE.

STATE OF LOUISIANA
HOWARD DAVIS COLE
License No. 30394
REGISTERED PROFESSIONAL ENGINEER

WARNING
0 1/2 1
IF THIS BAR DOES NOT MEASURE 1" (BASED ON 22"x34" SHEET) THEN DRAWING IS NOT TO SCALE.

H. Davis Cole & Associates, LLC
CONSULTING ENGINEERS
NEW ORLEANS, LA

MARK	DESCRIPTION	DATE	BY	CHK'D.
1	ADDENDUM #1	10/31/22	HDC	HDC

REVISION RECORD

DESIGNED BY: HDC
DRAWN BY: RM
CHECKED BY: HDC
DATE: Oct-22
DETAILED BY: RM
HDC PROJECT NO. 2021-14

NEW RIVER TILTING WEIR STRUCTURE
ASCENSION PARISH LOUISIANA
EAST ASCENSION CONSOLIDATION GRAVITY DRAINAGE DISTRICT 1
ASCENSION PARISH
TILTING WEIR MECHANICAL DETAILS

SHEET ID
01-M2

SHEET SET
18 OF 30

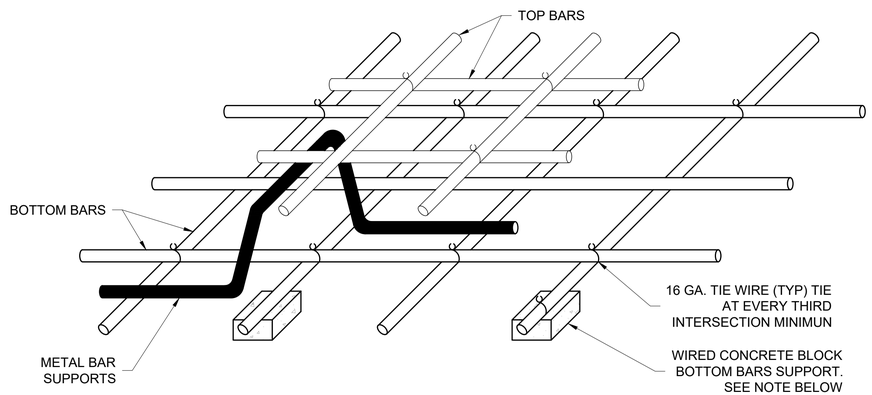

NOTE:
METAL BAR SUPPORTS, IF USED IN SLABS NOT ON GROUND, SHALL NOT MAKE CONTACT WITH FORMS

REINFORCEMENT SUPPORT (S-204)

SCALE: N.T.S. (22"x34" SHEET)

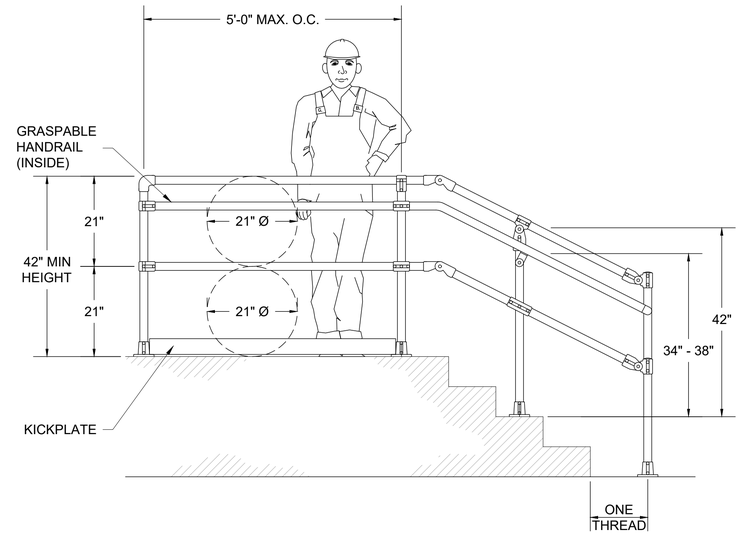

NOTES:
1. THIS DRAWING IS A GENERAL ASSEMBLY DRAWING SHOWING TYPICAL RAILING DETAILS AND ARRANGEMENTS ONLY. CONTRACTOR SHALL PROVIDE DETAILED SHOP DRAWINGS PRIOR TO FABRICATION.
2. RAILING SUPPLIER SHALL BE RESPONSIBLE FOR DESIGN OF ALL RAIL ELEMENTS AND RAIL ACCESSORIES.
3. RAIL SYSTEM SHALL COMPLY WITH THE DRAWINGS AND SPECIFICATIONS.

NOTES:
1. TWO-RAIL SYSTEM BY HOLLEANDER SPEED RAIL, OR APPROVED EQUAL.
2. SUBMIT SHOP DRAWINGS FOR REVIEW.

TWO-RAIL SAFETY RAILING (S-515)

SCALE: N.T.S. (22"x34" SHEET)

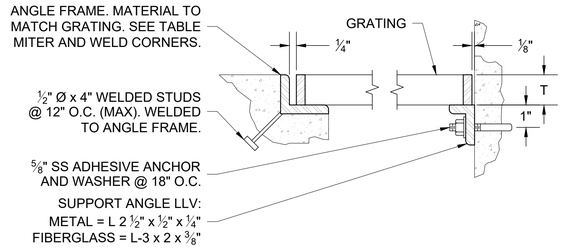

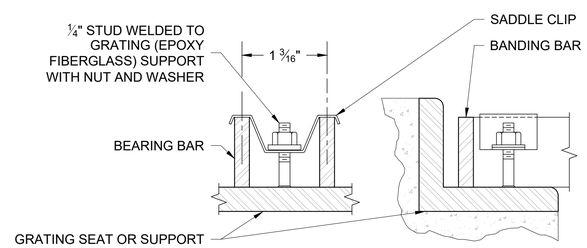

GRATING CLIP DETAIL

GRATING FRAME TABLE SIZED TO MATCH GRATING (FOR FIBERGLASS USE CONTINUOUS PURTRUDED FIBERGLASS SEAT & ANCHOR)	
GRATING DEPTH T	FRAME ANGLE (STEEL)
1"	1 ¾ x 1 ¼ x ¼ (1 ¼ x 1 ¼ x ¼)
1 ¼"	2 x 1 ½ x ¼ (1 ½ x 1 ½ x ¼)
1 1/2"	1 ¾ x 1 ¾ x ¼
1 ¾"	2 x 2 x ¼
2"	* 2 ½ x 2 ½ x ½
2 ¼"	2 ½ x 2 ½ x ¼
2 ½"	3 x 3 x ½

* OR USE 2 ½" X 2 ½" ¼" WITH ¼" SHIM PLATE WELDED TO BOTTOM.

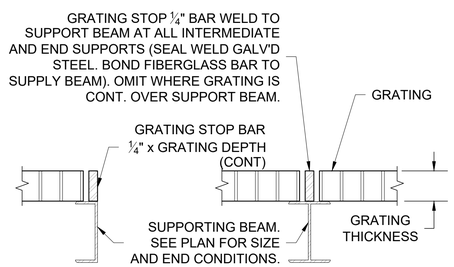

GRATING STOP DETAIL

NOTES:
1. UNLESS INDICATED OTHERWISE, ALL GRATING SHALL BE ALUMINUM.
2. GRATING DEPTH TO BE DETERMINED BY MANUFACTURER AND APPROVED BY ENGINEER (UNO)
3. ALL ENDS AND OPENINGS SHALL BE BANDED.
4. WEIGHT OF GRATING SECTION SHALL NOT EXCEED 80 LBS.
5. METAL BEARING BARS SHALL BE DEPTH T X 3/16" AT 1 3/16" O.C., CROSS BARS SHALL BE AT 4" O.C.
6. PROVIDE A MINIMUM OF 4 PANEL CLIPS PER GRATING PANEL, APPROX. 4" FROM PANEL CORNERS. MAXIMUM CLIP SPACING AT 36" O.C.
7. MATERIALS:
   A. ALUMINUM GRATING - USE ALUMINUM ANGLE SUPPORTS AND STAINLESS STEEL BOLTS AND CLIPS.
   B. GALVANIZED STEEL GRATING - USE STEEL ANGLE SUPPORTS, BOLTS, AND CLIPS. GALVANIZED AFTER FABRICATION.
   C. STAINLESS STEEL GRATING - USE STAINLESS STEEL ANGLE SUPPORTS, BOLTS AND CLIPS.
   D. FIBERGLASS GRATING - USE FIBERGLASS FOR ALL COMPONENTS, EXCEPT DRILLED ANCHORS; ALL CUT EDGES SHALL BE SEALED WITH RESIN. BONDING: USE EPOXY ADHESIVE BONDING AGENT.

GRATING (S-501)

SCALE: N.T.S. (22"x34" SHEET)

WARNING
0 1/2 1
IF THIS BAR DOES NOT MEASURE 1" (BASED ON 22"x34" SHEET) THEN DRAWING IS NOT TO SCALE.

H. Davis Cole & Associates, LLC
Consulting Engineers
NEW ORLEANS, LA

MARK	DESCRIPTION	DATE	BY	CHK'D.
A	ADDENDUM #1	10/31/22	HDC	HDC

REVISION RECORD

DESIGNED BY: HDC
DRAWN BY: RM
CHECKED BY: HDC
DATE: Oct-22
DETAILED BY: RM
HDC PROJECT NO. 2021-14

NEW RIVER TILTING WEIR STRUCTURE
ASCENSION PARISH LOUISIANA
EAST ASCENSION CONSOLIDATION GRAVITY DRAINAGE DISTRICT 1
ASCENSION PARISH
STRUCTURAL DETAILS

SHEET ID
S1

SHEET SET
19 OF 30

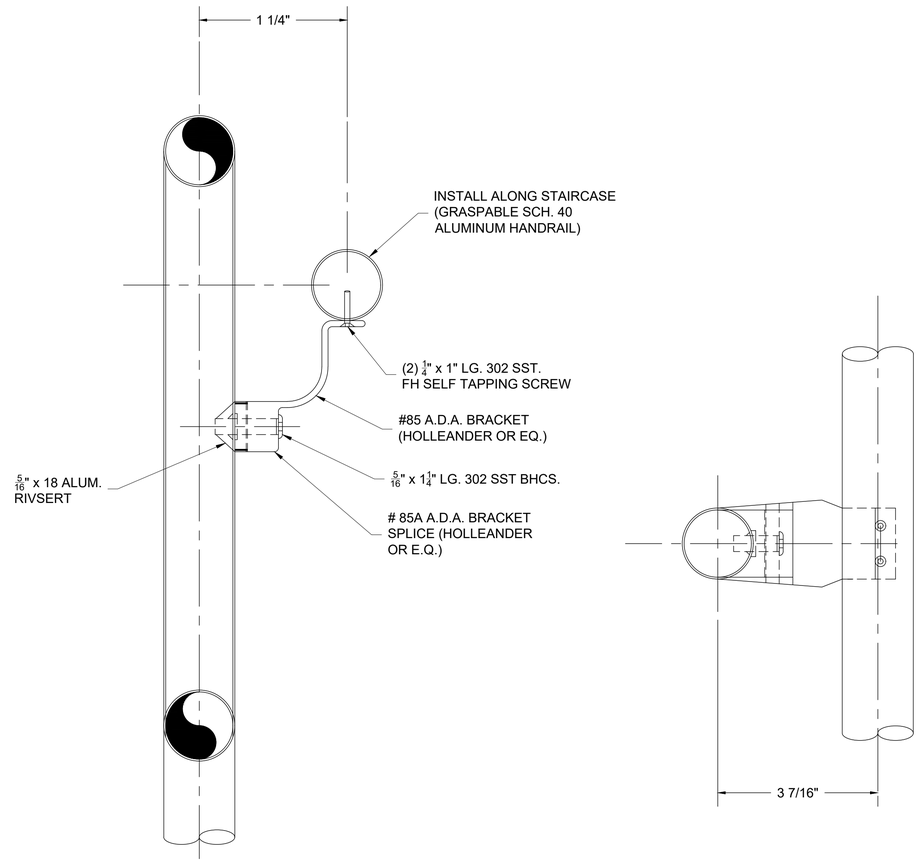

SAFETY RAIL SECTION

SCALE: N.T.S. (22"x34" SHEET)

S-516

WARNING

0 1/2 1

IF THIS BAR DOES NOT MEASURE 1" (BASED ON 22"X34" SHEET) THEN DRAWING IS NOT TO SCALE.

H. Davis Cole & Associates, LLC
Consulting Engineers
NEW ORLEANS, LA

MARK	DESCRIPTION	DATE	BY	CHK'D.
1	ADDENDUM #1	10/31/22	HDC	HDC

REVISION RECORD

DESIGNED BY: HDC
DRAWN BY: RM
CHECKED BY: HDC
DATE: Oct-22
DETAILED BY: RM
HDC PROJECT NO. 2021-14

NEW RIVER TILTING WEIR STRUCTURE
ASCENSION PARISH LOUISIANA
EAST ASCENSION CONSOLIDATION GRAVITY DRAINAGE DISTRICT 1
ASCENSION PARISH
STRUCTURAL DETAILS

SHEET ID
S2

SHEET SET
20 OF 30

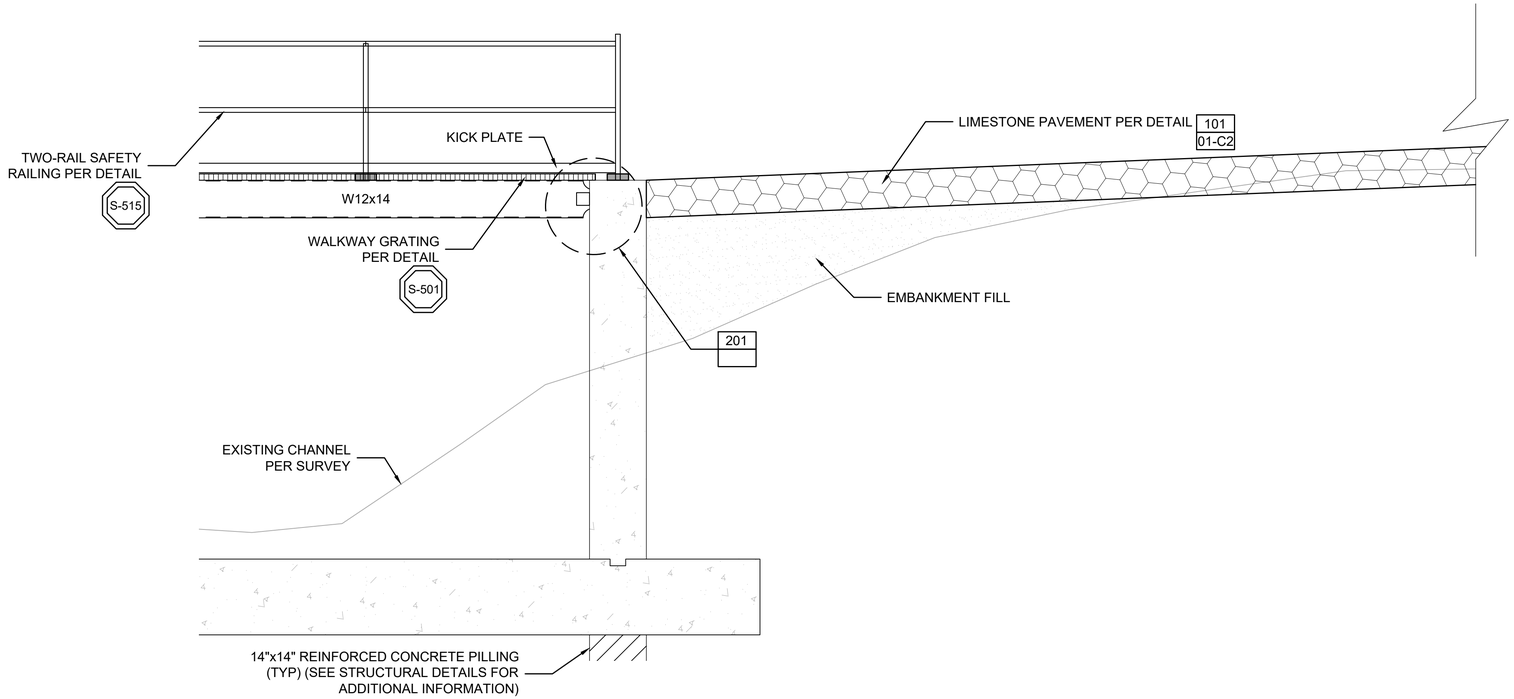

WEIR STRUCTURE TO WALKWAY 200

SCALE: N.T.S.

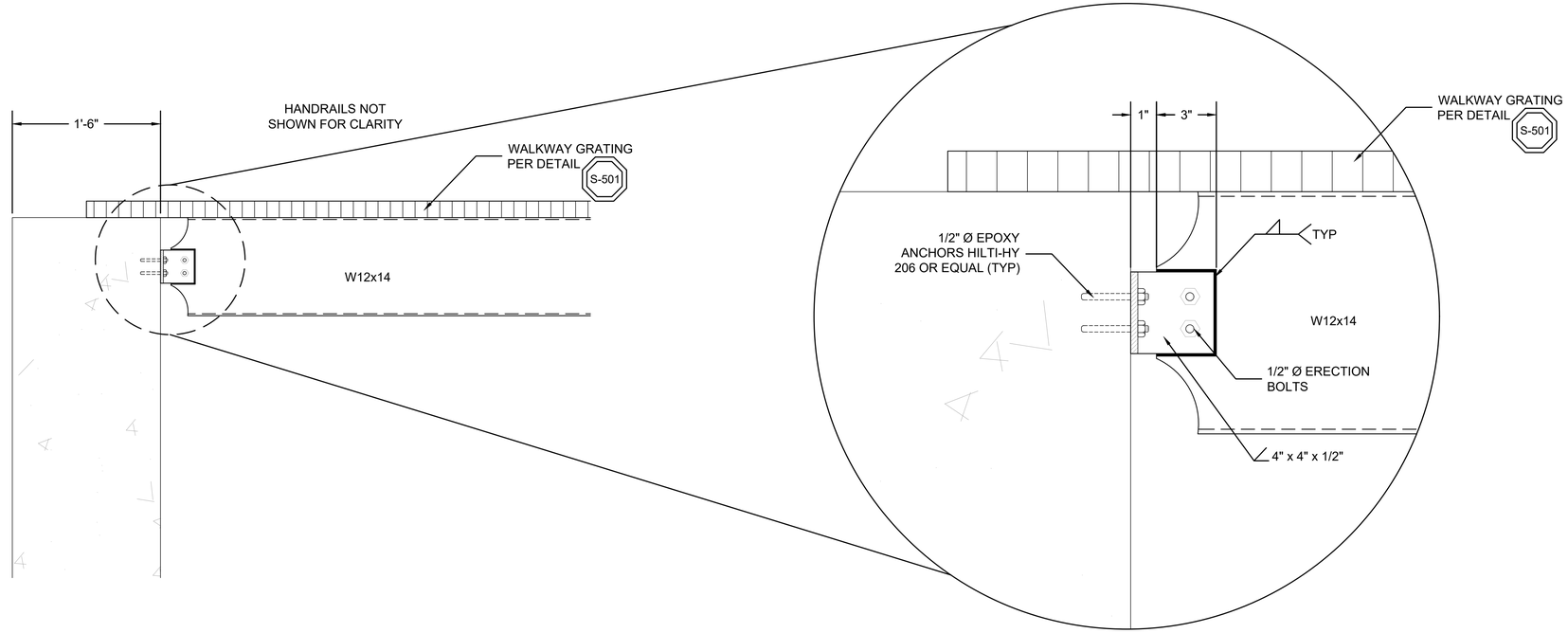

WEIR STRUCTURE TO WALKWAY CONNECTION 201

SCALE: N.T.S.

WARNING

0 1/2 1

IF THIS BAR DOES NOT MEASURE 1" (BASED ON 22"X34" SHEET) THEN DRAWING IS NOT TO SCALE.

H. Davis Cole & Associates, LLC
Consulting Engineers
NEW ORLEANS, LA

MARK	DESCRIPTION	DATE	BY	CHK'D.
1	ADDENDUM #1	10/31/22	HDC	HDC

REVISION RECORD

DESIGNED BY:	HDC
DRAWN BY:	RM
CHECKED BY:	HDC
DATE:	Oct-22
DETAILED BY:	RM
HDC PROJECT NO.	2021-14

NEW RIVER TILTING WEIR STRUCTURE
ASCENSION PARISH LOUISIANA
EAST ASCENSION CONSOLIDATION GRAVITY DRAINAGE DISTRICT 1
ASCENSION PARISH
STRUCTURAL DETAILS

SHEET ID
S3

SHEET SET
21 OF 30

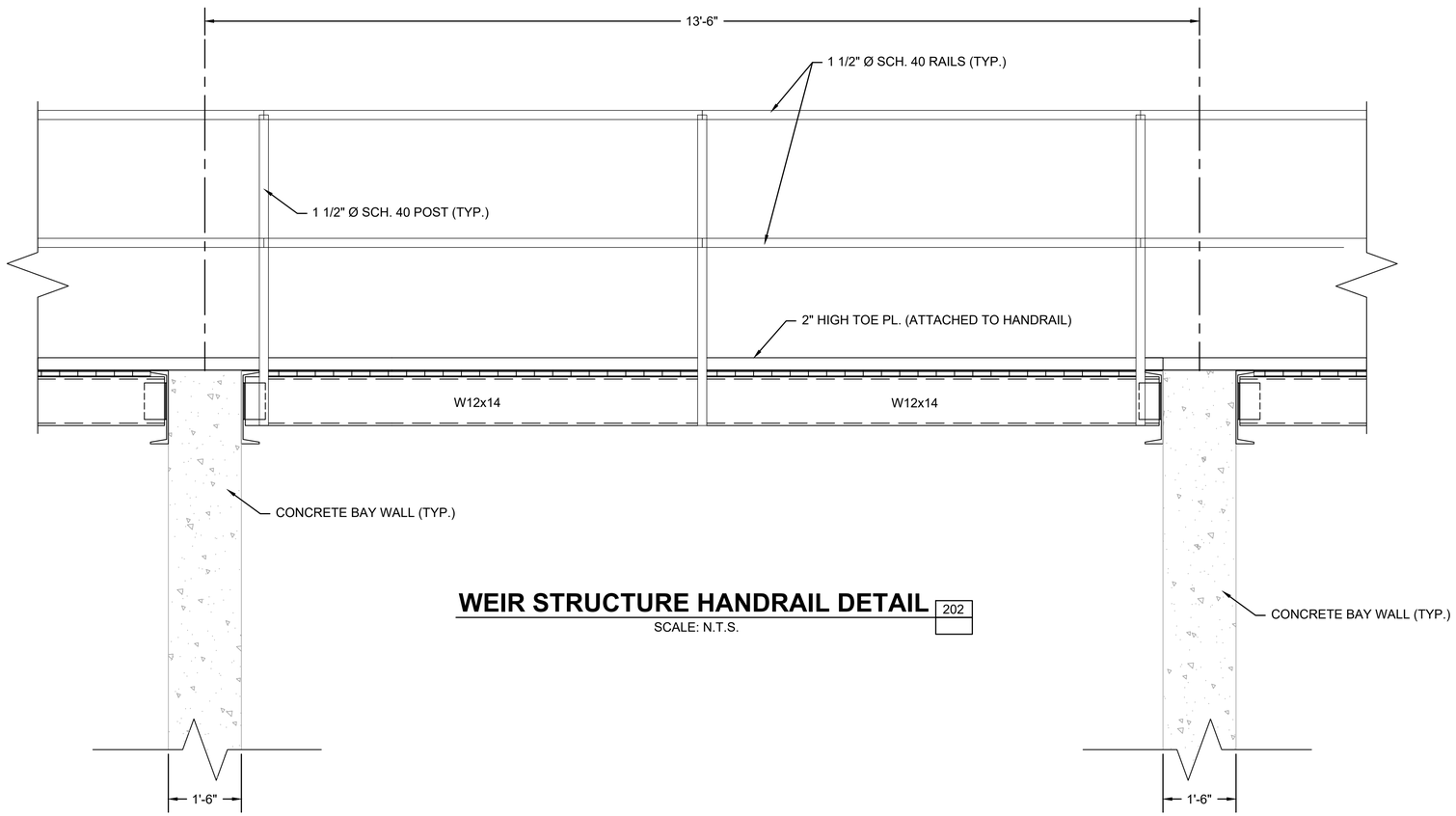

WEIR STRUCTURE HANDRAIL DETAIL 202

SCALE: N.T.S.

STATE OF LOUISIANA
HOWARD DAVIS COLE
License No. 31394
REGISTERED PROFESSIONAL ENGINEER
CIVIL ENGINEERING

WARNING

0 1/2 1

IF THIS BAR DOES NOT MEASURE 1" (BASED ON 22"X34" SHEET) THEN DRAWING IS NOT TO SCALE.

H. Davis Cole & Associates, LLC
Consulting Engineers
NEW ORLEANS, LA

MARK	DESCRIPTION	DATE	BY	CHK'D.
1	ADDENDUM #1	10/31/22	HDC	HDC

REVISION RECORD

DESIGNED BY: HDC
DRAWN BY: RM
CHECKED BY: HDC

DATE: Oct-22
DETAILED BY: RM
HDC PROJECT NO. 2021-14

NEW RIVER TILTING WEIR STRUCTURE
ASCENSION PARISH LOUISIANA
EAST ASCENSION CONSOLIDATION GRAVITY DRAINAGE DISTRICT 1
ASCENSION PARISH
STRUCTURAL DETAILS

SHEET ID
S4

SHEET SET
22 OF **30**