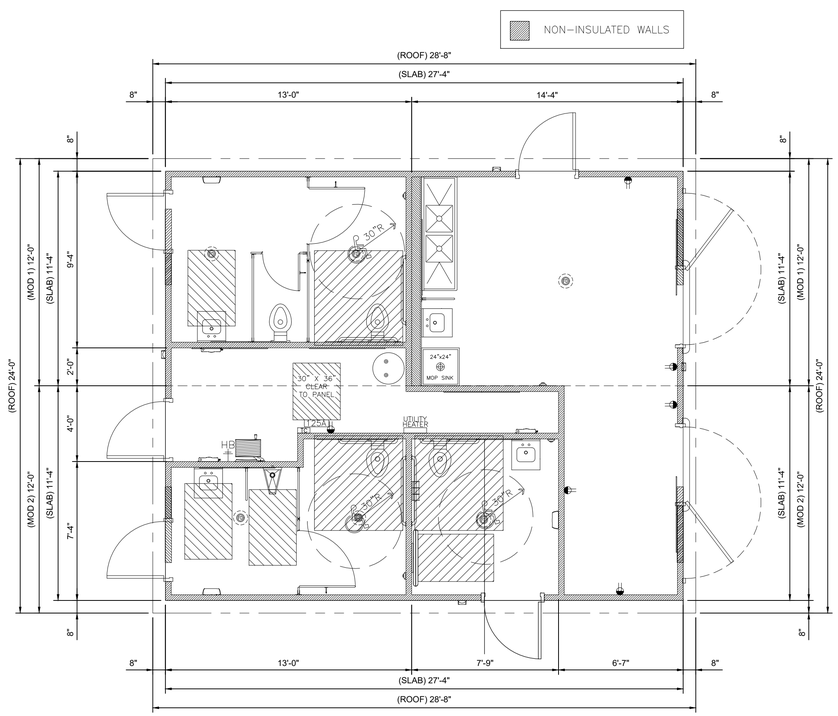

1 RESTROOM BUILDING PLAN VIEW

1/4" = 1'-0"

81-01

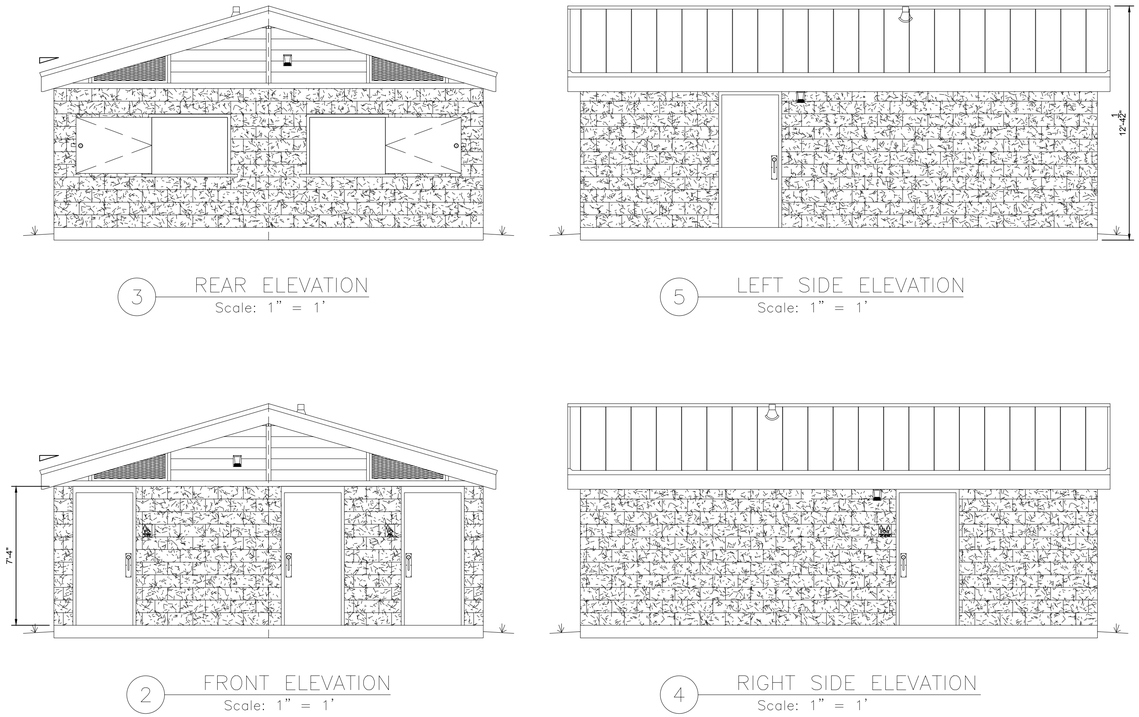

3 REAR ELEVATION
Scale: 1" = 1'

5 LEFT SIDE ELEVATION
Scale: 1" = 1'

2 FRONT ELEVATION
Scale: 1" = 1'

4 RIGHT SIDE ELEVATION
Scale: 1" = 1'

2 RESTROOM ELEVATIONS

1/4" = 1'-0"

81-02

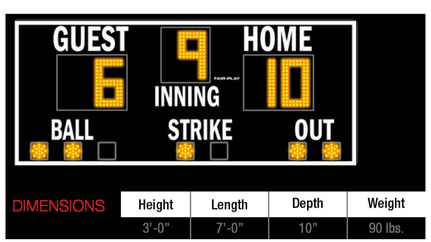

DIMENSIONS	Height	Length	Depth	Weight
	3'-0"	7'-0"	10"	90 lbs.

NOTE: SCORE BOARD TO BE MOUNTED ON STEEL POSTS, PER MANUFACTURER'S DIRECTIONS.

FAIR-PLAY
PRODUCT: 9'x4' BASEBALL SCORE BOARD
ITEM NUMBER: BA-7107-2

CONTACT: 1-800-247-0265 - WWW.FAIR-PLAY.COM

NOTE:
1. INSTALL PER MANUFACTURER'S INSTRUCTIONS.
2. CONTRACTOR SHALL PROVIDE STAMPED SHOP DRAWINGS WITH FOUNDATION DESIGN FOR REVIEW AND APPROVAL BY LANDSCAPE ARCHITECT.
3. ALTERNATE MANUFACTURERS:
   - ANY SUBMITTED ALTERNATE MUST BE FULLY COMPATIBLE WITH EXISTING FAIR-PLAY EQUIPMENT OWNED BY OWNER.

3 SCOREBOARD

1/2" = 1'-0"

79-29

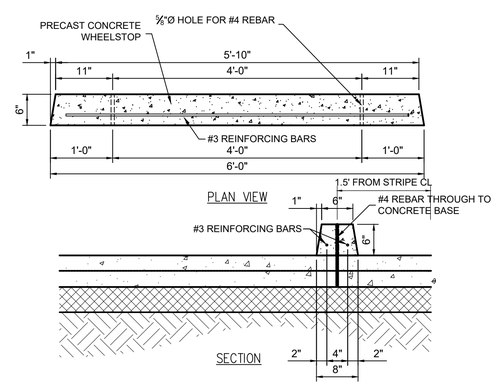

4 PRECAST CONCRETE WHEEL STOP

1" = 1'-0"

61-27

COR-WORTH RESTROOM FACILITIES
PRODUCT: RESTROOM / CONCESSION BUILDING
ITEM NUMBER: CUSTOM

CONTACT: 1-512-222-5454 - WWW.CORWORTH.COM

NOTE:
1. INSTALL PER MANUFACTURER'S INSTRUCTIONS.
2. CONTRACTOR SHALL PROVIDE STAMPED SHOP DRAWINGS WITH FOUNDATION DESIGN FOR REVIEW AND APPROVAL BY LANDSCAPE ARCHITECT.

UTILITY NOTE:

THE CONTRACTOR SHALL BE RESPONSIBLE FOR DETERMINING THE EXACT LOCATION, DEPTH AND SIZE OF ALL UNDERGROUND UTILITIES AND STRUCTURES AND SHALL BE LIABLE FOR ANY DAMAGE CAUSED BY FAILURE TO COMPLY WITH THESE INSTRUCTIONS.

Louisiana 811

BY LAW, ANYONE PLANNING MECHANIZED DIGGING OR EXCAVATION WORK IN LOUISIANA MUST NOTIFY LOUISIANA ONE CALL BY CALLING 811 OR 1-800-272-3020 OR BY GOING TO THEIR WEBSITE AT WWW.LOUISIANA811.COM AT LEAST TWO FULL BUSINESS DAYS PRIOR TO THE PROJECTS START DATE.

REV1: BID ADDENDUM 2 (2024-10-23)
WHEELSTOP DETAIL

Client:
PARISH OF ASCENSION GOVERNMENT
615 E WORTHEY ST.
GONZALES, LA

Project:
PRAIRIEVILLE PARK RENOVATIONS
38430 LA-929
PRAIRIEVILLE, LA

Title:
DETAILS

Description:
LOCATED IN
SECTION 38, TOWNSHIP 8 S, RANGE 2E,
South Eastern East of the Mississippi,
ASCENSION PARISH, LOUISIANA

DWG Path: P:\-2023 Projects\23-270 - Prairieville Park Renovations\2 - Landscape Architecture\1_Drawings\Cds\23-270_05-01.dwg

QUALITY ENGINEERING & SURVEYING
18320 Hwy 42 Port Vincent, LA 70726
225.698.1600 | www.qesla.com | info@qesla.com

Stamp:
STATE OF LOUISIANA
COMASTIA TAYLOR
REG. NO. 1-226
LICENSED LANDSCAPE ARCHITECT
NOT FOR CONSTRUCTION
10-02-2024

Drawn By: TT
Date: OCTOBER 2024
Project No.: 23-270
Sheet: L6.3